QN, QNH, HQN Circuit Breakers

FEATURES

- Plug-on branch circuit breaker for Siemens circuit breaker enclosures and metering
- UL Listed
- Require 4 panel spaces, 2 adjacent and 2 opposite
- Available with interrupting rating of 10kA, 22kA or 65kA
- 120/240V AC
- Wire range #4 – 300 kcmil Cu/Al
- Shunt trip available, use 00S01 suffix for ordering
- Padlocking device available, use catalog number QLN3

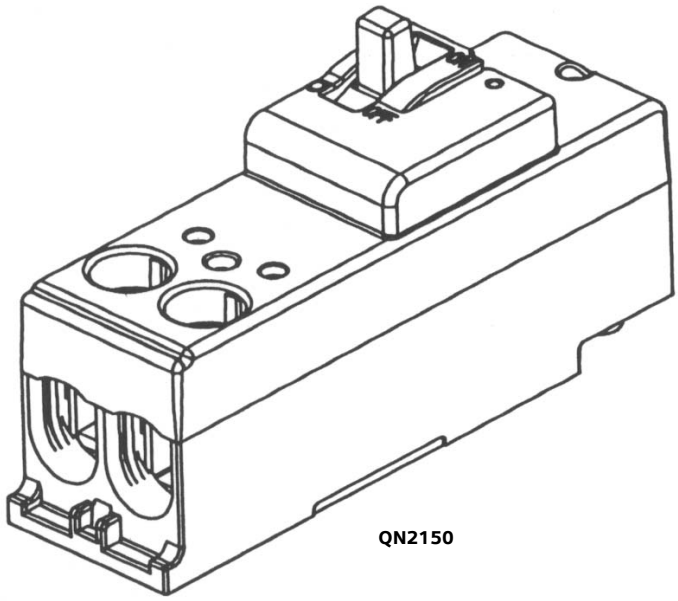

QN2150

Catalog Number	Amps	Interrupting Rating	UL Type
QN2150	150	10kA	QN
QN2175	175	10kA	QN
QN2200	200	10kA	QN
QN2150H	150	22kA	QNH
QN2175H	175	22kA	QNH
QN2200H	200	22kA	QNH
HQN2150	150	65kA	HQN
HQN2175	175	65kA	HQN
HQN2200	200	65kA	HQN

fastfax

SIEMENS

QN, QNH, HQN Circuit Breakers

QN, QNH & HQN Series Ratings
120/240V 2 Breaker Series

Branch Breaker			Main Breaker or Fuse			Interrupting Rating		
UL Type	**Amps**	**Poles**	**UL Type**	**Amps**	**Poles**	**RMS Symm Amps**	**Volts**	**Phase**
QP,BQ,BL	15- 70	1	QNH	150-200	2	22,000	120/240	1
QP,BQ,BL	15-125	2	QNH	150-200	2	22,000	120/240	1
QT	15- 50	1, 2	QNH	150-200	2	22,000	120/240	1
QAF,BQAF,BAF	15- 20	1	QNH	150-200	2	22,000	120	1
QPF,BQF,BLF	15- 30	1	QNH	150-200	2	22,000	120	1
QPF,BLF	15- 60	2	QNH	150-200	2	22,000	120/240	1
QE,BE,BLE	15- 30	1	QNH	150-200	2	22,000	120	1
QE,BE,BLE	15- 60	2	QNH	150-200	2	22,000	120/240	1
QP,BQ,BL	15- 70	1	HQN	150-200	2	65,000	120/240	1
QP,BQ,BL	15-125	2	HQN	150-200	2	65,000	120/240	1
EQ967#	100-125	2	HQN	150-200	2	65,000	120/240	1
QT	15- 50	1, 2	HQN	150-200	2	65,000	120/240	1
QAF,BQAF,BAF	15- 20	1	HQN	150-200	2	65,000	120	1
QPF,BQF,BLF	15- 30	1	HQN	150-200	2	65,000	120	1
QPF,BLF	15- 60	2	HQN	150-200	2	65,000	120/240	1
QE,BE,BLE	15- 30	1	HQN	150-200	2	65,000	120	1
QE,BE,BLE	15- 60	2	HQN	150-200	2	65,000	120/240	1
QPH,BQH,BLH	15- 70	1	HQN	150-200	2	65,000	120/240	1
QPH,BQH,BLH	15-125	2	HQN	150-200	2	65,000	120/240	1
QAFH,BQAFH	15- 20	1	HQN	150-200	2	65,000	120	1
BAFH	15- 20	1	HQN	150-200	2	65,000	120	1
QPHF,BQHF	15- 30	1	HQN	150-200	2	65,000	120	1
BLHF	15- 30	1	HQN	150-200	2	65,000	120	1
QPHF,BLHF	15- 60	2	HQN	150-200	2	65,000	120/240	1
QEH,BLEH	15- 30	1	HQN	150-200	2	65,000	120	1
QEH,BLEH	15- 60	2	HQN	150-200	2	65,000	120/240	1
EQ868#	100	2	HQN	150-200	2	65,000	120/240	1
EQ968#	150-200	2	HQN	150-200	2	65,000	120/240	1
EQ869#	150-200	2	HQN	150-200	2, 3	65,000	120/240	1
QN,QNH	150-200	2	FD6,FXD6	70-250	2, 3	65,000	120/240	1
QN,QNH	150-200	2	FD6-A,FXD6-A	70-250	2, 3	65,000	120/240	1
QN,QNH	150-200	2	JXD2-A	200-400	2, 3	65,000	120/240	1
QN,QNH	150-200	2	JXD2	200-400	2, 3	65,000	120/240	1
QN,QNH	150-200	2	JD6-A,JXD6-A	200-400	2, 3	65,000	120/240	1
QN,QNH	150-200	2	JD6,JXD6	200-400	2, 3	65,000	120/240	1
QN,QNH	150-200	2	LD6-A	200-600	2, 3	65,000	120/240	1
QN,QNH	150-200	2	LD6	200-600	2, 3	65,000	120/240	1
QN,QNH	150-200	2	LXD6-A	450-600	2, 3	65,000	120/240	1
QN,QNH	150-200	2	LXD6	450-600	2, 3	65,000	120/240	1
QN,QNH	150-200	2	MD6,MXD6	500-800	2, 3	65,000	120/240	1
QN,QNH	150-200	2	ND6,NXD6	500-1200	2, 3	65,000	120/240	1
QN,QNH	150-200	2	PD6,PXD6	1200-1600	3	65,000	120/240	1
QN,QNH	150-200	2	RD6,RXD6	1600-2000	3	65,000	120/240	1
QN,QNH	150-200	2	J,R	150-600	2, 3	65,000	120/240	1
QN,QNH	150-200	2	T	150-1200	2, 3	65,000	120/240	1
QN,QNH	150-200	2	L	601-6000	2, 3	65,000	120/240	1

For 120/240V 3 and 4 Breaker Series information please contact your local sales representative.
NOTE: Series ratings are only valid if rating is marked on load center.

QN, QNH, HQN Circuit Breakers

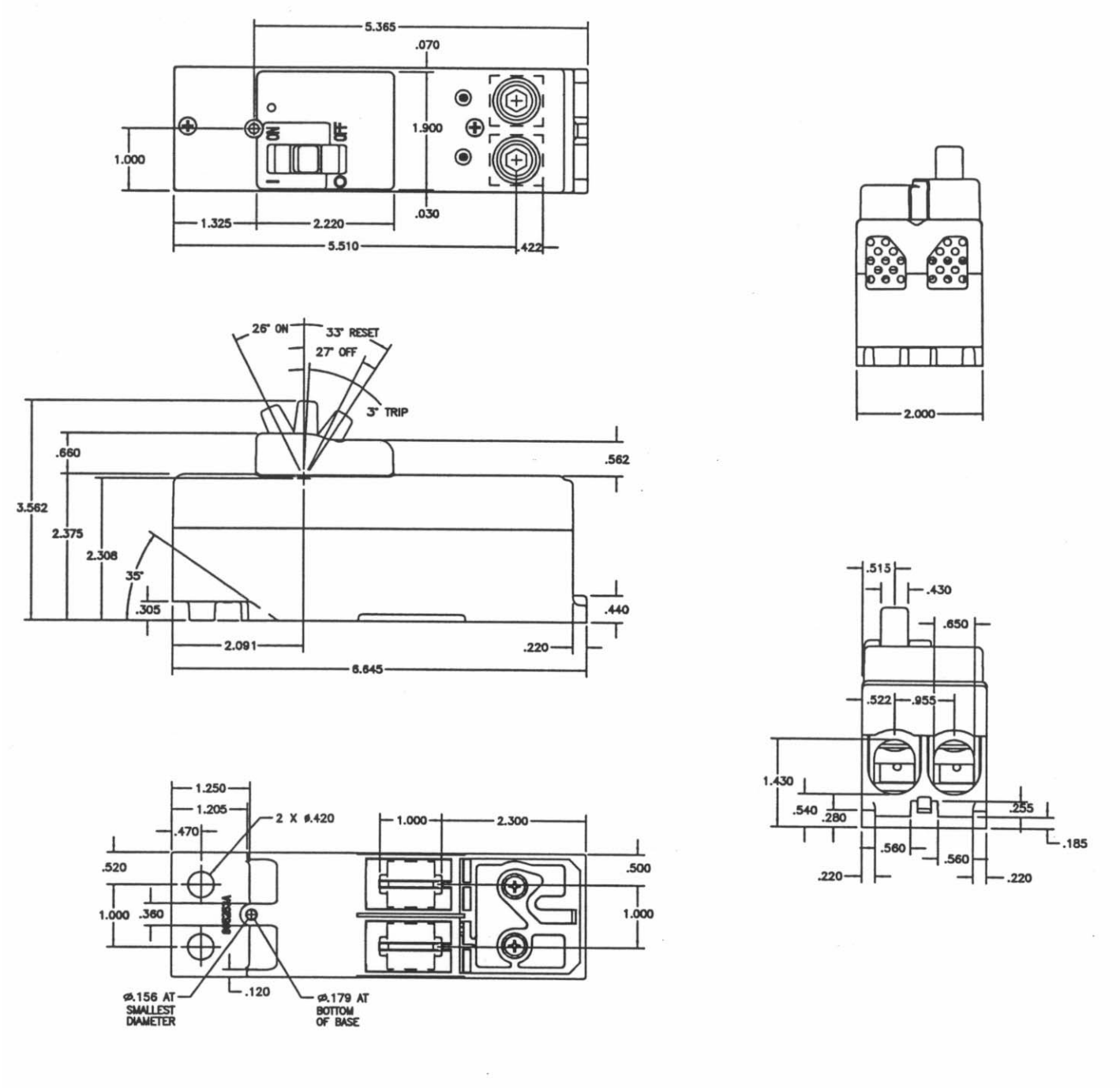

Siemens Energy & Automation, Inc.
3333 Old Milton Parkway
Alpharetta, GA 30005

1-800-964-4114
www.sea.siemens.com/reselec

©2002 Siemens Energy & Automation, Inc. All Rights Reserved.

Siemens is a registered trademark of Siemens AG. Product names mentioned may be trademarks or registered trademarks of their respective companies. Specifications are subject to change without notice.

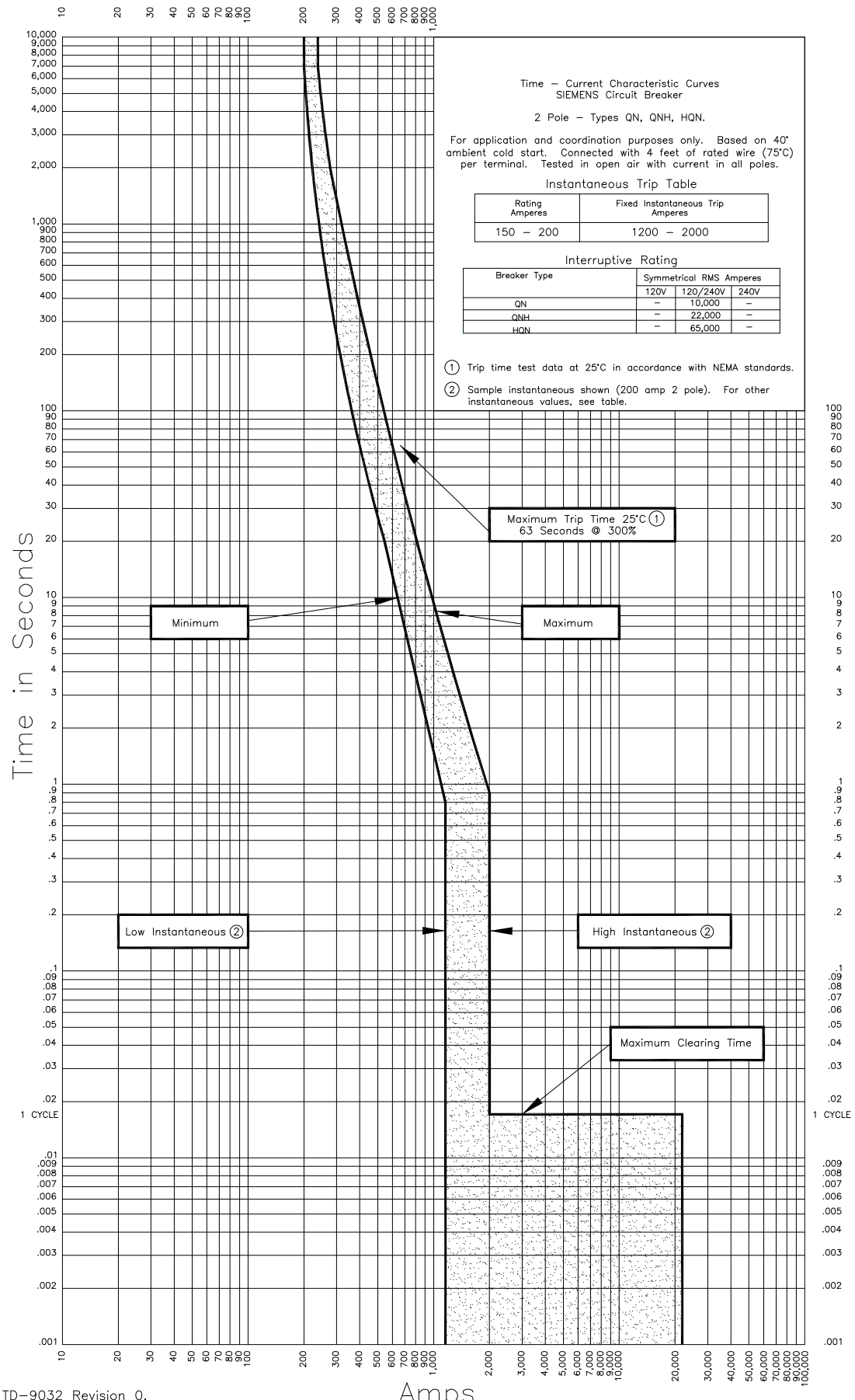

TD–9032 Revision 0.
Sheet 1 of 1
August 2002

Siemens Energy & Automation Inc.