SIEMENS

Product data sheet 3RA1316-8XB30-1BB4



REVERSING CONTACTOR COMBINATION AC-3 4KW/400 V,
3-POLE, SIZES00 SCREW CONNECTION,
DC 24 V, EL. AND MECH. LOCKING DEVICE

General details:		
Product function		reversing contactor
Size of the contactor		S00
Width	mm	90
Height	mm	67
Depth	mm	72
Item designation		
• according to DIN EN 61346-2		Q
• according to DIN 40719 extendable after IEC 204-2 / according to IEC 750		K

Control circuit:		
Type of voltage / of the controlled supply voltage		DC
Control supply voltage / 1		
• for DC		
• rated value	V	24

Main circuit:		
Operational current / at AC-3 / at 400 V		
• rated value	A	9
Service power / at AC-3 / at 400 V		

subject to modifications
© Copyright Siemens AG 2013

• rated value	kW	4

Auxiliary circuit:

Number of NC contacts / for auxiliary contacts / per direction of rotation		0
Number of NO contacts / for auxiliary contacts / per direction of rotation		0

Connection type:

Design of the electrical connection / for main current circuit		screw-type terminals
Type of mounting		screw and snap-on mounting onto 35 mm standard mounting rail according to DIN EN 50022

Ambient conditions:

Ambient temperature		
• during operating	°C	-25 … +60
Protection class IP / on the front		IP20

Certificates/approvals:

General Product Approval			Declaration of Conformity	Test Certificates
CSA	GOST	UL	EG-Konf.	Special Test Certificate

Shipping Approval					
BUREAU VERITAS	DNV	GL	LRS	PRS	RINA

Shipping Approval	other	
RMRS	other	Environmental Confirmations

Further information:

Information- and Downloadcenter (Catalogs, Brochures,…)
http://www.siemens.com/industrial-controls/catalogs

Industry Mall (Online ordering system)
http://www.siemens.com/industrial-controls/mall

CAx-Online-Generator
http://www.siemens.com/cax

Service&Support (Manuals, Certificates, Characteristics, FAQs,...)
http://support.automation.siemens.com/WW/view/en/3RA1316-8XB30-1BB4/all

Image database (product images, 2D dimension drawings, 3D models, device circuit diagrams, ...)
http://www.automation.siemens.com/bilddb/cax_en.aspx?mlfb=3RA1316-8XB30-1BB4

© Copyright Siemens AG 2013

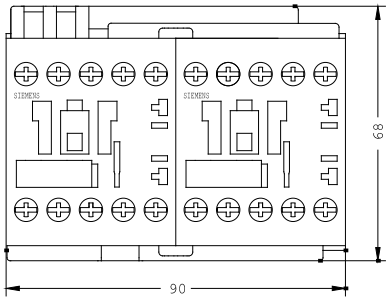

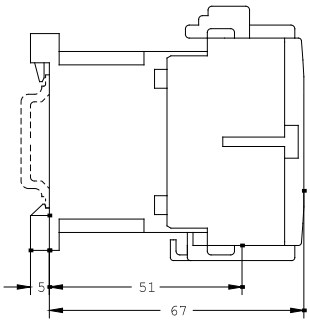

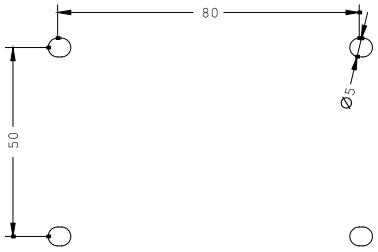

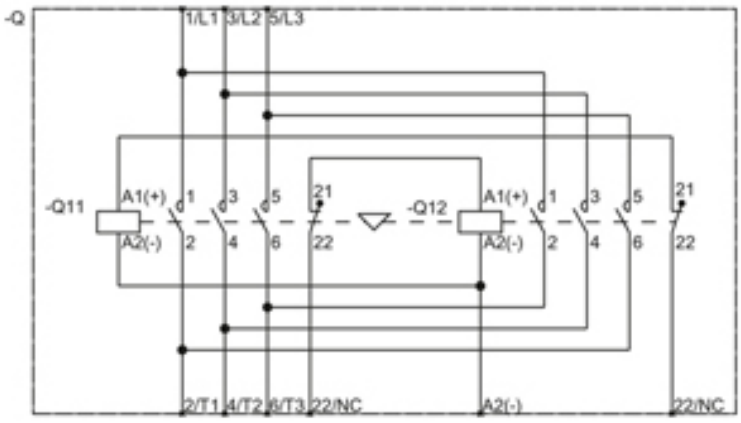

last change: Feb 26, 2013

© Copyright Siemens AG 2013