© Siemens AG 2016

SIEMENS



Monitoring Devices

SENTRON

Configu-
ration
Manual

Edition
10/2015

siemens.com/lowvoltage

www.datasheet.support

© Siemens AG 2016

© Siemens AG 2016

Monitoring Devices



2 **Introduction**

Monitoring devices for electrical values

5 5SV8 residual current monitors
11 5TT3 voltage relays
19 5TT3 voltage and frequency relays
22 5TT6 current relays
27 5TT3 reverse power relays
28 5TT3 fuse monitors
29 5TT3 phase and phase sequence monitors
31 5TT3 insulation monitors for industrial applications
34 7LQ3 monitors for medical premises

Monitoring devices for plants and equipment

53 5TT3 fault signaling units
55 5TT5 EMERGENCY STOP modules
57 5TT3 level relays
59 5TT3 line circuit relays
60 5TT3 p.f. monitors
62 5TT3 motor protection relays

For further technical product information:

Siemens Industry Online Support:
www.siemens.com/lowvoltage/product-support

→ Entry type:
- Application example
- Certificate
- Characteristic
- Download
- FAQ
- Manual
- Product note
- Software archive
- Technical data

© Siemens AG 2016

Introduction

Overview

Devices		Page	Application	Standards	Used in		
					Non-residential buildings	Residential buildings	Industry
Monitoring devices for electrical values							
	**5SV8 residual current monitors**	5	To increase system availability and operating safety through continuous monitoring of residual current in electrical systems and signaling if a defined threshold is exceeded.	IEC 62020; EN 62020	✓	--	✓
	**Modular residual current devices (MRCD)**	5	The MRCD is a modular residual current device type for personnel and fire protection.	DIN EN 60947-2 (Appendix M), IEC 60947-2 (Appendix M)	✓	--	✓
	**5TT3 voltage relays**	11	Monitoring the voltage of emergency lighting in public buildings, short-time failures of 20 ms, for ensuring operational parameters for devices or system components or monitoring the neutral conductor for breaks.	IEC 60255; DIN VDE 0435-303; DIN VDE 0108; DIN VDE 0435; DIN VDE 0633	✓	--	✓
	**5TT3 voltage and frequency relays**	19	The voltage and frequency relay monitors the status of the grid in the case of in-plant generation systems. Violation of an upper or lower limit results in shutdown and disconnection of the generation system from the grid. This ensures a stable incoming supply system.	IEC/EN 60255-1; IEC/EN 61000; VDE-AR-N-4105	✓	✓	✓
	**5TT6 current relays**	22	Monitoring of emergency and signal lighting and motors. All current relays can be short-time overloaded and connected either with direct measurement or through transformers.	IEC 60255; DIN VDE 0435-303	✓	--	✓
	**5TT3 reverse power relays**	27	Reverse power relays are used in power supply systems, e.g. photovoltaic, wind power, water power and unit-type cogenerating stations, to control the reverse power. They prevent voltage being returned from the grid and causing damage if the infeed system itself fails or is damaged.	IEC 50255; DIN VDE 0435-303	✓	✓	✓

© Siemens AG 2016

Devices		Page	Application	Standards	Used in		
					Non-residential buildings	Residential buildings	Industry
	**5TT3 fuse monitors**	28	Monitoring of all types of low-voltage fuses. Can be used in asymmetric systems afflicted with harmonics and regenerative feedback motors.	IEC 60255; DIN VDE 0435	✓	--	✓
	**5TT3 phase and phase sequence monitors**	29	For the visual signaling of phase failures or phase sequences in three-phase systems. The phase sequence is arbitrary. The device is also suitable for 1, 2 or 3-phase operation.	IEC 60255; DIN VDE 0435	--	--	✓
	**5TT3 insulation monitors for industrial applications**	31	To increase system availability and operating safety through continuous monitoring of the isolation resistance in non-grounded direct voltage or AC voltage systems.	IEC 60255; IEC 61557	--	--	✓
	**7LQ3 monitors for medical premises**	34	For the insulation monitoring of a medical IT system or load current monitoring of an IT system transformer for a non-permissible temperature rise. Monitoring of the voltage supply with automatic switchover.	EN 61557-8; IEC 61557-8; DIN VDE 0100-710; IEC 60364-7-710	✓	--	--
Monitoring devices for plants and equipment							
	**5TT3 fault signaling units**	53	Evaluation and display of fault alarms and alarm signals for monitoring industrial plants and control systems. With 4 inputs and connections for 39 expansion fault signaling units.	IEC 60255, DIN VDE 0435-303	✓	--	✓
	**5TT5 EMERGENCY STOP modules**	55	For EMERGENCY-OFF switching in accordance with the Directive 98/37/EC on Safety of Machines. Safe types of circuits for machines, plants or test stations in industrial, commercial and private enterprise applications.	According to the Machinery Directive 98/37/EC; EN 954-1	✓	--	✓

© Siemens AG 2016

Monitoring Devices

Introduction

Devices		Page	Application	Standards	Used in		
					Non-residential buildings	Residential buildings	Industry
	**5TT3 level relays**	57	Control of liquid levels in containers with 3 electrode connections for 1-step and 2-step level control. High immunity to interference of the measuring circuit isolated from the system.	IEC 60255, DIN VDE 0435	✓	--	✓
	**5TT3 line circuit relays**	59	For disconnecting the voltage of unused lines when loads are disabled.	IEC 60255, DIN VDE 0435	--	✓	--
	**5TT3 p.f. monitors**	60	For the monitoring of asynchronous motors for underload and no-load operation, e.g. fan monitoring in the case of V-belt breakage, filter blockages, pump monitoring in the event of valve closure or dry runs.	IEC 60255, IEC 61557	--	--	✓
	**5TT3 motor protection relays**	62	For the prevention of thermal motor overloads, e.g. due to high switching frequency, single-phasing, disabled cooling or excessive ambient temperatures. With detection of wire breaks in the sensor circuit.	IEC 60255, DIN VDE 0435	--	--	✓

© Siemens AG 2016

Overview

Plant and operating safety are becoming increasingly important alongside the protection of personnel. Shutdowns due to the unexpected tripping of protective devices cause high costs. However, it is possible to detect residual currents in the electrical installation before the protective device responds.

Residual current devices (RCD)

Residual current monitors (RCM) monitor residual current in electrical installations and issue a signal when the residual current exceeds a set value.

RCMs are used primarily in plants where a fault should result in a signal, but not in disconnection. This enables plant operators to detect faults and eliminate their causes before the protective devices disconnect the installation, which increases plant and operating safety and cuts costs.

Modular residual current devices (MRCD)

Modular residual current devices (MRCD) monitor residual currents in electrical systems and trip the MCCB via a shunt or UVR after an adjustable advance warning if the residual current exceeds a defined value. See accessories for molded case circuit breakers in Catalog LV 10, chapter "Molded case circuit breakers".

This makes it possible for you to offer molded case circuit breakers with personnel and fire protection in compliance with EN 60947-2 (Appendix M) (also as a retrofit).

Summation current transformer

The summation current transformer detects all conductors required to conduct the current, including the neutral conductor where applicable. In a fault-free system, the magnetizing effects of the conductors through which current is flowing cancel each other out for the summation current transformer, i.e. the sum of all currents is zero. If a residual current is flowing due to an insulation fault, a residual magnetic field is left in the core of the transformer and produces a voltage. This voltage is evaluated using the electronics of the RCM/MRCD. The switched contact can be used to operate an acoustic/optical signaling device, a higher-level control system or a circuit breaker for example.

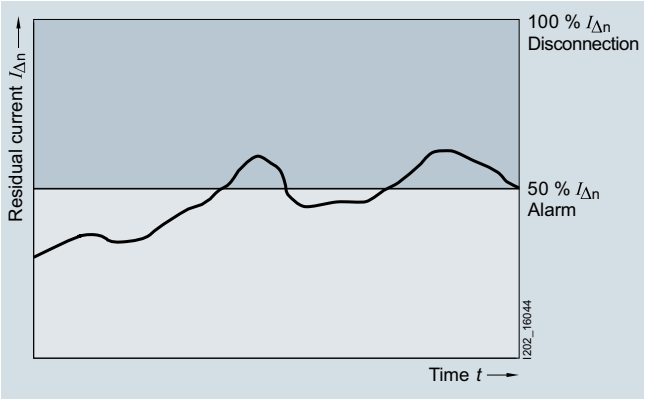

Time characteristic of the rated residual current $I_{\Delta n}$

Benefits

- Higher plant availability and operating safety through permanent monitoring of residual currents
- Adjustable limit values for residual current and response time enable timely detection and signaling – plant shutdowns are often avoidable
- Devices for every application:
  The summation current transformers are available in various sizes; the RCMs can be used optionally for signaling and/or switching
- Additional fire protection can be implemented using the monitoring system

© Siemens AG 2016

Technical specifications

		5SV8000-6KK	5SV8001-6KK	5SV8200-6KK	5SV8101-6KK
Standards		EN 62020, IEC 62020			DIN EN 60947-2 (Appendix M), IEC 60947-2 (Appendix M)
Approvals			UL		--
Rated operational voltage U_e	V AC	230			230 from a 1-phase auxiliary voltage source (also externally)
• Frequency	Hz	50/60			
Rated residual current $I_{\Delta n}$					
• Type A	A	0.03 ... 3	0.03 ... 3	0.03 ... 3	0.03 ... 3 (default setting: 30 mA)
• Type AC	A	>3	5 ... 30	5 ... 30	--
Response time Δt	s	0.02 ... 5	0.02 ... 10, INS, SEL[1]	0.02 ... 10, INS, SEL[1]	$I_{\Delta n}$ = 30 mA: INS instantaneous $I_{\Delta n}$ > 30 mA: INS - SEL - 0,06 ... 10[1] (default setting INS)
Relay contacts		1 × alarm	1 × pre-alarm, 1 × alarm	1 × pre-alarm, 4 × alarm	1 × alarm, 1 × tripping operation
• Rated voltage	V AC	230	230	230	230
• Rated current	A	6	6	6	6
Summation current transformer	mm ∅	20 ... 210			35 ... 210
Maximum cable length RCM/CT (shielded cable)	m	10			
Conductor cross-section	mm^2	1.5			0.125 ... 2.08
Test/Reset		Yes/Yes			
External tripping operation/ external reset		--/Yes	Yes/Yes	Yes/Yes	Yes/Yes
Mounting width	MW	2	3	3	3
Degree of protection					
• Contacts		IP20			
• Front		IP41			
Operating temperature	°C	-10 ... +50			

[1] INS: Instantaneous, SEL: Selective.

© Siemens AG 2016

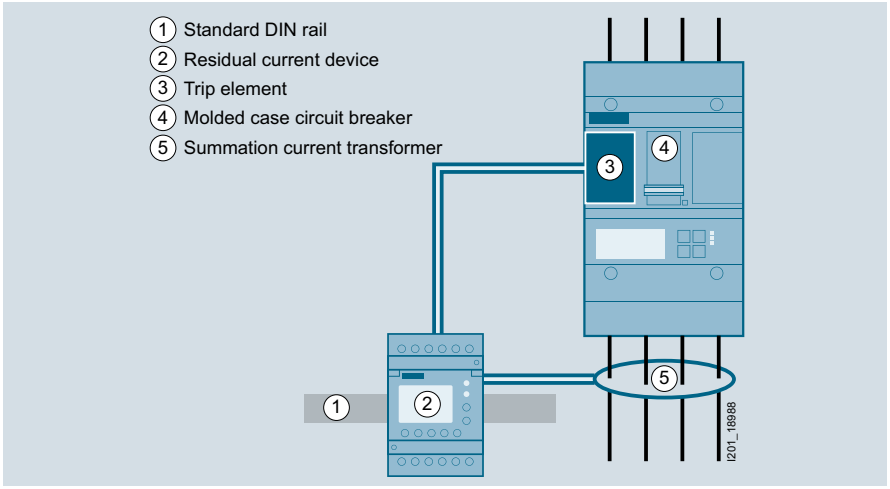

5SV8101-6KK (approved configurations)				
2	5SV8101-6KK			
1	EN 60715 - TH35 - 7.5 35 - 15			
5	5SV8702-0KK 5SV8703-0KK 5SV8704-0KK 5SV8705-0KK 5SV8706-0KK	35 mm 70 mm 105 mm 140 mm 210 mm		5SV8902-1KK 5SV8903-1KK 5SV8904-1KK 5SV8905-1KK 5SV8906-1KK
4			3	3
3VL17...			3VL9400-1ST00	3VL9400-1UP00
3VL27...			3VL9400-1ST00	3VL9400-1UP00
3VL37...			3VL9400-1ST00	3VL9400-1UP00
3VL47...			3VL9400-1ST00	3VL9400-1UP00
3VA20... 3VA21... 3VA22...			3VA9988-0BL30 3VA9988-0BL32 3VA9988-0BL33	3VA9908-0BB11 3VA9908-0BB20 3VA9908-0BB24 3VA9908-0BB25
3VA10... 3VA11...			3VA9988-0BL30 3VA9988-0BL32 3VA9988-0BL33	3VA9908-0BB11 3VA9908-0BB20 3VA9908-0BB24 3VA9908-0BB25

Dimensional drawings

Residual current monitor

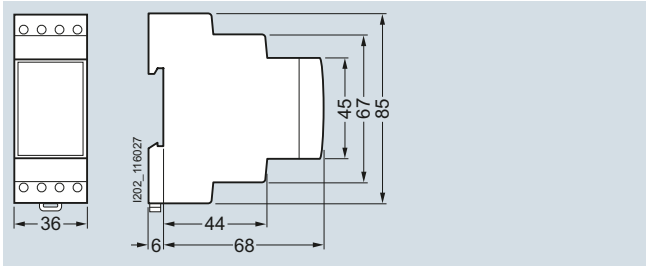

RCM analog, 5SV8000-6KK

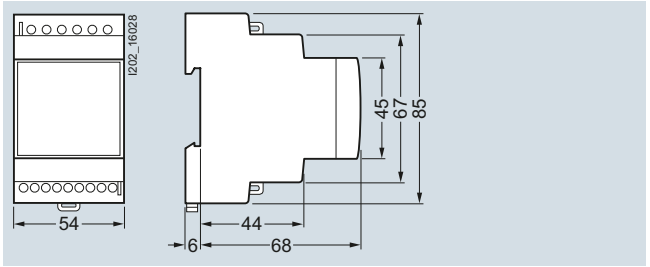

RCM digital, 5SV8001-6KK, 5SV8200-6KK, MRCD, 5SV8101-6KK

© Siemens AG 2016

5SV8 residual current monitors

Summation current transformer

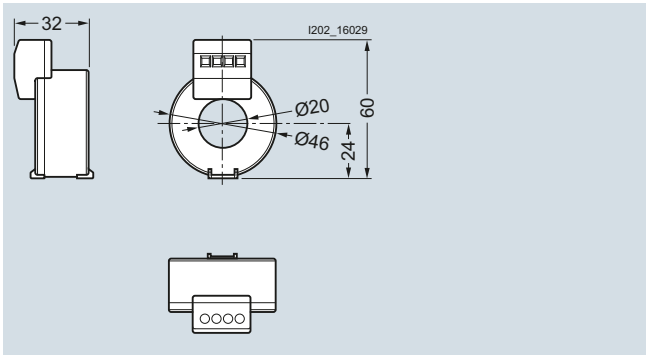

Summation current transformer, 5SV8700-0KK

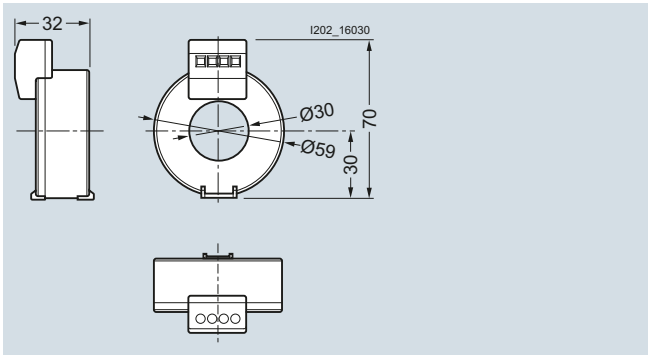

Summation current transformer, 5SV8701-0KK

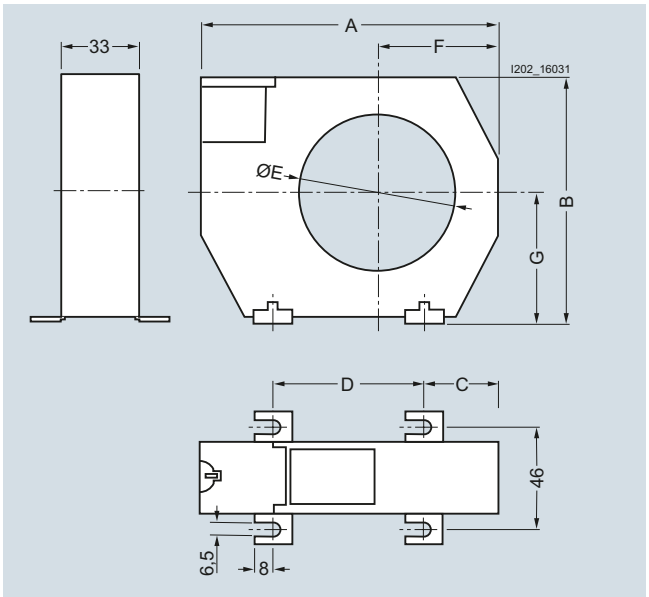

Summation current transformer, 5SV8702-0KK, 5SV8703-0KK, 5SV8704-0KK, 5SV8705-0KK, 5SV8706-0KK

Type	Dimensions	A	B	C	D	E	F	G
5SV8702-0KK		100	79	26	49	35	35	43
5SV8703-0KK		130	110	32	66	70	52	57
5SV8704-0KK		170	146	38	94	105	72	73
5SV8705-0KK		230	196	49	123	140	97	98
5SV8706-0KK		299	284	69	161	210	141	142

Type	Rated current	Maximum current[1)]
5SV8700-0KK	≤ 40 A	240 A
5SV8701-0KK	≤ 63 A	380 A
5SV8702-0KK	≤ 80 A	480 A
5SV8703-0KK	≤ 200 A	1200 A
5SV8704-0KK	≤ 250 A	1500 A
5SV8705-0KK	≤ 500 A	3000 A
5SV8706-0KK	≤ 600 A	3600 A

[1)] Transient starting current, up to max. 2s

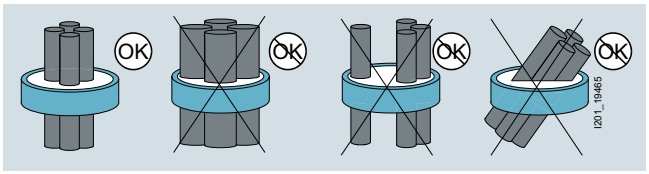

Summation current transformer, 5SV8702-0KK, 5SV8703-0KK, 5SV8704-0KK, 5SV8705-0KK, 5SV8706-0KK

All active conductors (including the neutral) must be routed through the transformer. Cables that are not routed through the transformer must keep to a minimum clearance of 20 cm. Moreover, the transformers must have an inside diameter that is at least 1.5 times larger than the outside diameter of the conductors that pass through it.

© Siemens AG 2016

Circuit diagrams

Residual current monitor

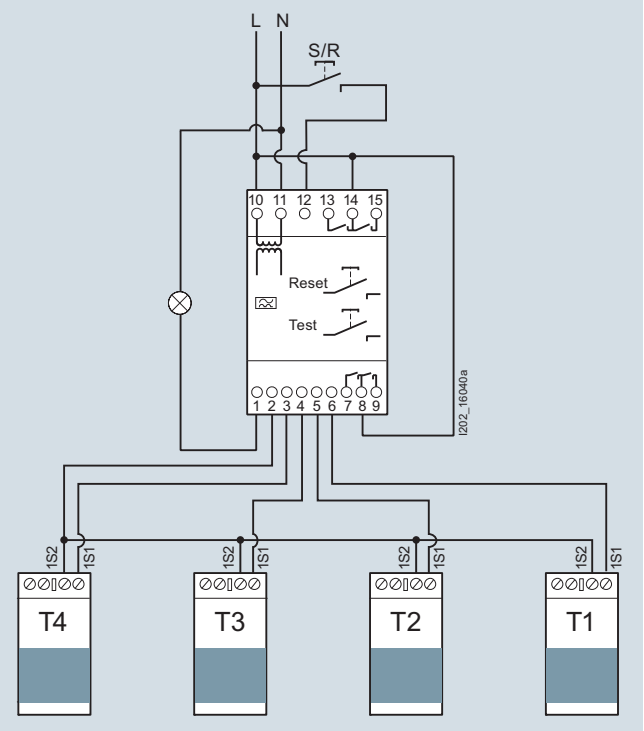

RCM digital, 4 channels, 5SV8200-6KK

S/R = Set/Reset

More information

Switch positions

RCM digital, 5SV8001-6KK:

Setting	Alarm contact/alarm "Standard"	Trip contact/trip "Standard"	Alarm contact/alarm "+"	Trip contact/trip "+"
Without power supply	4 — 5 / 6	15 — 14 / 13	4 — 5 / 6	15 — 14 / 13
With power supply	4 — 5 / 6	15 — 14 / 13	4 — 5 / 6	⎍
Over limit	4 — 5 / 6	⎍	4 — 5 / 6	15 — 14 / 13
CT disconnection	4 — 5 / 6	⎍	4 — 5 / 6	15 — 14 / 13

© Siemens AG 2016

5SV8 residual current monitors

RCM digital, 4 channels, 5SV8200-6KK:

Setting	Alarm contact/alarm "Standard"	Trip contacts/trip "Standard"	Trip contacts/trip "+"
Without power supply		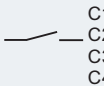	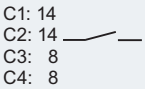
With power supply		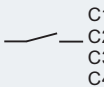	
Over limit	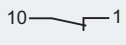	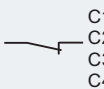	
CT disconnection	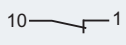	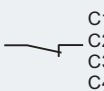	

© Siemens AG 2016

Overview

Voltage relays are used for device and plant protection, supplying safety light devices and the detection of N-conductor breaks and short-time voltage interruptions.

They are available as undervoltage, overvoltage and under / overvoltage relays. The devices are equipped with different functions, depending on their intended use, and comply with the pertinent regulations.

Technical specifications

			5TT3400 5TT3401 5TT3402 5TT3403	5TT3404 5TT3405	5TT3406	5TT3194	5TT3195
Standards			IEC 60255; DIN VDE 0435-110, -303				
Rated operational voltage U_c		V AC	230/400				400
Operating range (overload capability)		× U_c	1.1			1.35	
Rated frequency		Hz	50/60				
Response values	ON-switching OFF-switching	× U_c	0.9/0.95 0.7/0.85		4 % hysteresis 0.7 ... 0.95	0.9 ... 1.3	
Minimum contact load		V; mA	10; 100				
Phase asymmetry	Setting accuracy Repeat accuracy	% %	-- --	Approx. 5 ... 10 1		-- --	Approx. 5 ... 10 1
Phase failure detection	At L1 or L2 or L3	ms	100			--	
N-conductor monitoring			--	Yes		--	
Rated insulation voltage U_i	Between coil/contact	kV	4				
Contacts	μ contact (AC-11)	A	4				
Electrical isolation	Creepage distances and clearances Actuator/contact	 mm	 3	 5.5			
Rated impulse withstand voltage U_{imp}	Actuator/contact	kV	> 2.5	> 4			
Terminals	± Screw (Pozidriv)		1				
Conductor cross-sections • Rigid, max. • Flexible, with end sleeve, min.		 mm^2 mm^2	 2 × 2.5 0.5				
Permissible ambient temperature		°C	-20 ... +60				
Climatic withstand capability	Acc. to EN 60068-1		20/60/4				

			5TT3196
Standards			IEC 60255; DIN VDE 0435
Rated operational voltage U_c		V DC	24
Rated power loss P_v • Coil/drive • Contacts[1] per pole		 VA VA	 0.6 0.8
Hysteresis		%	4
Response values × U_c • Undervoltage • Overvoltage	 Undervoltage Overvoltage		 0.82 1.18
Residual ripple tripping ΔU_c	Infinitely variable	%	0 ... 15
Overload capability	33 V DC 35 V DC 45 V DC	 ms ms	Continuous 500 10
Creepage distances and clearances		mm	4
Rated impulse withstand voltage U_{imp}	Input/output	kV	> 2.5
Minimum contact load		V/mA	24/300
Rated operational current I_e	AC-11 AC-1	A A	1 4
Contacts			μ contact
Electrical service life	In switching cycles at I_e		5×10^5
Terminals	± Screw (Pozidriv)		1
Conductor cross-sections • Rigid, max. • Flexible, with end sleeve, min.		 mm^2 mm^2	 2 × 2.5 1 × 0.5
Permissible ambient temperature		°C	-20 ... +60
Climatic withstand capability	Acc. to EN 60068-1		20/60/4

[1] For rated operational current.

© Siemens AG 2016

5TT3 voltage relays

			5TT3407	5TT3408	5TT3410
Standards			IEC 60255; DIN VDE 0435-303		
Rated operational voltage U_c		V AC	230/400		
Operating range (overload capability)		× U_c	1.1	1.35	1.2
Rated frequency		Hz	50/60		
Back-up fuse	Terminals L1/L2/L3	A	2		
Response values	Overvoltage:				
	OFF-switching	× U_c	--	0.9 ... 1.3	--
	ON-switching		--	4 % hysteresis	--
	Undervoltage:				
	OFF-switching	× U_c	0.8	0.7 ... 1.1	--
	ON-switching		0.85	4 % hysteresis	--
Minimum contact load		V; mA	10; 100		
Phase asymmetry	Setting accuracy	%	Approx. 5 ... 10		
	Repeat accuracy	%	1		
Phase failure detection	At L1, L2 or L3	ms	≥ 20	100	--
OFF delay		s	--	0.1 ... 20	0.1 ... 20
Automatic reclosing delay		s	0.2 ... 2	--	--
Rated insulation voltage U_i	Between coil/contact	kV	4		
Contacts	μ contact (AC-11)	A	3	1	4
Electrical isolation	Creepage distances and clearances				
	Contact/contact	mm	--	4	--
	Actuator/contact	mm	4		5.5
Rated impulse withstand voltage U_{imp}	Actuator/contact	kV	> 4		
Rated operational power P_s	AC operation:				
	230 V and p.f. = 1	VA	2000	--	--
	230 V and p.f. = 0.4	VA	1250	--	--
	DC operation:				
	U_e = 24 V and I_e = 6 A	W	max. 100	--	--
	U_e = 60 V and I_e = 1 A	W	max. 100	--	--
	U_e = 110 V and I_e = 0.6 A	W	max. 100	--	--
	U_e = 220 V and I_e = 0.5 A	W	max. 100	--	--
Terminals	± Screw (Pozidriv)		1		
Conductor cross-sections					
• Rigid, max.		mm^2	2 × 2.5		
• Flexible, with end sleeve, min.		mm^2	0.5		
Permissible ambient temperature		°C	-20 ... +60		
Humidity class	Acc. to IEC 60068-2-30		F		

			5TT3411	5TT3412	5TT3414	5TT3415
Rated operational voltage U_c		V AC	230	230/400		
Overload capability		× U_c	1.15	1.1	1.15	
Rated frequency		Hz	50/60			
Response values	ON-switching		2 % hysteresis	4 % hysteresis	5 %	
	OFF-switching	× U_c	0.9	0.9	0.85	
Minimum contact load		V/mA	10/100			
Phase failure detection	At L1, L2 or L3	ms	--	100	500	
N-conductor monitoring			--	Yes	--	
Rated insulation voltage U_i	Between coil/contact	kV	4		--	
Contacts	AC-15 NO contacts		3	2	--	
	AC-15 NC contacts		2	1	--	
	AC-15 CO contacts		--	1	1	2
Electrical service life in switching cycles	AC-15, 1 A, 230 V AC		5×10^5		1×10^5	
Rated impulse withstand voltage	Acc. to IEC 60664-1	kV	4		6	
Pollution degree			2		2	
Terminals	± Screw (Pozidriv)		2		--	
	– Screw (slot)		--		3.5	
Conductor cross-sections						
• Rigid		mm^2	2 × 2.5		1 x 4	
• Flexible, with end sleeve		mm^2	2 × 1.5		1 x 2.5	
Permissible ambient temperature		°C	-20 … +60		-25 … +60	
Climatic withstand capability	Acc. to EN 60068-1		20/060/04			

© Siemens AG 2016

Characteristic curves

Timing interval of 5TT3400... 5TT3406 undervoltage relays

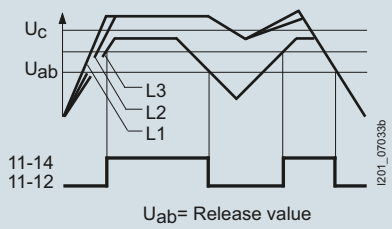

Timing interval of 5TT3410 N-conductor monitors

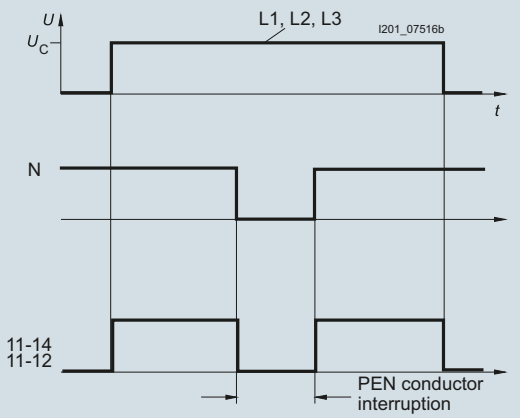

Timing interval of 5TT3407 short-time relays

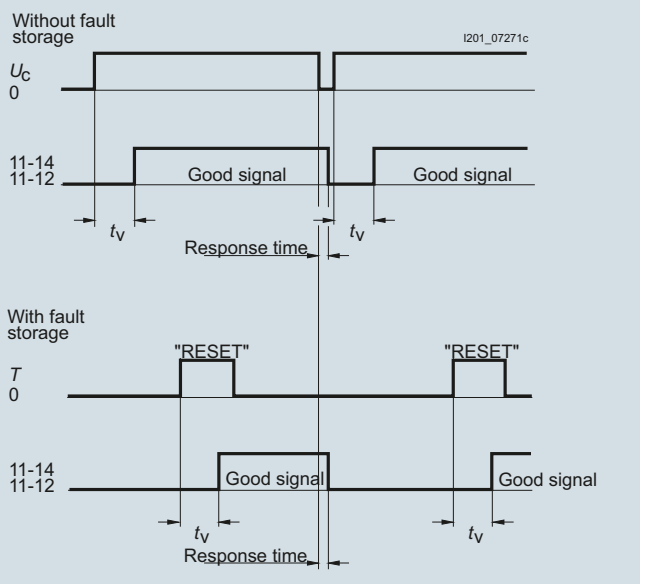

t_v: Adjustable automatic reclosing delay 0.2 to 20 s

The undervoltage relay switches at a phase asymmetry of approx. 6 to 8 %, regardless of the response values for undervoltage. The above diagram shows the timing interval for undervoltage or asymmetry.

Timing interval of 5TT3408 under/overvoltage relays

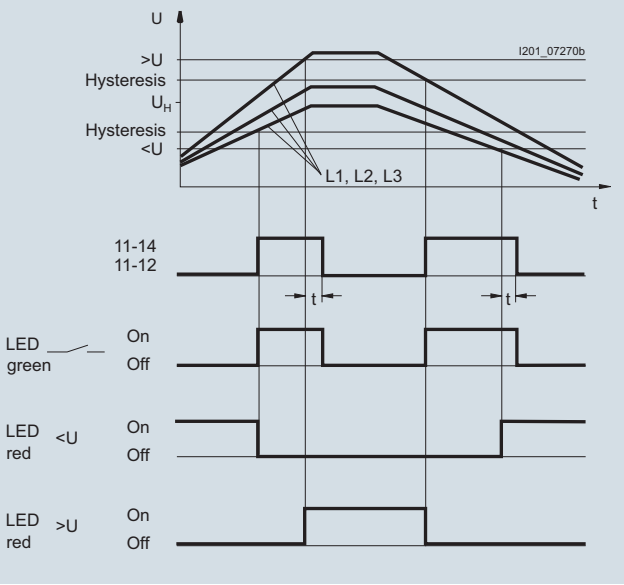

t: Adjustable OFF delay 0.1 to 20 s

The undervoltage relay switches at a phase asymmetry of approx. 6 to 8 %, regardless of the response values for undervoltage. The above diagram shows the timing interval for undervoltage.

© Siemens AG 2016

5TT3 voltage relays

5TT3415 undervoltage relays

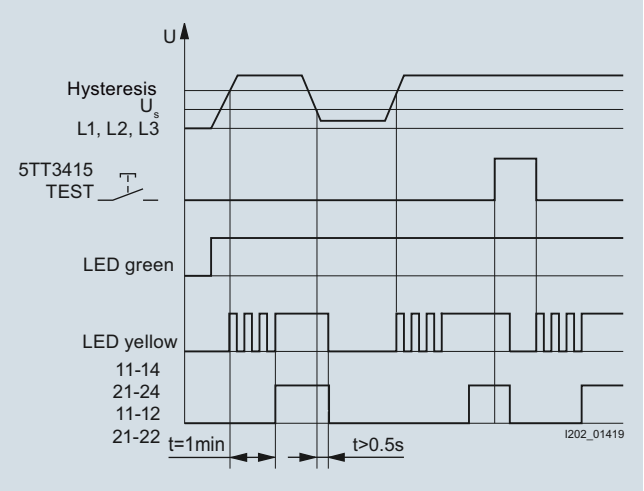

5TT3411 and 5TT3412 voltage relays

For characteristic curves of the 5TT3411 and 5TT3412 voltage relays, see "Monitors for medical premises" from page 34.

Dimensional drawings

5TT34, 5TT3194 and 5TT3195 voltage relays

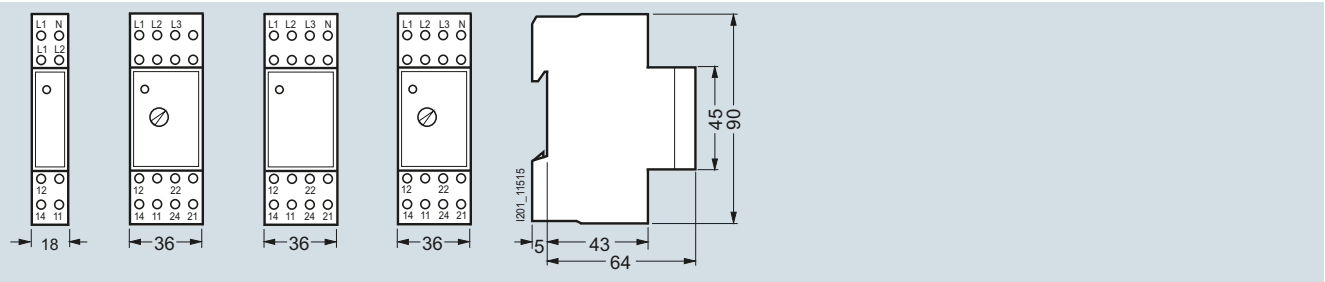

5TT3400
5TT3401

5TT3402
5TT3403

5TT3404
5TT3405
5TT3407
5TT3408

5TT3194
5TT3195
5TT3406

5TT34 undervoltage relays

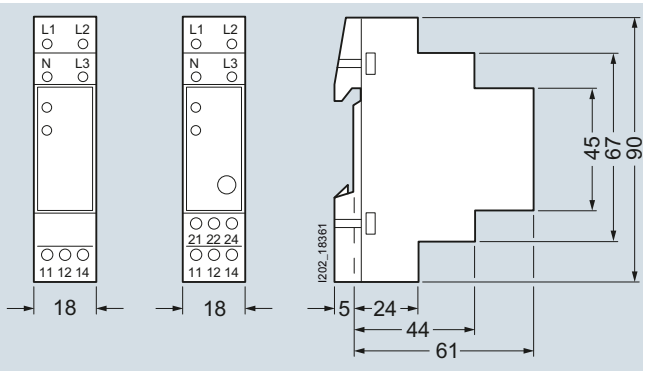

5TT3410 N-conductor monitors

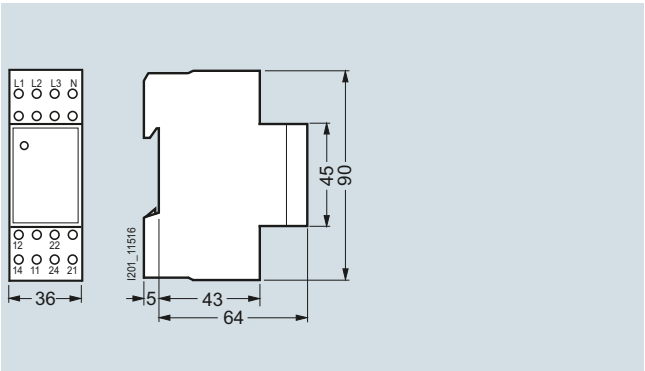

5TT3196 DC voltage monitors

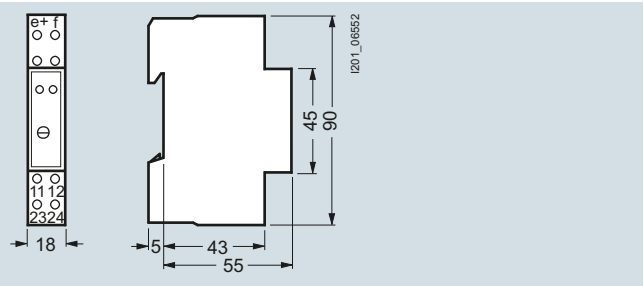

5TT3411 and 5TT3412 voltage relays

For dimensional drawings of the 5TT3411 and 5TT3412 voltage relays, see "Monitors for medical premises" from page 34.

© Siemens AG 2016

Circuit diagrams

Graphical symbols

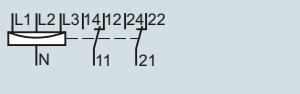

5TT3194
5TT3195
5TT3402
5TT3403
5TT3404
5TT3405
5TT3406
5TT3407
5TT3408
5TT3410

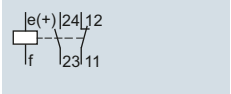

5TT3196

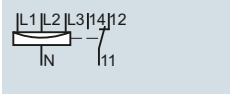

5TT3400
5TT3401

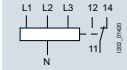

5TT3414

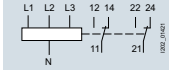

5TT3415

5TT34 undervoltage relays

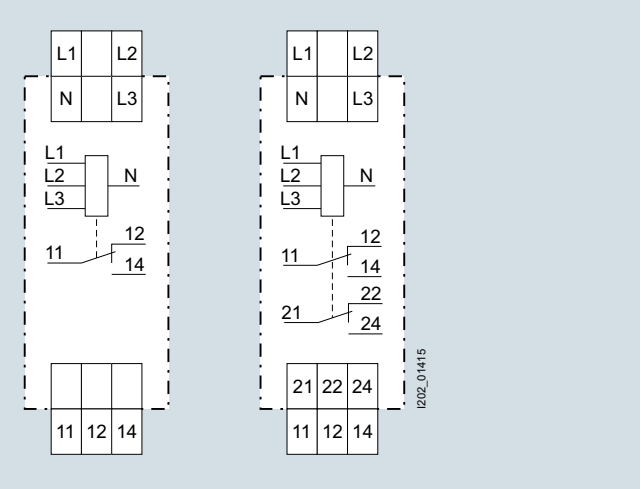

5TT3414 5TT3415

5TT3411 and 5TT3412 voltage relays

For circuit diagrams of the 5TT3411 and 5TT3412 voltage relays, see "Monitors for medical premises" from page 34.

Typical circuit for 5TT3195, 5TT340 voltage relays

1, 2, 3-phase operation against N

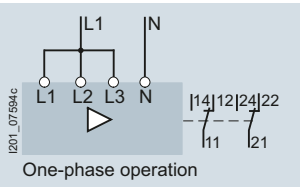

One-phase operation

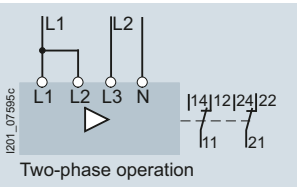

Two-phase operation

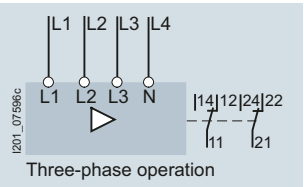

Three-phase operation

Typical circuit for 5TT3196 DC voltage monitors

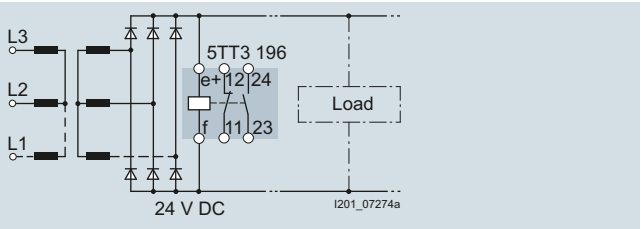

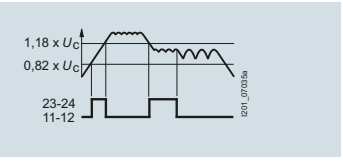

If 0.82 × U_c is fallen short of, or 1.18 × U_c exceeded, or if the residual ripple is too high, the 11/12 contact closes and the 23/24 contact opens.

© Siemens AG 2016

5TT3 voltage relays

Typical circuit for 5TT3401, 5TT3403, 5TT3405 undervoltage relays

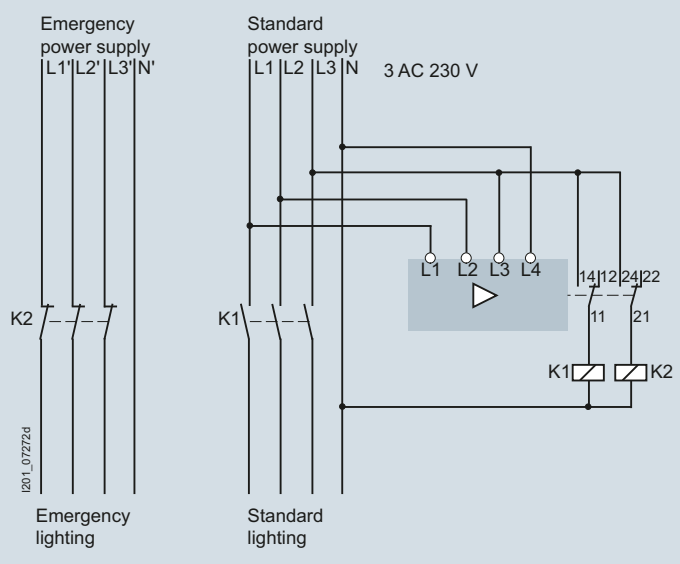

One application of undervoltage relays is the switching to a safe power supply after a fault.
Buildings are distinguished according to use, such as business premises, exhibition areas or guest houses. These are all covered generically as rooms/buildings "where people meet".

There is a fault if the voltage of the general power supply drops for 0.5 seconds > 15 % in relation to the rated voltage (i.e. 195 V at 230 V).

In this case the lighting must be switched to a safety power supply after 0.5 to 15 s depending on the type of use. A safety power supply may be: a battery system, a generating set or a quick-starting standby generating set.

Typical circuit for 5TT3404, 5TT3405, 5TT3406, 5TT3408 under/overvoltage relays

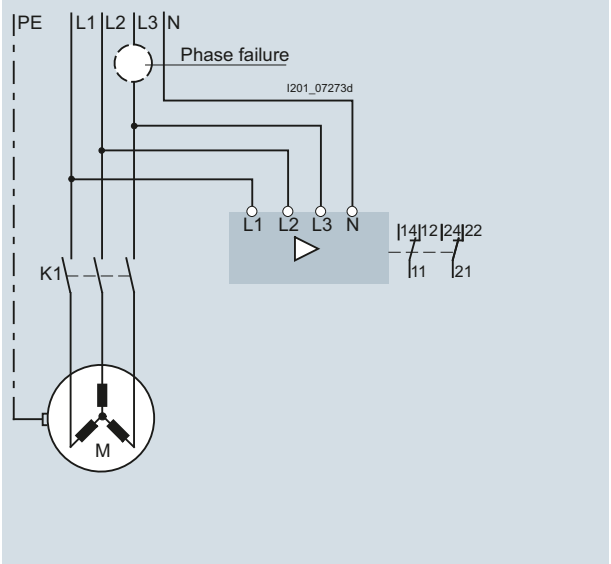

These voltage relays can only be used for 3-phase operation. They monitor not only under- and overvoltages in accordance with their description, but also reverse voltage, asymmetry and N-conductor breaks.

© Siemens AG 2016

Typical circuit for 5TT3407 short-time relays

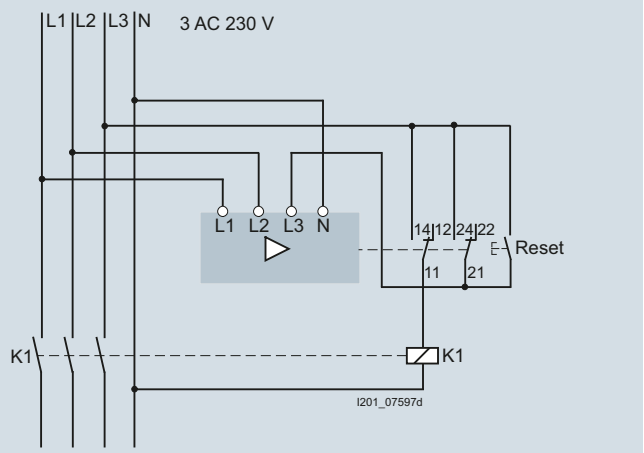

In the case of sensitive technical sequences, it is often not possible to tell whether this interrupt has interfered with the process sequence. The circuit disconnects the power supply, which can then be switched back by using the RESET pushbutton.

Typical circuit for 5TT3407 short-time relays

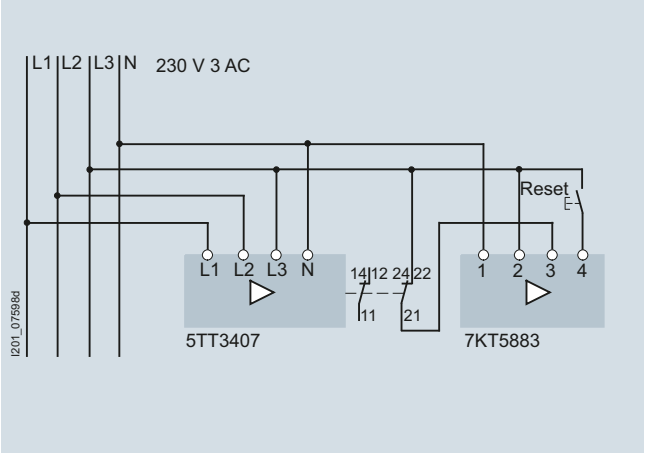

In simple cases, it may be sufficient for a short-time interruption to be registered without the need to disconnect the power supply. In the case of a short-time interruption, this is counted by the pulse counter. The pulse counter can be reset if required.

Typical circuit for 5TT3410 N-conductor monitors

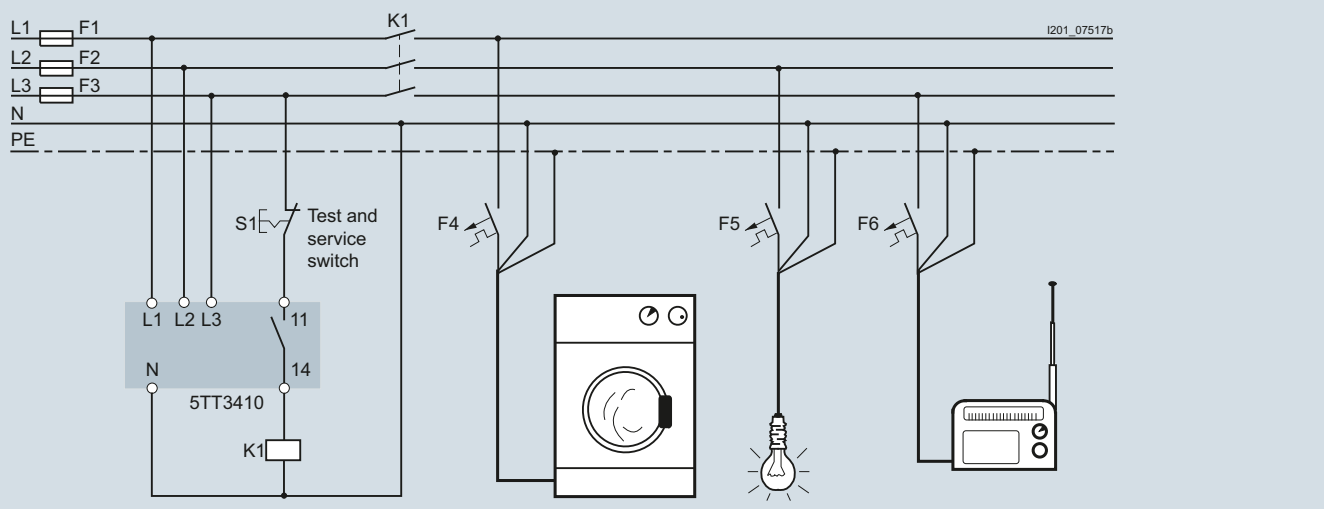

© Siemens AG 2016

More information

	5TT3 194	5TT3 195	5TT3 196	5TT3 400	5TT3 401	5TT3 402	5TT3 403	5TT3 404	5TT3 405	5TT3 406	5TT3 407	5TT3 408	5TT3 410	5TT3 411	5TT3 412
Overvoltage	✓	✓	✓	--	--	--	--	--	--	--	--	✓	--	✓	✓
Undervoltage	--	--	✓	✓	✓	✓	✓	✓	✓	✓	✓	✓	--	--	--
Monitoring of safety light devices	--	--	--	--	✓	--	--	--	✓	--	--	--	--	--	--
Monitoring of medical premises	--	--	--	--	--	--	--	--	--	--	--	--	--	✓	✓
Monitoring of N-conductor	--	--	--	--	--	--	--	--	--	--	--	--	✓	--	✓
Monitoring of short-time interruptions	--	--	--	--	--	--	--	--	--	--	✓	--	--	--	--
1, 2, 3-phase to N	✓	--	--	✓	✓	✓	✓	--	--	--	✓	--	--	✓	✓
3 phases to N	--	✓	--	--	--	--	--	✓	✓	✓	--	✓	--	--	--
Asymmetry detection	--	✓	--	--	--	--	--	✓	✓	✓	--	✓	✓	--	✓
N-conductor monitoring	--	--	--	--	--	--	--	✓	✓	✓	✓	✓	✓	--	✓
Reverse voltage detection	--	✓	--	--	--	--	--	✓	✓	✓	--	✓	--	--	✓
Short-time failure detection	--	--	--	--	--	--	--	--	--	--	✓	--	--	--	--
Phase failure detection	--	--	--	✓	✓	✓	✓	✓	✓	✓	✓	✓	--	--	✓
Switching thresholds:	--	--	--	--	--	--	--	--	--	--	--	--	--	--	--
0.7/0.9 × U_c, non-adjustable	--	--	--	✓	--	✓	--	✓	--	--	--	--	--	--	--
0.8/0.85 × U_c, non-adjustable	--	--	--	--	--	--	--	--	--	--	✓	--	--	--	--
0.85/0.95 × U_c, non-adjustable	--	--	--	--	✓	--	✓	--	✓	--	--	--	--	--	--
0.7 ... 0.95 × U_c, 5 % hysteresis, adjustable	--	--	--	--	--	--	--	--	--	✓	--	--	--	--	--
0.7 ... 1.1 × U_c, 4 % hysteresis, adjustable	--	--	--	--	--	--	--	--	--	--	--	✓	--	--	--
0.9 ... 1.3 × U_c, 4 % hysteresis, adjustable	✓	✓	--	--	--	--	--	--	--	--	--	✓	--	--	--
Adjustable time delay	--	--	--	--	--	--	--	--	--	--	--	✓	--	--	--
Contact: 1 CO	--	--	--	✓	✓	--	--	--	--	--	--	--	--	--	--
Contact: 2 CO	✓	✓	--	--	--	✓	✓	✓	✓	✓	✓	✓	✓	--	--
Contact: 1 CO, 1 NO, 1 NC	--	--	--	--	--	--	--	--	--	--	--	--	--	--	✓
Contact: 1 NO, 1 NC	--	--	✓	--	--	--	--	--	--	--	--	--	--	--	--
Contact: 2 NO, 2 NC	--	--	--	--	--	--	--	--	--	--	--	--	--	✓	--

General voltage monitoring

For general device and plant protection, voltage relays with switching thresholds of 0.7 × U_c, i.e. 161 V are used. If they have fixed, non-changeable switching thresholds, they switch back to normal operation at 0.85 × U_c, 195 V or at 0.9 × U_c, 207 V, depending on the version. If they have adjustable thresholds, they switch back to normal operation with 4 % hysteresis, 9 V.

1, 2 or 3 phases to N or 3 phases to N

All voltage relays require an N-conductor. Devices for 1, 2 or 3 phases to N can be used for 1-, 2-, or 3-phase operation. Devices for 3 phases to N require all three phases, whereby the sequence in which they are connected is irrelevant.

Asymmetry detection

If different voltages occur in a three-phase network, this is called phase asymmetry. Some voltage relays detect an asymmetry of approx. 6 to 8 % of the phase-to-neutral voltage, i.e. approx. 14 to 16 V and switch off. This type of operation is used for example to protect motors against a "skew".

N-conductor monitoring

An N-conductor break causes a skew, depending on the phase load. In extreme cases, this could cause 400 V to be applied to a phase and destroy the connected devices. Each voltage relay with asymmetry detection is tripped by an N-conductor break, if the phase displacement is at least 14 to 18 V.

The 5TT3410 N-conductor monitor detects a phase displacement of 5 %, which is roughly 12 V. This provides earlier protection against overvoltage for connected devices. The N-conductor monitor does not react if the voltage drops or rises in all phases simultaneously; or if a phase is swapped with the N-conductor.

Reverse voltage detection

If a phase fails, the motors feed a reverse voltage to the missing phase. However, voltage relays with reverse voltage detection will disconnect in this case because they are monitoring the phase angle.

Phase failure detection

If a phase fails completely, the voltage relays disconnect with a delay as specified in the technical specifications.

Short-time failure detection

Short-time failures upwards of 20 ms cannot be detected with conventional voltage relays. However, they can occur in the case of system transfers or lightning strikes and can lead to uncertainty for sensitive process sequences or measuring procedures. The 5TT3407 short-time voltage relay has a reset function that allows a procedure to be permanently interrupted after a fault.

Back-up fuse

The voltage relays do not require a back-up fuse as device protection. However, they are often installed in junctions, i.e. in main supply systems with high fusing. In this case, the supply lead to the voltage relay must be short-circuit resistant. The back-up fuse only serves as line protection.

5TT3411 and 5TT3412 voltage relays

For control elements of the 5TT3411 and 5TT3412 voltage relays, see "Insulation monitors for medical premises" from page 34.

© Siemens AG 2016

Overview



The voltage and frequency relay monitors the status of the grid in the case of in-plant generation systems. Violation of an upper or lower limit results in shutdown and disconnection of the generation system from the grid. Connection or automatic re-connection of the generation system to the grid only takes place when the grid frequency and the grid voltage have remained within their respective tolerance ranges without interruption for the duration of an adjustable time delay t_W. Following shutdown due to a brief interruption, re-connection takes place when the grid frequency and grid voltage have remained within the tolerance range for 5 s without interruption.

Benefits

- Clearance certification of the German Employer's Liability Association (Energy, Textile, Electrical and Media Products)
- Default settings in accordance with VDE-AR-N-4105
- The voltage and frequency relay meets the high requirements of VDE AR-N 4105
- It can be used both for centralized and integrated grid and plant protection
- The latching rotary switches enable fast and easy setting of the required values
- An illuminated LCD display provides plant status information
- The voltage and frequency relay ensures single-fault tolerance as stipulated in the VDE-AR-N 4105 application guide
- Passive procedure for detecting islanding

Application

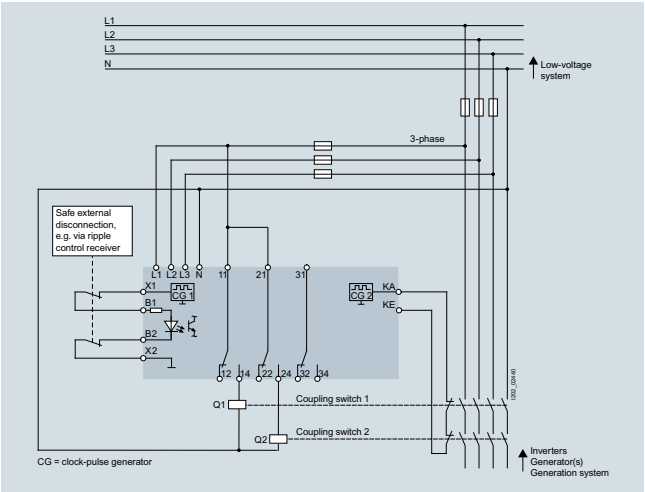

Enable via external contact

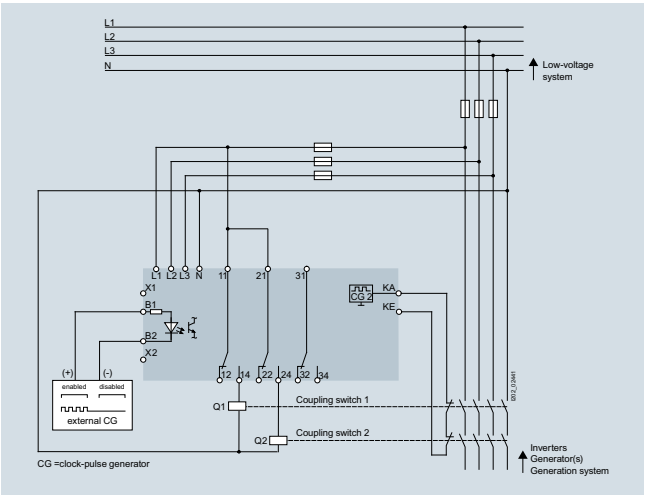

Enable using external voltage 24 V AC, 40 ... 400 Hz

© Siemens AG 2016

Technical specifications

			Voltage and frequency relays	
			5TT3426	**5TT3427**
Standards			IEC/EN 60255-1; IEC/EN 61000; VDE-AR-N-4105	
Supply voltage U_v		V AC	3 x 85 ... 288	
Supply voltage B1/B2		V AC	24 (at 40 ... 400 Hz)	
Rated operational voltage U_c		V AC	230/400	
Rated impulse withstand voltage	Acc. to IEC 60664-1			
• Contact 31, 32, 34		kV	6	
• KA, KE and measuring circuit		kV	4	
• Pollution degree			2	
Recommended fuse Measuring inputs	gG/gL	A	6	
Temperature range		°C	-20 ... +60 (in the range 0 °C ... -20 °C, there may be restrictions to the functionality of the LCD display)	
Conductor cross-sections				
• Rigid, flexible		mm^2	0.5 ... 4	
• Flexible with end sleeve		mm^2	0.5 ... 2.5	
• Multi-conductor connection 2 conductors of same cross-section		mm^2	0.5 ... 1.5	
Output relay				
Mode of operation			Quiescent current	
Contacts				
• NO contacts	AC15	A AC/V AC	3/230	
• NC contacts	AC15	A AC/V AC	1/230	
Thermal current		A AC	5	
Electrical service life				
• NO contacts	AC15, 1A, AC230	Switching cycles	300000	
Rise in frequency		Hz	50.2 ... 51.2	
Drop in frequency		Hz	47.0 ... 49.8	
Rise in voltage				
• Phase/neutral		V AC	253 ... 288	
• Phase/phase		V AC	--	438 ... 498
Drop in voltage				
• Phase/neutral		V AC	184	
• Phase/phase		V AC	--	319
Mean rise in voltage over 10 minutes				
• Phase/neutral		V AC	253 ... 267	
• Phase/phase		V AC	--	438 ... 462
Re-connection time t_w		sec	0 ... 600	
Disconnection response time		ms	< 100	
Connection condition				
• Frequency		%	5	
• Voltage		Hz	47.5 ... 50.05	
Accuracy				
• Frequency		% (± 1 digit)	≤ ±1	
• Voltage		% (± 1 digit)	≤ ±0.02	
Dimensions		W x H x D	70 x 90 x 71 mm	

© Siemens AG 2016

Dimensional drawings

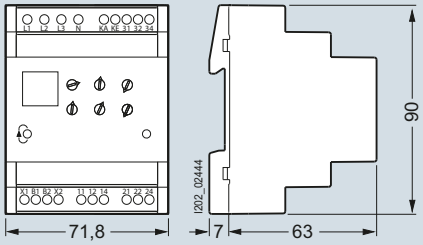

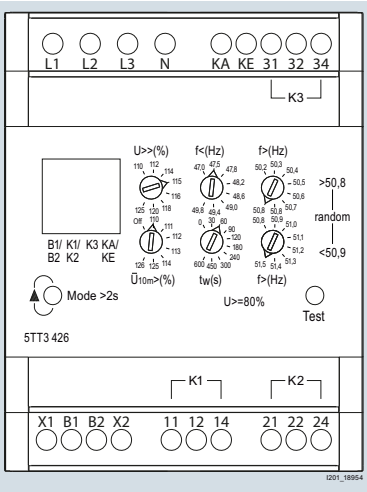

5TT3426

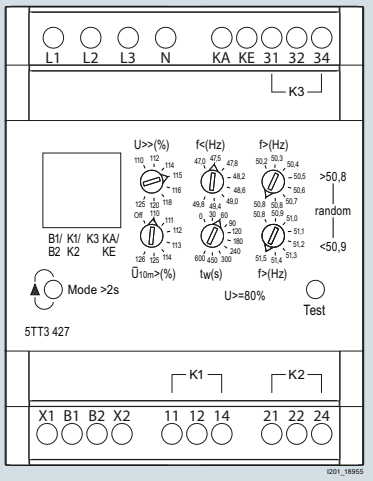

5TT3427

Circuit diagrams

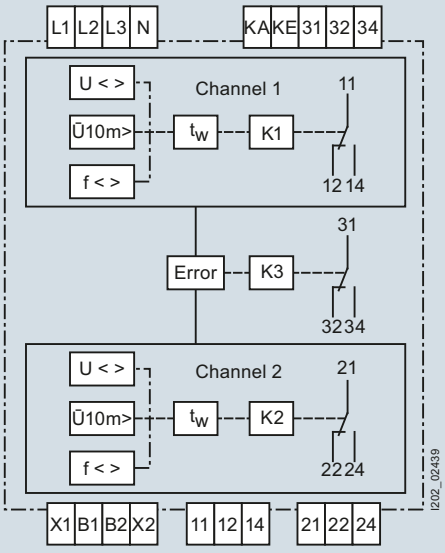

5TT3426 and 5TT3427

© Siemens AG 2016

Overview

Current relays monitor single and three-phase systems for the flow of current, e.g. in emergency lighting installations, and the loading of motors. They are available as undercurrent, overcurrent and under/overcurrent relays.

Technical specifications

			5TT6111	5TT6112
Standards			IEC 60255; DIN VDE 0435-303	
Rated operational current I_c		A	1 ... 10	
Rated operational voltage U_c		V AC	230	
Primary operating range **Overload capability, continuous** **Overload capability, short-time**	 At 50 °C ambient temperature max. 3 s	× U_c A A	0.9 ... 1.1 15 20	
Rated frequency		Hz	50/60	
Response values	ON-switching OFF-switching		Infinitely variable Permanent, 4 % hysteresis	
Switching delay t_v	Infinitely variable	s	0.1 ... 20	
Response time	Non-adjustable	ms	Current corresponds to the rated operational power of the continuous-flow heater	
Minimum contact load		V; mA	10; 100	
Rated insulation voltage U_i	Between coil/contact	kV	2.5	
Contacts μ contact (AC-15)	 NO contacts NC contacts	 A A	 3 1	
Electrical isolation	Creepage distances and Actuator/contact	mm	3	
Rated impulse withstand voltage U_{imp}	Actuator/contact	kV	> 4	
Terminals	± Screw (Pozidriv)		1	
Conductor cross-sections	Rigid Flexible, with end sleeve	max. mm^2 min. mm^2	2 × 2.5 1 × 0.5	
Permissible ambient temperature		°C	-20 ... +60	
Climatic withstand capability	Acc. to EN 60068-1		20/60/4	

			5TT6113	5TT6114	5TT6115	5TT6120
Standards			IEC 60255; DIN VDE 0435-303			
Rated operational current I_c		 A A A A	4 ranges 0.1 ... 1 0.5 ... 5 1 ... 10 1.5 ... 15			1 range 0.5 ... 5
Rated operational voltage U_c		V AC	230			
Primary operating range **Overload capability, continuous** **Overload capability independent of measuring range**	 Max. 3 s	× U_c A A	0.9 ... 1.1 20 30			15
Rated frequency		Hz	50/60			
Response values	ON-switching OFF-switching		Infinitely variable Permanent, 4 % hysteresis			
Switching delay t_v	Infinitely variable	s	0.1 ... 20			
Response time	Non-adjustable	ms	See: www.siemens.com/lowvoltage/manuals			
Minimum contact load		V; mA	10; 100			
Rated insulation voltage U_i	Between coil/contact	kV	2.5			
Contacts μ contact (AC-15)	 NO contacts NC contacts	 A A	 5 1			
Electrical isolation	Creepage distances and Actuator/contact	mm	3			
Rated impulse withstand voltage U_{imp}	Actuator/contact	kV	> 4			
Terminals	± Screw (Pozidriv)		1			
Conductor cross-sections	Rigid Flexible, with end sleeve	max. mm^2 min. mm^2	2 × 2.5 1 × 0.5			
Permissible ambient temperature		°C	-20 ... +60			
Climatic withstand capability	Acc. to EN 60068-1		20/60/4			

© Siemens AG 2016

Dimensional drawings

5TT611 current relays

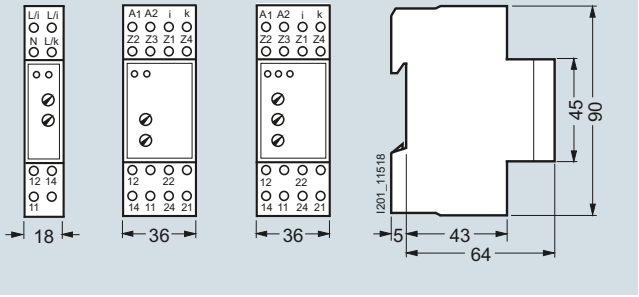

5TT6111
5TT6112

5TT6113
5TT6114

5TT6115

5TT6120 current relays

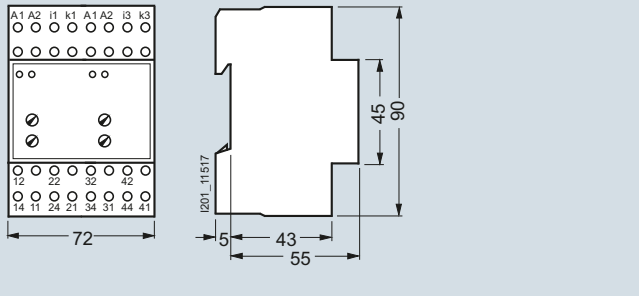

5TT6120

Circuit diagrams

Graphical symbols

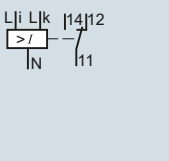

5TT6111
5TT6112

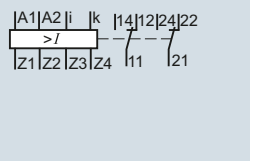

5TT6113

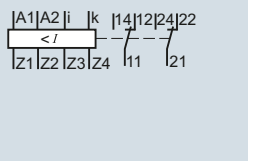

5TT6114

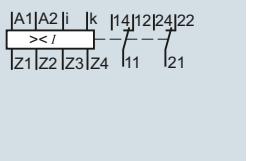

5TT6115

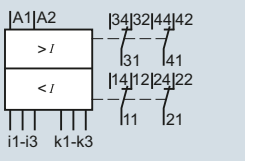

5TT6120

Typical circuit for 5TT6111 undercurrent monitors

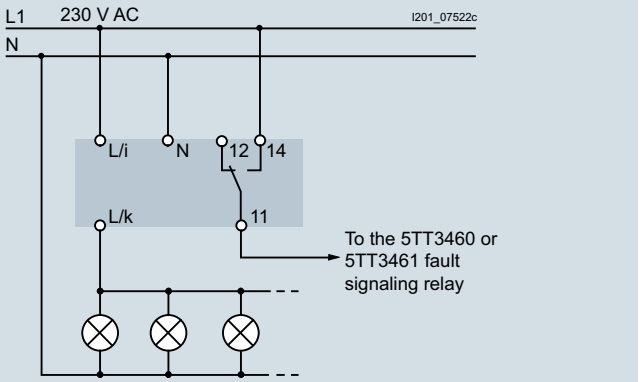

Typical circuit for 5TT6114 overcurrent monitors Measurement with transformer

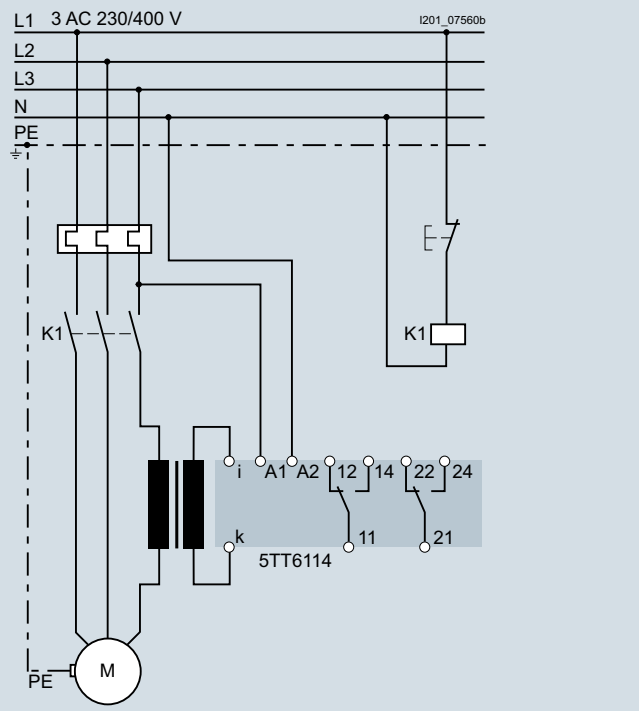

© Siemens AG 2016

5TT6 current relays

Typical circuit for 5TT6114
With direct measurement up to 15 A for overcurrent measurement

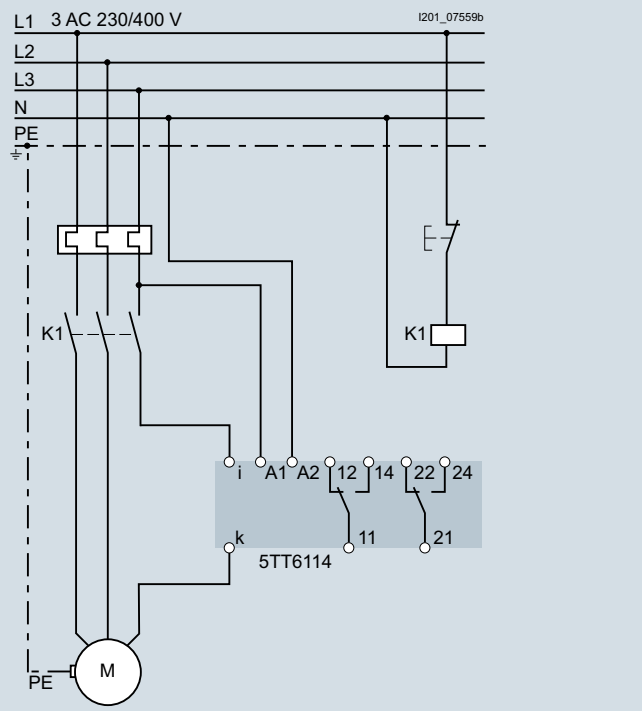

Typical circuit for 5TT6120
With direct measurement of up to 5 A for undercurrent/overcurrent measurement

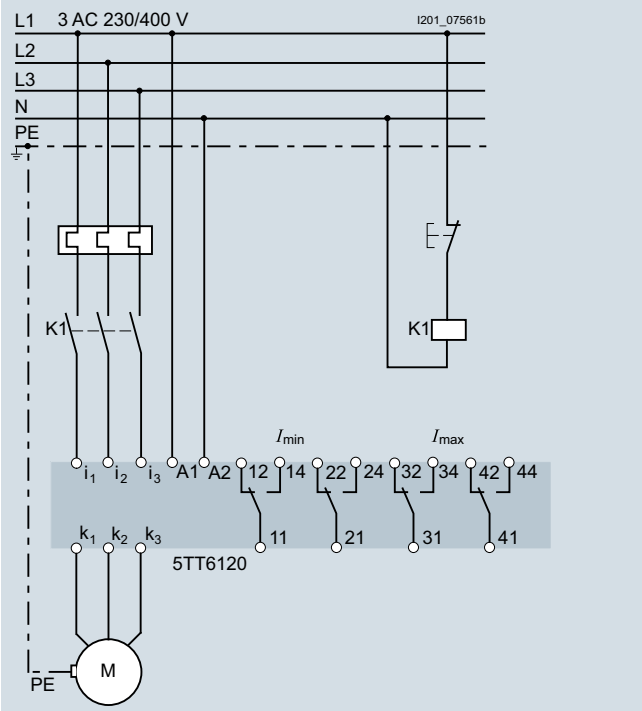

More information

Direct measurement, transformer measurement

All current relays can be connected with direct measurement or through transformers.

N potential

Versions 5TT6113 to 5TT6120 can be connected with a separate N potential.

Response time

Current relays are not circuit-protective devices for lines. They switch with a delay in the ms range.

Overload capability

Independent of the set measuring range and set measured value, current relays can be permanently overloaded up to 15 A and 20 A; for 3 s; even up to 20 A and 30 A.

Device overview		5TT6111	5TT6112	5TT6113	5TT6114	5TT6115	5TT6120
Undercurrent		✓	--	✓	--	✓	✓
Overcurrent		--	✓	--	✓	✓	✓
Single-phase		✓	✓	✓	✓	✓	--
Three-phase		--	--	--	--	--	✓
Separate N potential		--	--	✓	✓	✓	✓
Measuring ranges:	**Jumper:**						
0.1 - 1 A	Z1 – Z2	--	--	✓	✓	✓	--
0.5 - 5 A	Z1 – Z3	--	--	✓	✓	✓	✓
1 ... 10 A	Z1 – Z4	✓	✓	✓	✓	✓	--
1.5 - 15 A	Z1 – Z3 – Z4	--	--	✓	✓	✓	--
Can be programmed over jumpers		--	--	✓	✓	✓	--
Contacts	1 CO	✓	✓	--	--	--	--
	2 CO	--	--	✓	✓	✓	✓

Buildings/object-safe guiding lights

In the approach corridors of planes, high buildings must be fitted with position lighting. The same planning instructions apply to the monitoring of this type of lighting and runway lighting as the monitoring of emergency lighting.

Monitoring of emergency lighting with incandescent lamps

The function of emergency lighting according to DIN VDE 0108 must be checked at regular intervals. The operational current is continuously monitored using current relays. The lighting can either be integrated in the general lighting system or just supplied on demand with emergency current.

The current relay is set so that it switches on at the max. lamp current. If an incandescent lamp fails, a fault is signaled.

Monitoring of motors

If the warning is sent early enough, the fault can be eliminated before the motor starts to overheat and the circuit breaker switches the motor off.

Current relays reliably safeguard the monitoring of fault-free running motors and, in some cases are more suitable than a voltage relay, which is geared more towards motor protection.

© Siemens AG 2016

Example: Screw conveyor

Hard objects in screw conveyors, e.g. in sewage treatment plants, can often jam the conveyor system. Appropriately set, the current relay signals over its contact(s) that a hazardous situation has occurred and threatens to block the motor.

Example: Agitators

As with the conveyor processes, changes to the viscosity can lead to an overload of the motors.

Example: Crane motor control system

The current monitoring of the main motor (hoisting motor) ensures that the electrical holding brake is not released until the main motor is in operation and the load is held.

Example: Dust extraction

In the interests of work safety and to protect against massive dust development, it is essential to ensure that the dust extraction system is working perfectly before a saw or sanding machine is switched on.

Planning the monitoring of an incandescent lamp

Current relays have a hysteresis of approx. 4 %. The smallest lamp must not exceed the set measuring range by more than 8 %.

Example: 12 lamps of 100 W each = 1200 W, which corresponds to a current of approx. 5.2 A. If a lamp fails, the current drops by 0.4 A. This 0.4 A corresponds to 8 % of the set measured value 5.2 A.

Response time

The response time of the fault signal is produced by the "adjustable switching delay" (see the technical specifications) and an additional delay, which is determined from the actual current and the set value.

F	Pickup ms	Dropout ms
1	10	250
2	70	70
5	120	30
10	180	15
20	220	10
30	240	12

$$F = \frac{I_{act}}{I_{meas}}$$

I_{act}: Instantaneously flowing current

I_{meas}: Set current threshold value to be measured

Pickup: With an overcurrent relay, the contact 11 – 14 (21 – 24) to the fault signal closes when the instantaneous current flowing is higher than the switching threshold.
The relay picks up.

Dropout: With an overcurrent relay, the contact 11 – 12 (21 – 22) to the fault signal closes when the instantaneous current flowing is higher than the switching threshold.
The relay drops out.

Function charts for 5TT61 overcurrent relay signal

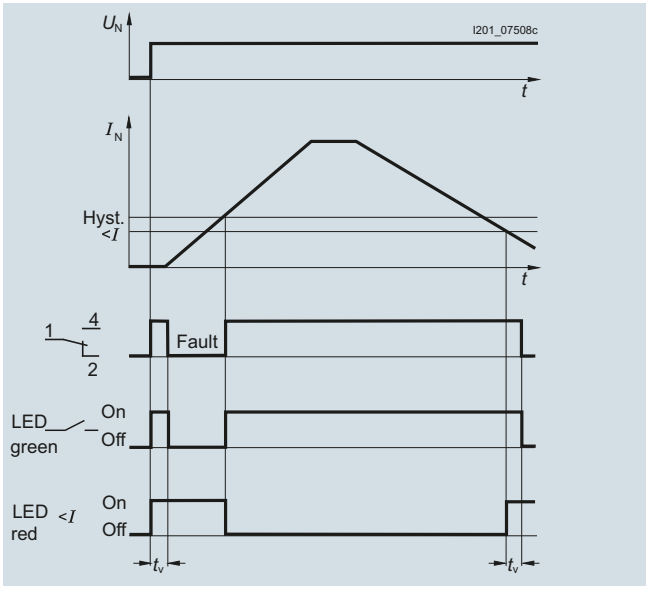

5TT61 overcurrent relay signal

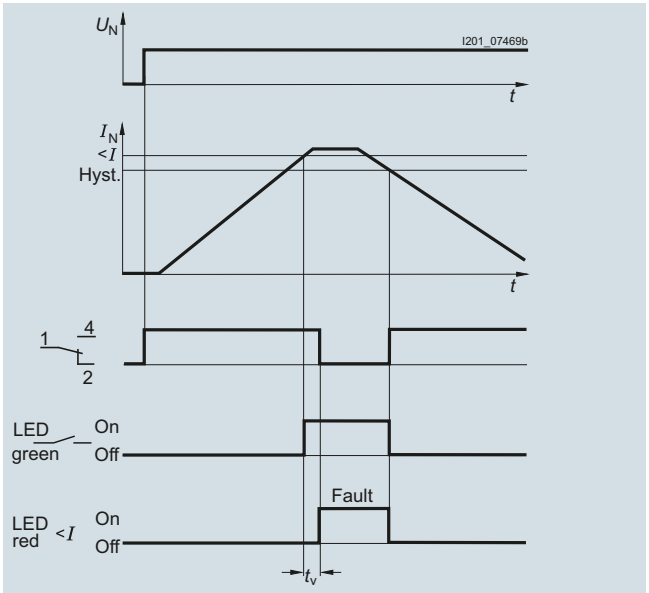

© Siemens AG 2016

Function charts for
5TT6115 under/overcurrent relay signal

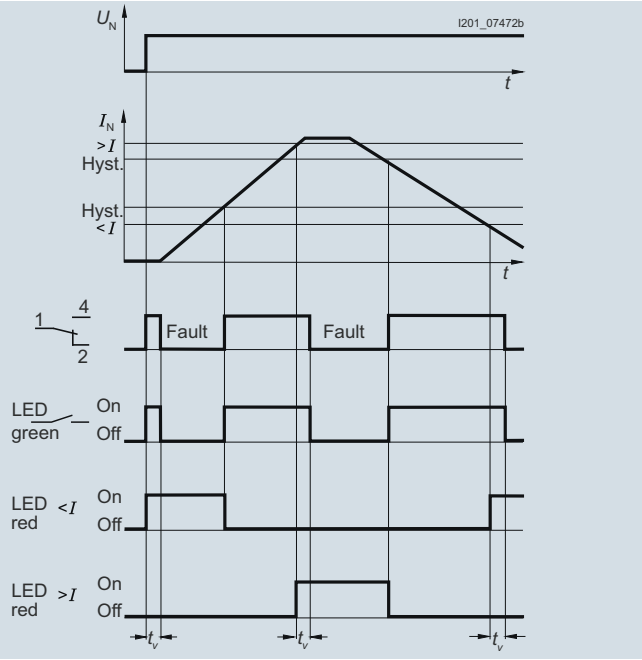

Contrary to all other current relays, a fault signal is always output over the contact 11 – 14 (21 – 24). The red LEDs indicate whether the signal is for an undercurrent or an overcurrent.

© Siemens AG 2016

Overview



The 5TT3424 and 5TT3425 reverse power relays monitor the direction of the energy transport in an electric grid. This may be necessary where public grids and industrial grids intersect, e.g. when using emergency generators, motor-driven generators, etc.

Technical specifications

			Reverse power relays	
			5TT3424	**5TT3425**
Standards			IEC 60255; DIN VDE 0435-303	
Rated voltage U_n		V AC	230, 3-phase systems without N	400, 1- or 3-phase systems without N
Rated current I_n		A	5	
Response value	Reverse power	%	2 ... 20	
Hysteresis		%	12.5 of the set response value	
Rated frequency		Hz	45 ... 65	
Response delay t_{an}		s	0.2 ... 10, adjustable	
Contact arrangement			2 CO	
Output				
Contact arrangement			2 CO	
Breaking capacity	IEC 60947-5-1			
• NO contacts • NC contacts • Acc. to DC 13	AC15 AC15	A AC/V AC A AC/V AC A DC/V DC	3/230 1/230 1/24	
Thermal current		A	2 x 5	
Electrical service life	IEC 60947-5-1			
• NO contacts	AC 15, 3A, 230 AC	Switching cycles	2 x 10^5	
Permissible switching frequency		Switching cycles/h	1800	
Short-circuit strength, max. melting fuse	IEC 60947-5-1		4 A gL	
Mechanical service life		Switching cycles	30 x 10^6	
General data				
Permissible ambient/storage temperature		°C	-20 ... +60	
Clearance and creepage distances				
• Rated impulse withstand voltage		kV	4	
• Pollution degree	IEC 60664-1		II	
Degree of protection				
• Enclosure			IP40	
• Terminals			IP20	
Wire connections				
• Fixed screw terminal (S)			0.2 ... 4 mm^2 solid or 0.2 ... 1.5 mm^2 stranded wire with sleeve	
Dimensions		W x H x D	70 x 90 x 71 mm	

© Siemens AG 2016

Overview

Fuse monitors serve to monitor all types and versions of melting fuses that cannot be equipped with a fault signal contact. This enables integration in fault signaling circuits or a central alarm in order to improve plant availability.

Technical specifications

			5TT3170
Standards			IEC 60255; DIN VDE 0435-110
Rated operational voltage U_c		V	3 AC 380 ... 415
Primary operating range		× U_c	0.8 ... 1.1
Rated frequency		Hz	50 ... 400
Internal resistance of measuring paths		Ω/V	> 1000
Max. permissible feedback		%	90
Response/release time		ms	< 50
Rated impulse withstand voltage U_{imp} Input/output		kV	> 4
Rated operational voltage U_e		V AC	250
Rated operational current I_e	AC-1	A	4
Electrical service life	AC-11	In switching cycles at 1 A	1.5×10^5
Terminals	± Screw (Pozidriv)		1
Conductor cross-sections	Rigid, max. Flexible, with end sleeve, min.	mm^2 mm^2	2 × 2.5 1 × 0.5
Permissible ambient temperature		°C	-20 ... +45
Climatic withstand capability	Acc. to EN 60068-1		20/45/4

Dimensional drawings

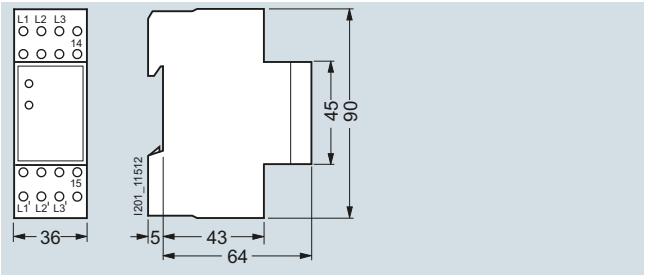

Circuit diagrams

Graphical symbols

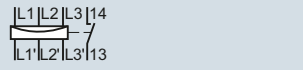

More information

Typical circuit, function chart

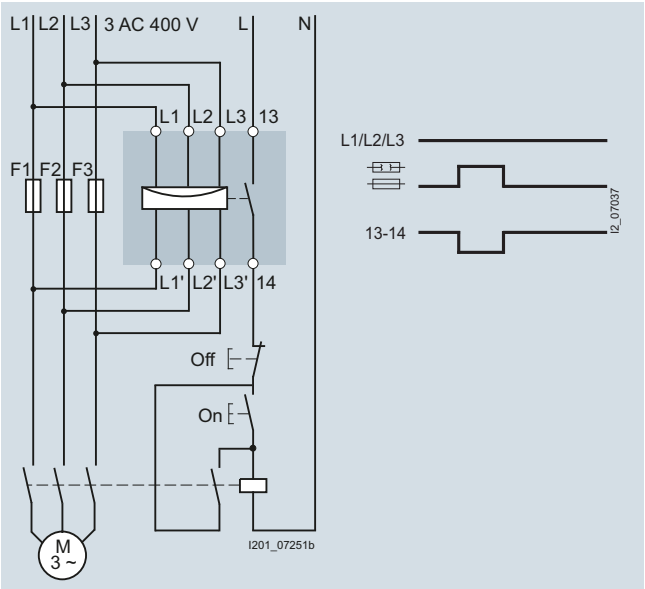

If the fuse fails, the motor is immediately disconnected (prevention of two-phase run). After changing the fuse, the motor can be restarted by pressing the "ON" button.
Unlike conventional motor circuit breakers, it is not possible to switch the motor on if the fuse is faulty.

Note:
The internal resistance of the measuring paths of the fuse monitor is in the MΩ range so that the VDE regulations with regard to touch voltage are met in the event of faulty fuses (> 1000 Ω/V). To isolate the main switch, it must be switched off. The enclosed label should be affixed to the switchgear as a reminder.

© Siemens AG 2016

Overview

Phase monitors monitor the voltages in three-phase system and signal the power failure of one or more phases over a floating contact. Phase sequence monitors monitor the phase sequence in three-phase systems and signal any changes in the phase sequence – change of rotating field – over a floating changeover contact.

Technical specifications

			5TT3421	5TT3423
Standards			IEC 60255; DIN VDE 0435	
Rated operational voltage U_c		V AC	230/400	400
Primary operating range		× U_c	0.8 ... 1.1	
Rated frequency		Hz	50/60	
Rated power loss P_v	Electronics Contacts	VA VA	9 0.2	
Rated operational voltage U_e		V AC	250	
Rated operational current I_e		A	4	
Minimum contact load		V; mA	10; 100	
Rated insulation voltage U_i	Between coil/contact	kV	4	
Contacts	μ contact (AC-11)	A	3	
Electrical isolation	Creepage distances and clearances Actuator/contact	 mm	 4	
Rated impulse withstand voltage U_{imp}	Actuator/contact	kV	> 2.5	
Terminals	± Screw (Pozidriv)		1	
Conductor cross-sections	Rigid, max. Flexible, with end sleeve, min.	mm^2 mm^2	2 × 2.5 --	
Degree of protection	Acc. to EN 60529		IP20, with connected conductors	
Safety class	Acc. to EN 61140/VDE 0140-1		II	
Permissible ambient temperature		°C	-20 ... +60	
Climatic withstand capability	Acc. to EN 60068-1		20/60/4	

Dimensional drawings

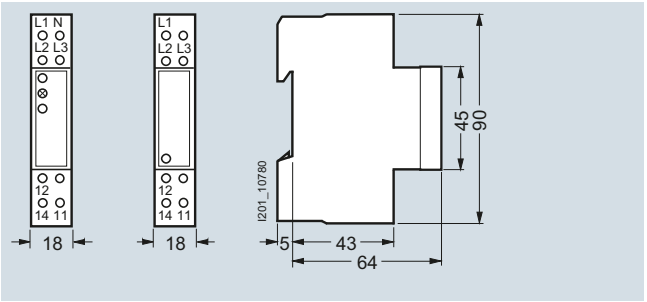

5TT3421 5TT3423

Circuit diagrams

Graphical symbols

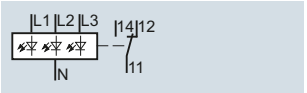

5TT3421

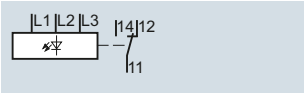

5TT3423

© Siemens AG 2016

More information

Typical circuit diagrams

5TT3421 phase monitors

The phase monitor can be operated either in 1, 2 or 3-phase operation.

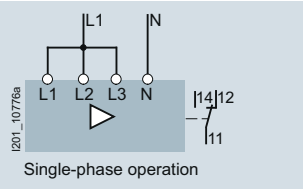

Single-phase operation

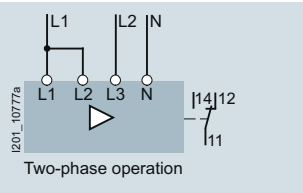

Two-phase operation

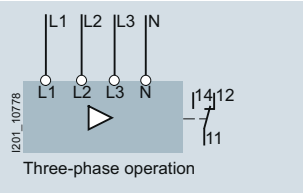

Three-phase operation

5TT3423 phase sequence monitors

Phase sequence monitors must always be connected in three-phase.

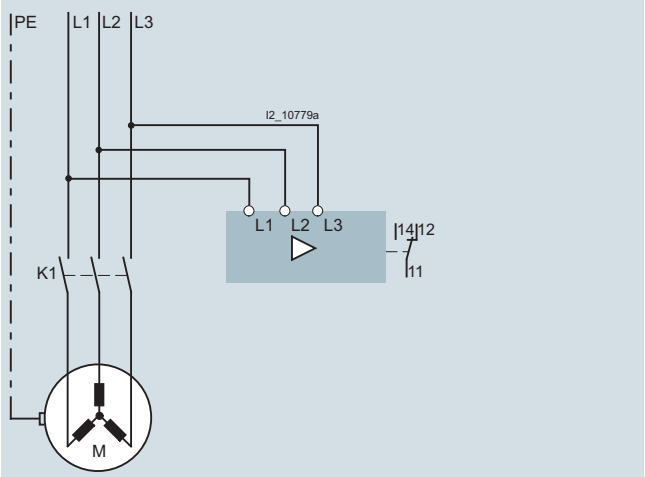

© Siemens AG 2016

Overview

Insulation monitors are used for protection of persons and against fire in non-grounded systems (IT systems). The insulation resistance of the system being monitored is measured against ground.

Such measurements are prescribed in accordance with DIN VDE 0100-410 – Power installations up to 1,000 V – Protection against electric shock.

Technical specifications

			5TT3470	5TT3471
Supply voltage U_c		V AC V DC	220 ... 240 --	-- --
Primary operating range	With AC supply For DC supply	× U_c V DC	0.8 ... 1.1 --	-- --
Frequency range for U_c		Hz	45 ... 400	--
Rated power loss P_v	 For DC supply	VA W	Approx. 2 --	-- Approx. 1
Rated impulse withstand voltage U_{imp}	Terminals A1 to A2 Terminals L to PU Terminals A1, A2 to L, PU Terminals against contacts	kV kV kV kV	< 4 < 4 < 4 < 6	< 4 < 4 < 3 < 6
Measuring circuit			For three-phase and AC systems	For direct voltage systems
Measurement voltage range U_{meas}		V AC V DC	0 ... 500 --	-- 12 ... 280
Primary operating range		× U_{meas}	0 ... 1.1	0.9 ... 1.1
Frequency range for U_{meas}		Hz	10 ... 10000	--
Alarm values	Measuring shunt R_{AL}	kΩ	5 ... 100	5 ... 200
Setting of alarm value	On absolute scale		Infinitely variable	Infinitely variable
Alternating current internal resistance	Internal test resistance	kΩ	> 250	--
Direct current internal resistance	Internal test resistance L+ and L- to PU	kΩ kΩ	> 250 --	-- 75 each
Measurement voltage U_{meas}	Internal	V DC	Approx. 15	--
Max. measurement current I_{meas}	Short circuit	mA	< 0.1	0.2 ... 4 depending on the voltage
Direct interference voltage	Max. permissible	V DC	500	--
Response delay	At R_{AL} 50 kΩ and 1 µF and ∞ to 0.9 × R_{meas} and R_{meas} from ∞ to 0 Ω	 s s	 < 1.3 < 0.7	 0.8 0.4
Switching hysteresis	At R_{meas} 50 kΩ	%	15	10 ... 15
Contacts	µ contact		2 CO	2 CO
Rated operational voltage U_e		V	230 AC	DC 12 ... 280
Rated operational current I_s	Thermal current I_{th} DC-13 at 24 V DC DC-13 at 250 V DC AC-15 AC-15 NO contacts AC-15 NC contacts	A A A A A A	4 -- -- -- 5 2	4 2 0.2 3 -- --
Terminals	± Screw (Pozidriv)		2	2
Conductor cross-sections	Rigid, max. Flexible, with end sleeve, min.	mm^2 mm^2	2 × 2.5 1 × 0.50	
Permissible ambient temperature		°C	-20 ... +60	
Degree of protection	Terminals (acc. to EN 60529) Enclosure (acc. to EN 60529)		IP20 IP40	
Resistance to climate	Acc. to EN 60068-1		20/060/04	

Dimensional drawings

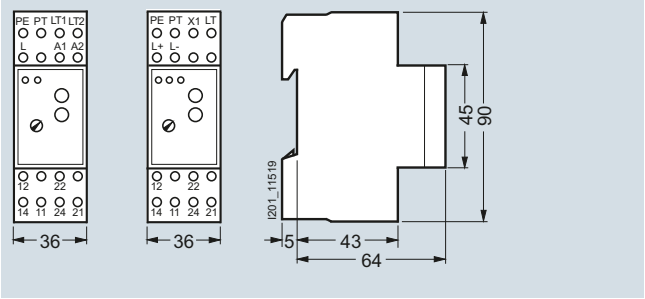

5TT3470 5TT3471

© Siemens AG 2016

More information

Function charts

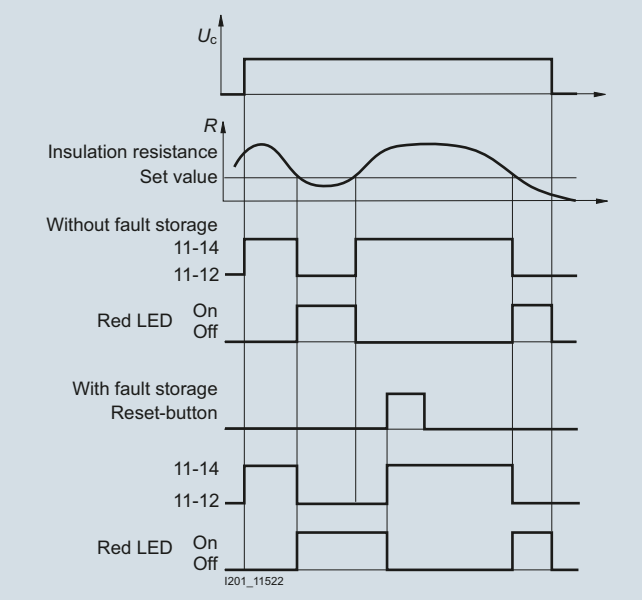

5TT3470, 5TT3471

Typical circuit diagrams

5TT3470 for three-phase and AC systems

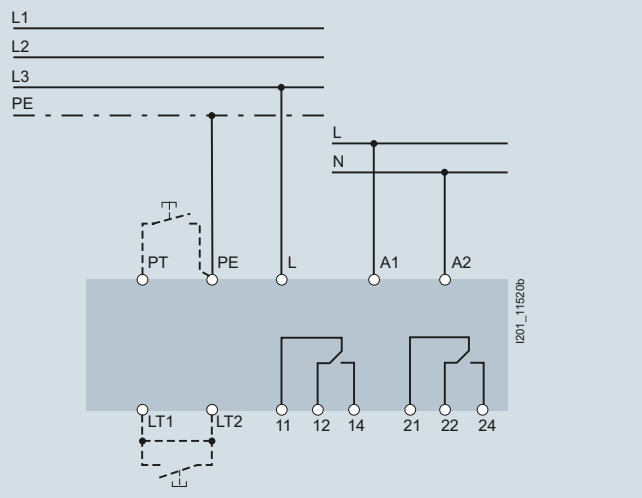

The power supply to terminals A1 – A2 can be taken from the system being monitored. However, in this case it is important to ensure compliance of the voltage range with the technical specifications.

With a jumper LT1 – LT2: A fault signal is not stored; the device is automatically released again if the insulation resistance improves.
Without a jumper LT1 – LT2: the fault signal is stored; pressing the RESET button or an external key at the terminals LT1 – LT2 clears the fault signal.

Pressing the Test button or an external key at the terminals PT – PE simulates a fault.

5TT3471 for direct voltage systems

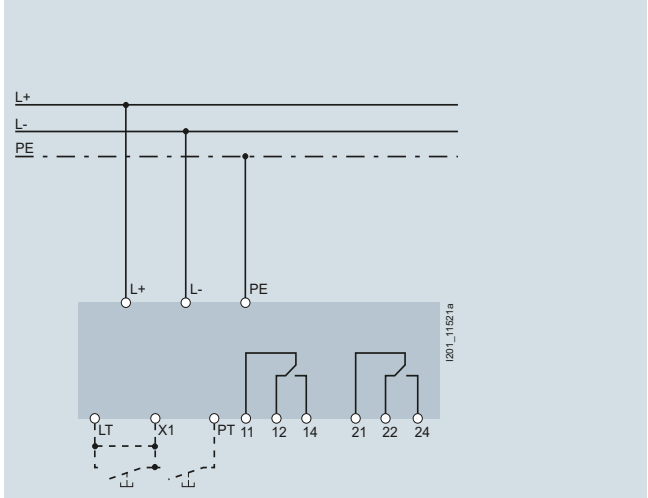

The measurement voltage to the terminals L+ and L- serves at the same time as the power supply.

With a jumper LT – X1: A fault signal is not stored; the device is automatically released again if the insulation resistance improves.
Without a jumper LT – X1: The fault signal is stored; pressing the RESET button or an external key at the terminals LT – X1 clears the fault signal.

Pressing the Test button or an external key at the terminals PT – X1 simulates a fault.

© Siemens AG 2016

Front views

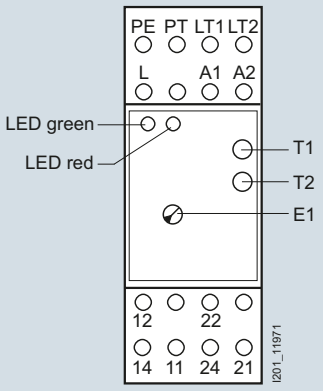

LED green: Status display (ON)
LED red: Insulation fault (AL)
E1: Alarm value adjuster (RAL)
T1: Test
T2: Reset

5TT3470

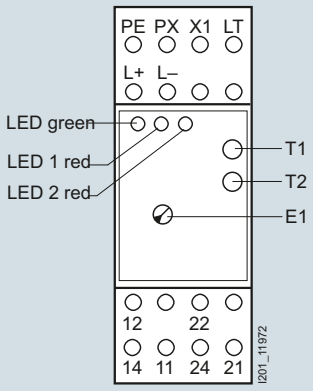

LED green: Status display (ON)
LED 1 red: Insulation fault L– (RE–)
LED 2 red: Insulation fault L+ (RE+)
E1: Alarm value adjuster (RAL)
T1: Test
T2: Reset

5TT3471

5TT3470 for three-phase and AC systems

Direct interference voltage

While direct interference voltages do not damage the devices they often interfere with conditions in the measuring circuit. In a system being monitored, only one insulation monitor should be connected. This must be taken into account if gateways are used.

System capacitances to protective ground C_E do not corrupt the insulation measurement because it is implemented with direct current. However, the response time may be extended in the event of an insulation fault, namely in the magnitude of the time constant R_E times C_E.
The power supply to the insulation monitors can be taken from a separate system or from the one being monitored. However, the above mentioned power supply range must be taken into account.

LEDs:
- Green LED lights up if power supply U_c is applied
- Red LED lights up in the event of an insulation fault

5TT3471 for direct voltage systems

Leakage capacitance

The insulation monitor can be installed in systems with high leakage capacitance to PE. In the case of high-resistance alarm values, a transient alarm signal may occur when switching on the system being monitored due to an existing ground leakage capacitance.
The values of the capacitance C_E given the following set values of R are approximately:
- R = 200 kΩ: C_E > 0.8 µF
- R = 50 kΩ: C_E > 2.0 µF
- R = 20 kΩ: C_E > 4.5 µF

In these applications, you should work without an alarm storage. Due to the measuring function with bridge circuit, the insulation monitor does not respond in the event of a simultaneous, exactly symmetrical ground fault of L+ and L-. However, exactly symmetrical ground faults are highly unlikely in practice.
LEDs:
- Green LED lights up if power supply U_c is applied
- Red LED 1 lights up for insulation fault L+ to PE
- Red LED 2 lights up for insulation fault L- to PE

© Siemens AG 2016

7LQ3 monitors for medical premises

Overview

In areas that conform to Group 2 of DIN VDE 0100-710, any interruption to the examination and/or treatment of patients would place those patients at risk.

Limit monitoring

This is prevented through the use of changeover and monitoring units. These monitor the insulation resistance of the non-grounded IT system, the load current and the temperature of the transformer. If the limit value is exceeded, the insulation monitor gives out a warning signal.

Voltage monitoring

In addition, a special voltage relay monitors the voltage of the power supply and switches to a second power supply if it falls below the specified limit values.

Technical specifications

			Switchover devices 7LQ3361	7LQ3362
Standards			IEC 60364-7-710; DIN VDE 0100-710	
Supply voltage U_v		V AC	230	230/400
Primary operating range		× U_v	0.9 ... 1.1	
Supply frequency f_v		Hz	50 … 60	
Insulation coordination			IEC 60664-1	
Rated impulse withstand voltage		kV	4	
Pollution degree			3	
Max. power loss P_v		W	10.7	
Power section				
Contactors			Mechanically latched; mechanically and electrically locked	
Rated operational current acc. to DIN VDE 0100-710		A	51	32
Rated operational current AC-3		A	113	71
Short-circuit protection acc. to DIN VDE 0100-710 • Max. backup protection	 gG	 A	 63	
Switchover time		s	0.1 ... 10	
Measuring circuit insulation monitoring				
Response value R_{an}		kΩ	50	
Response deviation			EN 61557-8	
Response time t_{an} at R_{an} = 50 kΩ, C_e = 1 µF	R_F from ∞ to 0.5 × R_{an} R_F from ∞ to 0 kΩ	s s	< 1.3 < 0.7	
Hysteresis		%	15	
Measurement voltage U_m		V DC	Approx. 15	
Measurement current $I_{m\ max}$ (at R_F = 0 Ω)		µA	< 50	
Internal resistance DC R_i		kΩ	> 250	
Impedance Z_i at 50 Hz		kΩ	> 250	
Permissible direct interference voltage U_{fg}		V DC	< 300	
Test button			External/internal	
Measuring circuit load current monitoring				
Response value, adjustable with external transformer 50/5 A, Class 1		A	5 … 50	
Hysteresis		%	4	
Temperature influence		%/°C	≤ 0.05	
Delay t_v adjustable		s	0.1 ... 20	
Measuring circuit, temperature monitoring				
Response value		kΩ	3.2 ... 3.8	
Release value		kΩ	1.5 ... 1.8	
PTC thermistor	Acc. to DIN 44081/44082	Unit(s)	1 … 6 in series	
Measuring circuit, voltage monitoring				
Response values	ON-switching OFF-switching	 × U_c	2 % hysteresis 0.9	4 % hysteresis 0.9
Phase failure detection	At L1, L2 or L3	ms	--	100
N-conductor monitoring			--	Yes

© Siemens AG 2016

			Switchover devices 7LQ3361	7LQ3362
Connection				
Terminals				
• Load circuit	Feeder terminals Output terminals	mm^2	4 ... 16	
• Communication	Status signals Fault indications	mm^2	2.5	
Environmental conditions				
Permissible ambient temperature		°C	-20 ... 45	
Mounting position			Vertical	

			Insulation monitors 7LQ3354	7LQ3355
Standards			EN 61557-8	
Supply voltage U_v		V AC	230	
Primary operating range		× U_v	0.9 ... 1.1	
Supply frequency f_v		Hz	50 … 60	
Max. power loss P_v		VA	Approx. 7	
Rated line voltage U_n (measuring circuit)		V AC	0 … 300	
Rated frequency f_n		Hz	10 … 1000	
EMC immunity to interference			IEC 61000-6-2	
EMC emitted interference			IEC 61000-6-3	
Insulation coordination			IEC 60664-1	
Rated impulse withstand voltage		kV	4	
Pollution degree			3	
Flammability class			UL 94V-0	
Measuring circuit insulation monitoring				
Response value R_{an}		kΩ	50	50 ... 500
Response deviation			EN 61557-8	
Response time t_{an} at R_{an} = 50 kΩ, C_e = 1 µF	R_F from ∞ to 0.5 × R_{an} R_F from ∞ to 0 kΩ	s s	< 1.3 < 0.7	
Hysteresis		%	15	
Measurement voltage U_m		V DC	Approx. 15	
Measurement current $I_{m\ max}$ (at R_F = 0 Ω)		µA	< 50	
Internal resistance DC R_i		kΩ	> 250	
Impedance Z_i at 50 Hz		kΩ	> 250	
Permissible direct interference voltage U_{fg}		V DC	< 300	
Measuring circuit load current monitoring				
Response value, adjustable with external transformer 50/5 A, Class 1		A	5 … 50	
Hysteresis		%	4	
Temperature influence		%/°C	≤ 0.05	
Delay t_v adjustable		s	0.1 ... 20	
Measuring circuit, temperature monitoring				
Response value		kΩ	3.2 ... 3.8	
Release value		kΩ	1.5 ... 1.8	
PTC thermistor	Acc. to DIN 44081/44082	Unit(s)	1 … 6 in series	
Display and control elements				
Operating error	Acc. to IEC 61557-8			
LED display				
• Current and temperature monitoring			One red and one green LED	
• Ready-to-run			Green	
• Insulation fault			Red	
• Line breakage monitoring of the isolation measuring circuit			Red	
• Display of current insulation resistance			--	11-step LED chain
Pushbuttons			TEST and RESET	

© Siemens AG 2016

7LQ3 monitors for medical premises

			Insulation monitors 7LQ3354	7LQ3355
Output relay				
Contacts for	Overtemperature Overload Insulation fault		2 CO 2 CO 2 CO	
Mode of operation			Working current	
Contacts	AC-15 NO contacts AC-15 NC contacts	A AC/V AC A AC/V AC	3/230 1/230	
Electrical service life	AC-15, 1 A, 230 V AC	Switching cycles	30000	
Thermal current		A AC	5	
Connection				
Terminals	± Screw (Pozidriv)		2	
• Conductor cross-sections • Insulation fault	Rigid Flexible, with end sleeve	mm^2 mm^2	2 × 2.5 1 × 2.5	
Environmental conditions				
Permissible ambient temperature		°C	-20 … +60	
Climatic withstand capability	Acc. to EN 60068-1		20/060/04	
Degree of protection	Acc. to EN 60529		IP20, with connected conductors	
Mounting position			Any	
Vibration stress • Amplitude • Frequency	Acc. to IEC 60068-2-6	 mm Hz	 0.35 10 … 55	

			Test and signaling panels 7LQ3356	7LQ3357
Standards			DIN VDE 0100-710; IEC 60364-7-710	
Rated voltage U_n		V AC/DC	24	
Rated impulse withstand voltage	Acc. to IEC 60664-1	kV	4	
Voltage range		AC DC	0.8 ... 1.1 x U_n 0.9 ... 1.2 x U_n	
Rated current per input		mA	0.25	
Rated consumption		VA	6	
Rated operating mode			Continuous operation	
Pollution degree	Acc. to IEC 60664-1		2	
Degree of protection • Enclosure • Terminals	 Acc. to IEC/EN 60529 Acc. to IEC/EN 60529		 IP40 IP20	
Flammability class			UL 94V-0	
Vibration stress • Amplitude • Frequency	Acc. to IEC/EN 60068-2-6	 mm Hz	 0.35 10 … 55	
Climatic withstand capability	Acc. to IEC/EN 60068-1		20/045/04	
Terminal marking			EN 50005	
Wire connections				
• Solid		mm^2 mm^2	1 × 1.5 2 × 0.5	
• Strand		mm^2 mm^2	1 × 1 2 × 0.2	
• Strand with sleeve		mm^2	1 × 0.5	
Conductor mounting			Box terminals with wire protection	
Device dimensions		mm	80 × 160 × 57	82 × 150 × 57
Temperature range		°C	-20 ... +45	

© Siemens AG 2016

			Current transformers Class 1 7LQ3358
Standards			IEC/EN 60044-1, VDE 0414-44-1
Rated operational voltage U_c		V AC	230
Rated frequency		Hz	50/60
Test voltage	50 Hz, 1 min	kV	3
Rated transformation ratio k_n		A	50/5
Primary rated current		A	50
Secondary rated current		A	5
Rated power		V/A	1.5
Class			1
Rated frequency		Hz	50 ... 60
Highest voltage at equipment/insulation level		kV	0.72/3
Overcurrent factor • Thermal rated short-time current • Thermal rated continuous current		 × I_n × I_n	FS5 60 1.2
Expanded current range		%	120
Permissible ambient temperature		°C	-20 … +60

			Test and signaling combination for insulation monitors 7LQ3360
Standards			DIN VDE 0100-710; IEC 60364-7-710
Rated voltage U_n		V AC	24
Voltage range		AC	0.8 ... 1.1 × U_n
Connected load		W	0.5
Rated operating mode			Continuous operation
EMC • Static discharge • RF irradiation • Rapid transients • Surge voltage (surge)	 Acc. to IEC/EN 61000-4-2 Acc. to IEC/EN 61000-4-3 Acc. to IEC/EN 61000-4-4 Acc. to IEC/EN 61000-4-5	 kV V/m kV kV	 8 (air discharge) 10 2 1
Degree of protection			IP30
Amplitude		mm	0.35
Frequency		Hz	10 ... 55
Temperature range		°C	-5 ... +55
Climatic withstand capability	Acc. to IEC/EN 60068-1		05/055/04
Terminal marking			EN 50005
Wire connections • Solid • Strand with sleeve and plastic collar • Strand with sleeve and plastic collar • Strand with sleeve	 DIN 46228-1/-2/-3/-4 DIN 46228-1/-2/-3	 mm^2 mm^2 mm^2 mm^2	 1 × 4 1 × 2.5 2 × 1.5 2 × 2.5
Conductor mounting			Box terminals with wire protection
Device dimensions		mm	80 × 80 × 35

© Siemens AG 2016

7LQ3 monitors for medical premises

			Voltage relays	
			5TT3411	**5TT3412**
Rated operational voltage U_c		V AC	230	230/400
Overload capability		× U_c	1.15	1.1
Rated frequency		Hz	50/60	
Response values	ON-switching OFF-switching	 × U_c	2 % hysteresis 0.9	4 % hysteresis 0.9
Minimum contact load		V/mA	10/100	
Phase failure detection	At L1, L2 or L3	ms	--	100
N-conductor monitoring			--	Yes
Rated insulation voltage U_i	Between coil/contact	kV	4	
Contacts	AC-15 NO contacts AC-15 NC contacts		3 2	3 1
Electrical service life in switching cycles	AC-15, 1 A, 230 V AC		5×10^5	
Rated impulse withstand voltage	Acc. to IEC 60664-1	kV	4	
Pollution degree			2	
Terminals	± Screw (Pozidriv)		2	
Conductor cross-sections • Rigid • Flexible, with end sleeve		 mm^2 mm^2	 2 × 2.5 2 × 1.5	
Permissible ambient temperature		°C	-20 … +60	
Climatic withstand capability	Acc. to EN 60068-1		20/060/04	

	IT line transformers 4AT3/4AT4
In the case of isolating transformers used to set up medical IT systems, overcurrent protective devices are only permissible as protection against short circuits. To protect the isolating transformers against overload they are fitted with monitoring devices that signal an excessive rise in temperature (e.g. 7LQ3354 insulation monitors).	
Standards	EN 61558-2-15
Safety class	I
Static shield between primary and secondary winding	With insulated connection
Thermistor transformer protection	Warning in the event of thermal overload[1)]
Insulation monitoring	With center tap
Short-circuit voltage u_z	≤ 3 %
No-load current i_0 • Starting current (rush), max.	≤ 3 % 8 x I_{1N}
Rated ambient temperature t_a/thermal class	55 °C/H

1) Tripping units must be ordered separately.

Accessories

SIRIUS 4AT isolating transformers



Further information about the SIRIUS 4AT isolating transformers can be found in Catalog IC 10 · 2016.

© Siemens AG 2016

Characteristic curves

7LQ3354 and 7LQ3355 insulation monitors

The following diagrams show the function of the measuring circuits of the temperature monitors (top left), the load current monitors (bottom left) and the insulation monitors (right).

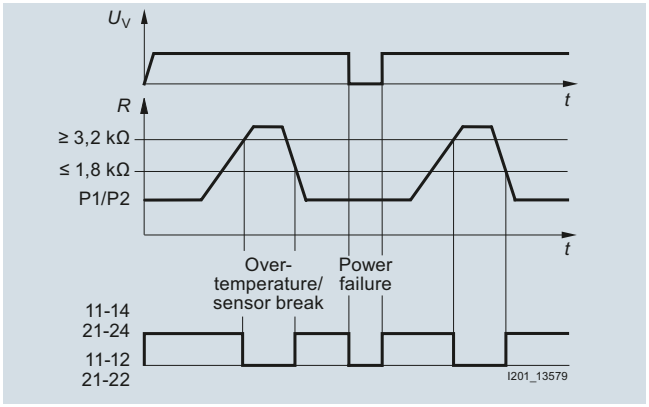

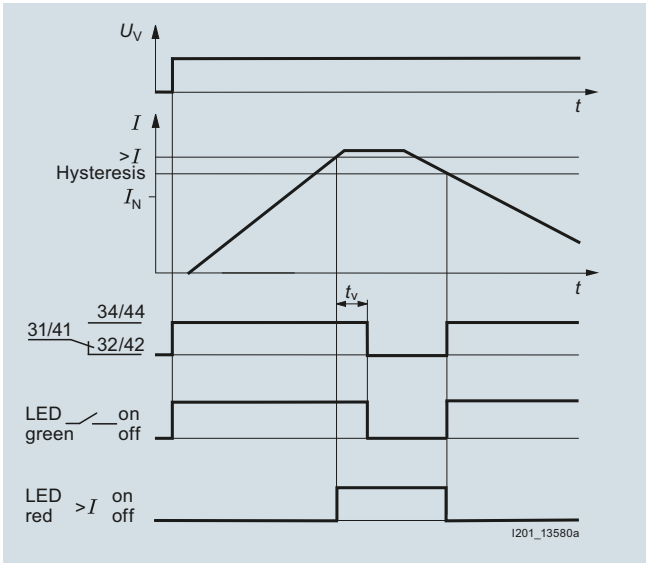

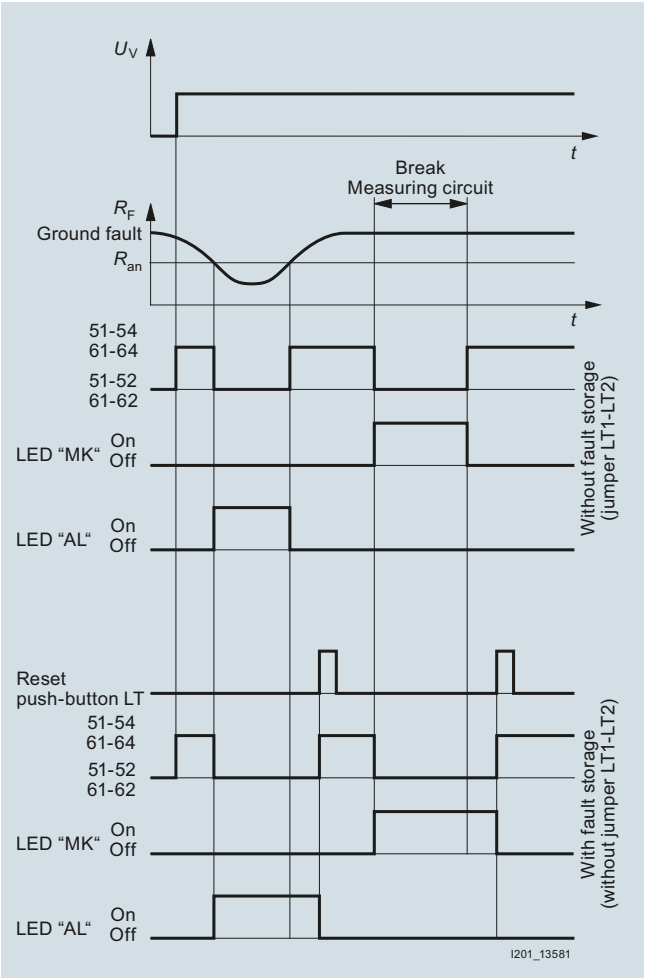

© Siemens AG 2016

7LQ3 monitors for medical premises

Test and signaling panels

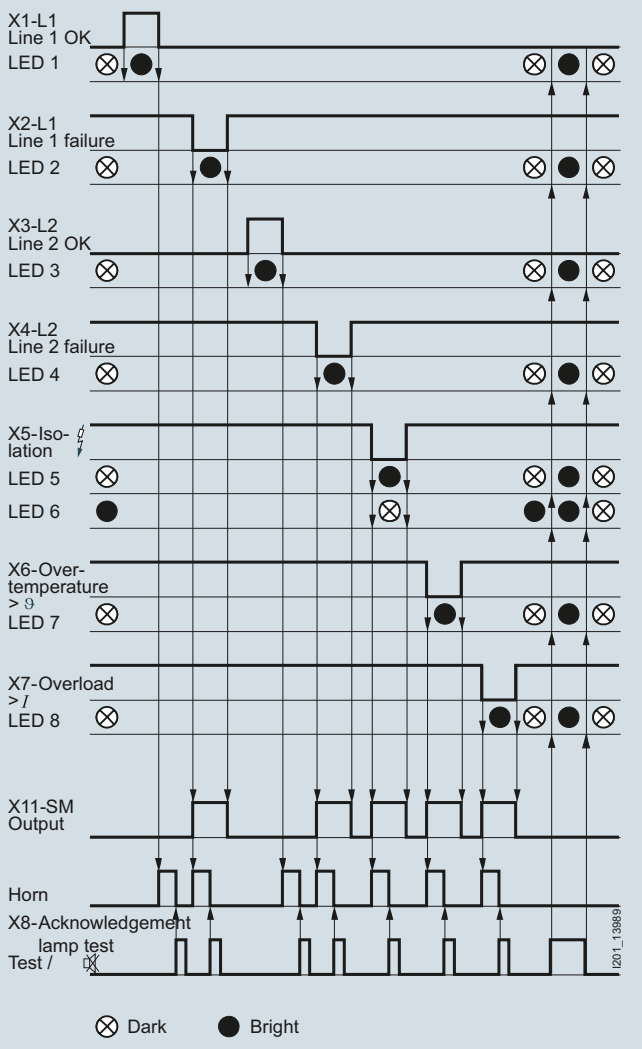

7LQ3356, 7LQ3357

Test and signaling combination for insulation monitors

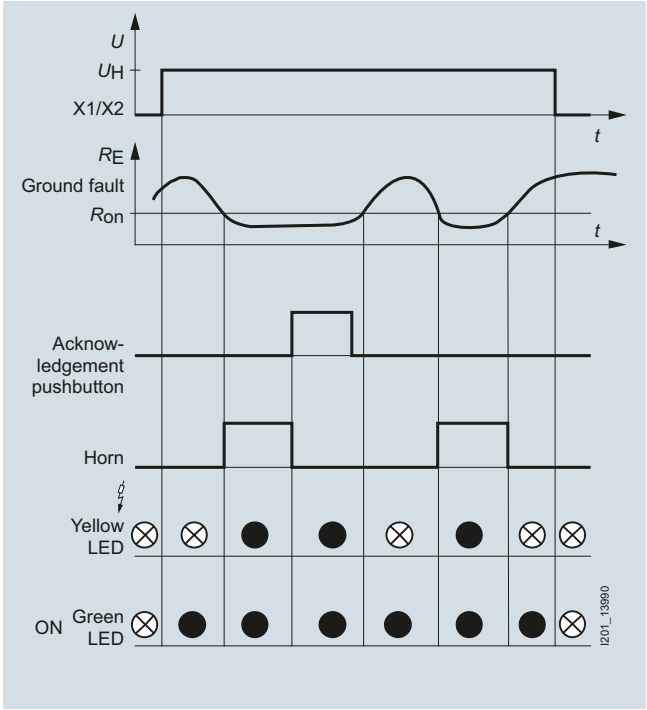

7LQ3360

Voltage relays

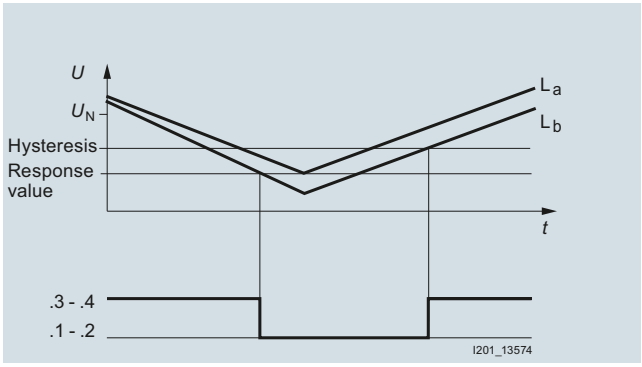

5TT3411

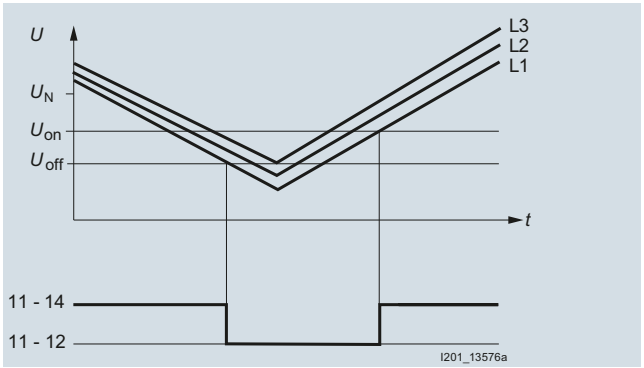

5TT3412

The voltage relay switches at a phase asymmetry of approx. 6 % to 8 %, regardless of the response values for undervoltage. The above diagram also shows the timing interval.

© Siemens AG 2016

Dimensional drawings

Switchover devices

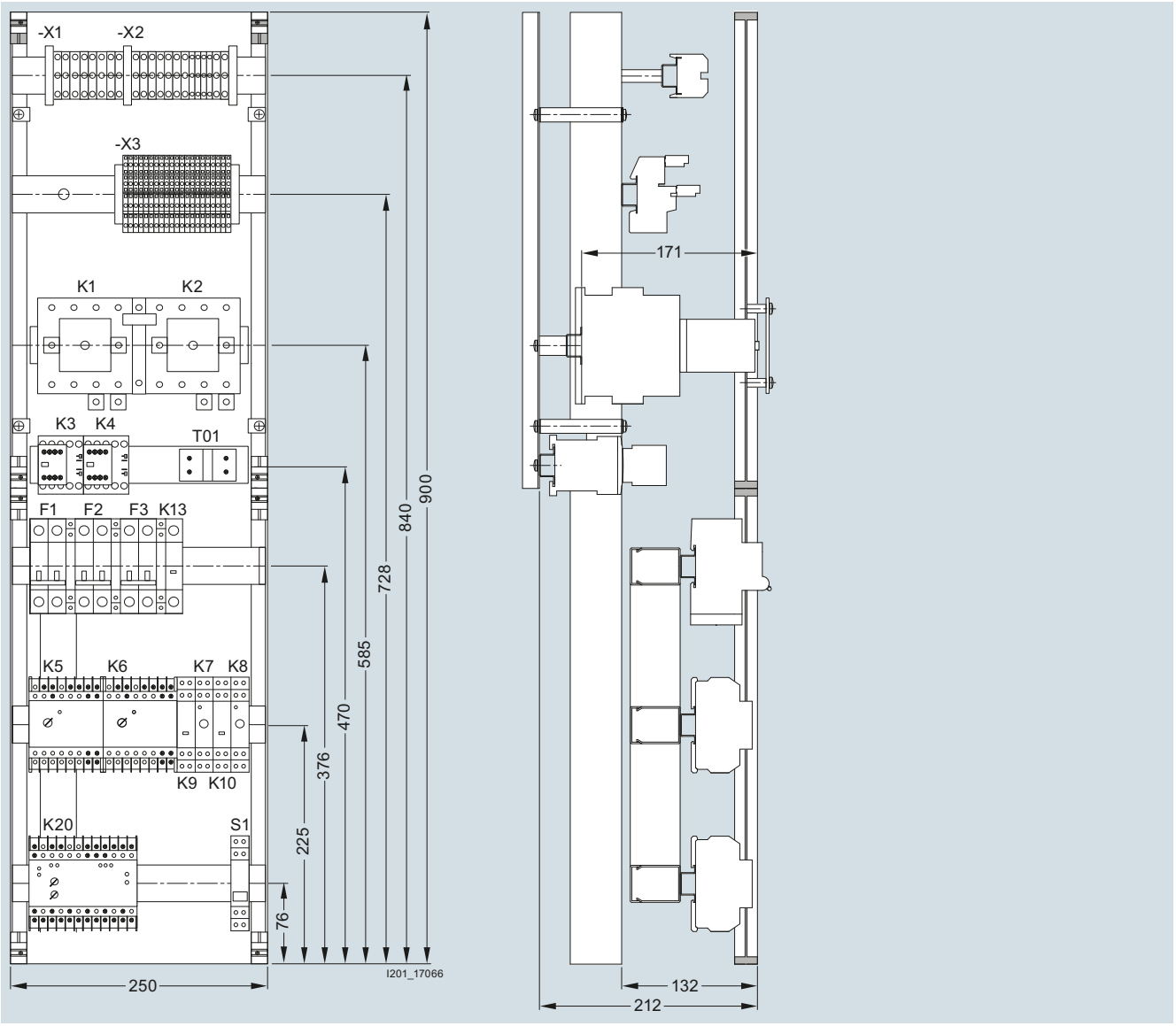

7LQ3361

The 7LQ3361 and 7LQ3362 switchover devices are designed for mounting in series ALPHA 630 DIN floor-mounted distribution boards and ALPHA AS side-by-side switchgear cabinets with a cabinet depth of at least 320 mm.
More information about the distribution boards can be found in Catalog LV 10.
Contact your local Siemens representative for information about additional versions.

© Siemens AG 2016

7LQ3 monitors for medical premises

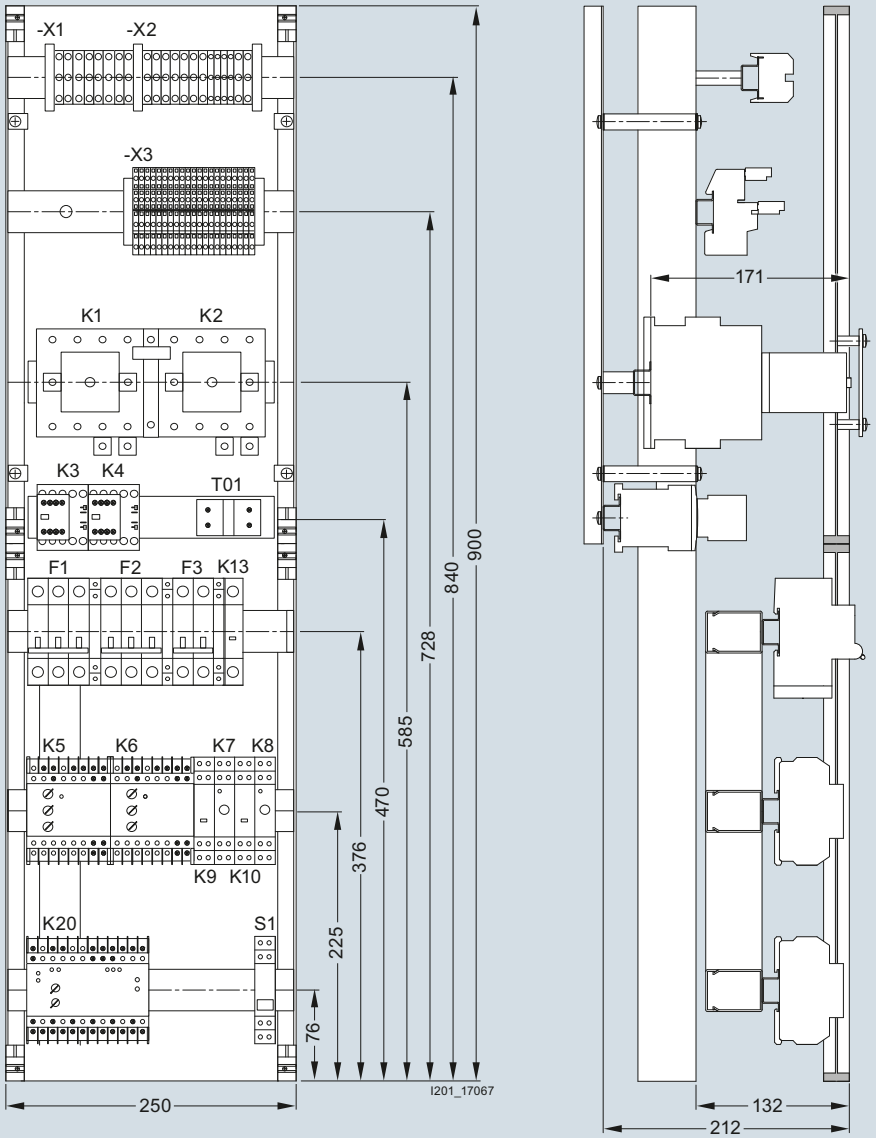

7LQ3362

The 7LQ3361 and 7LQ3362 switchover devices are designed for mounting in series ALPHA 630 DIN floor-mounted distribution boards and ALPHA AS side-by-side switchgear cabinets with a cabinet depth of at least 320 mm.
More information about the distribution boards can be found in Catalog LV 10.
Contact your local Siemens representative for information about additional versions.

Insulation monitors

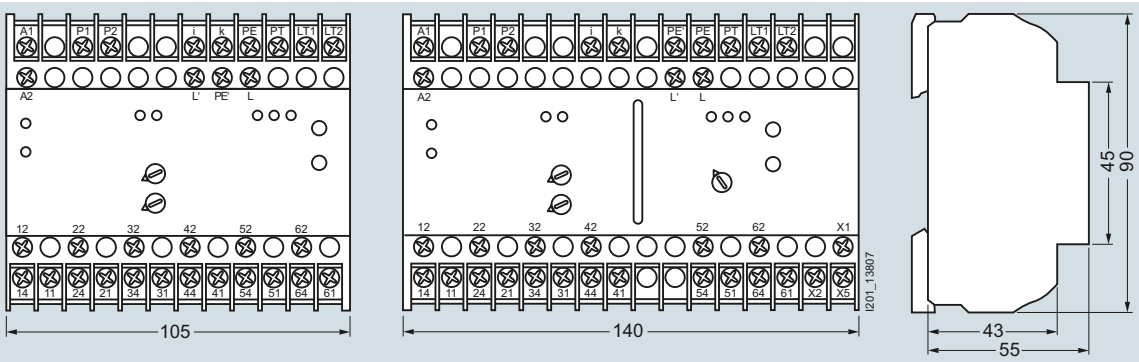

7LQ3354 7LQ3355

© Siemens AG 2016

Test and signaling panels

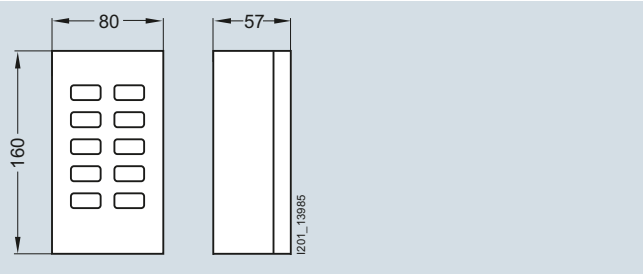

7LQ3356

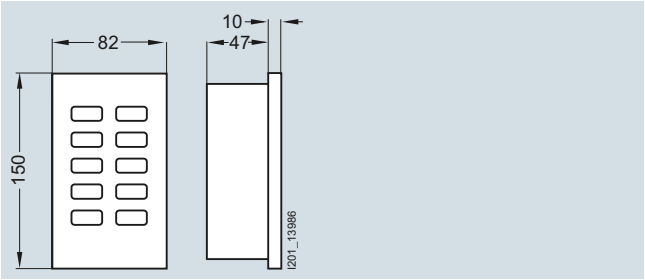

7LQ3357

Current transformers

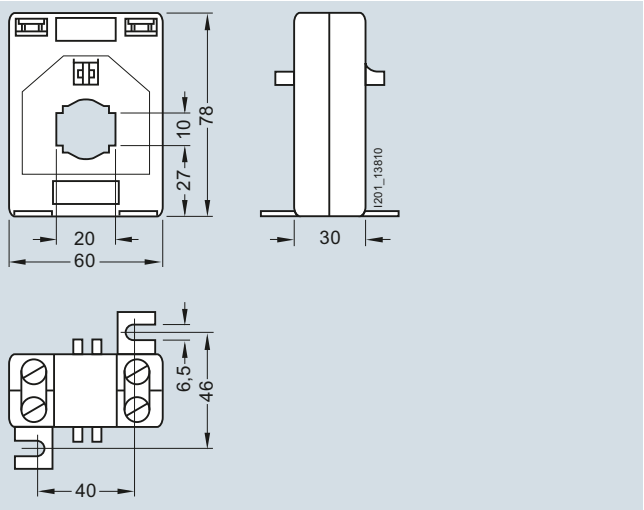

7LQ3358

Test and signaling combination for insulation monitors

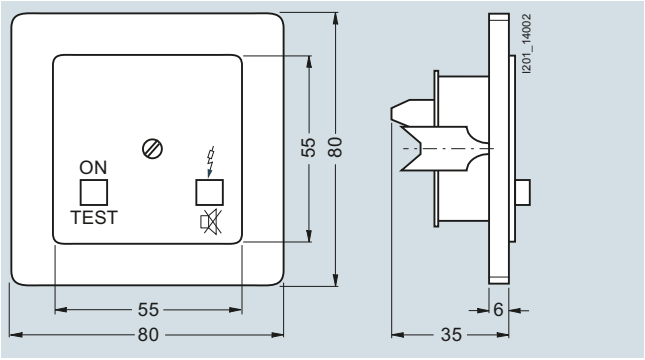

7LQ3360

Voltage relays

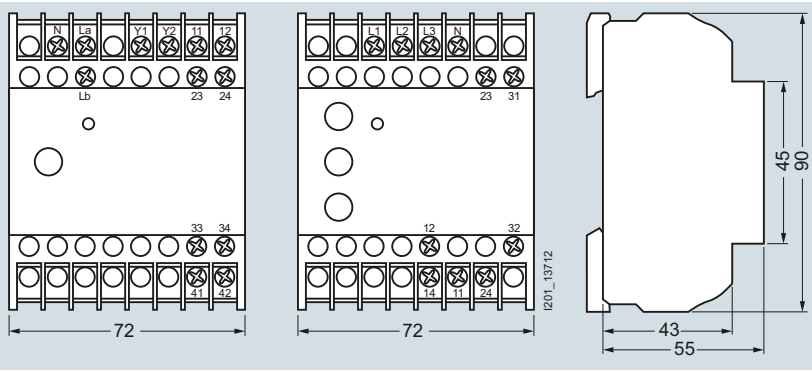

5TT3411

5TT3412

© Siemens AG 2016

Circuit diagrams

Switchover devices

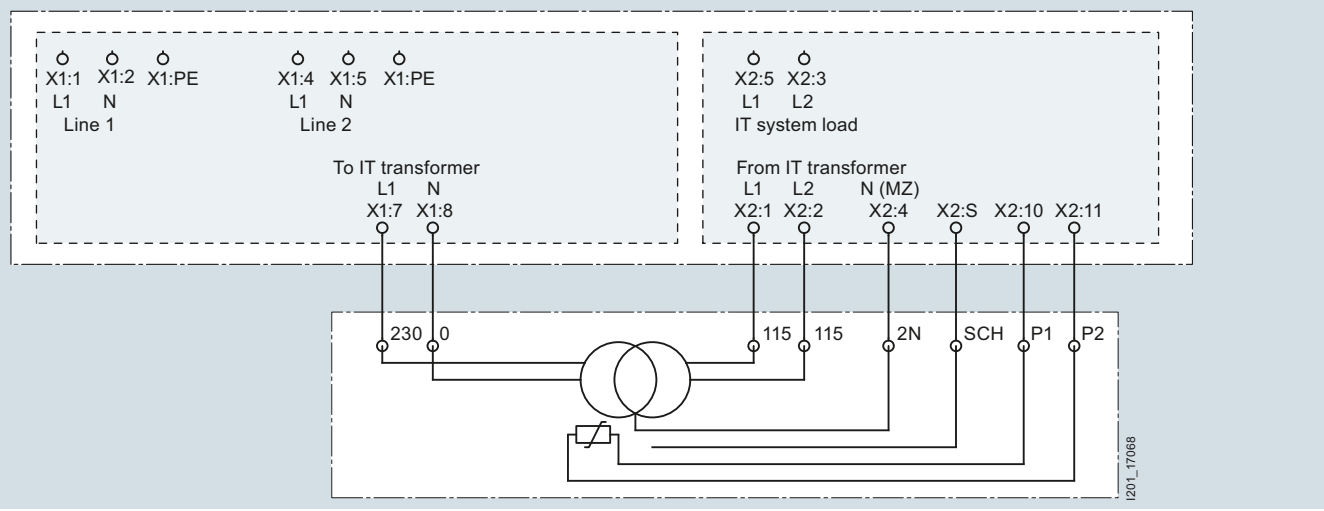

7LQ3361

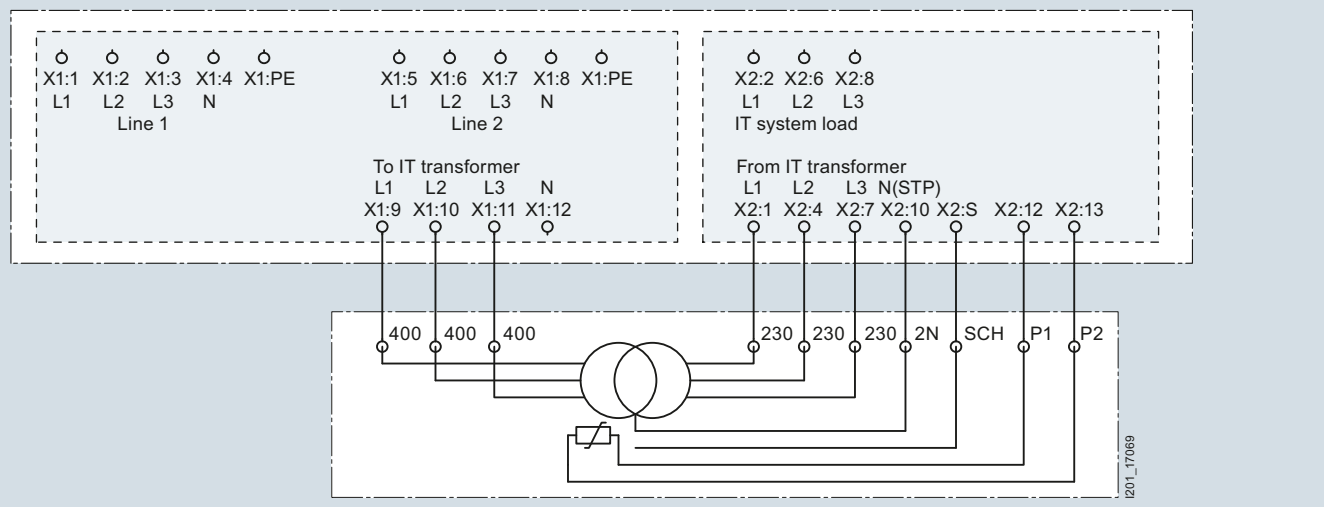

7LQ3362

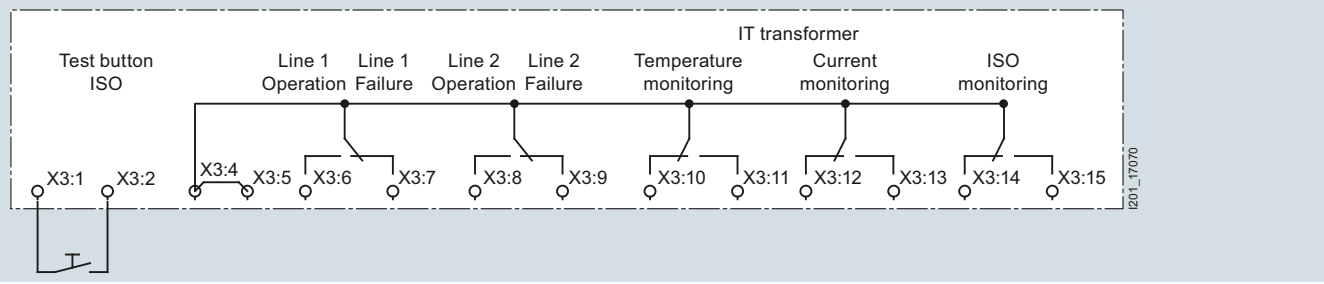

Circuit diagram of 7LQ3361 and 7LQ3362 switchover device to test signaling device (e.g. 7LQ3356 or 7LQ3357 test and signaling panels)

© Siemens AG 2016

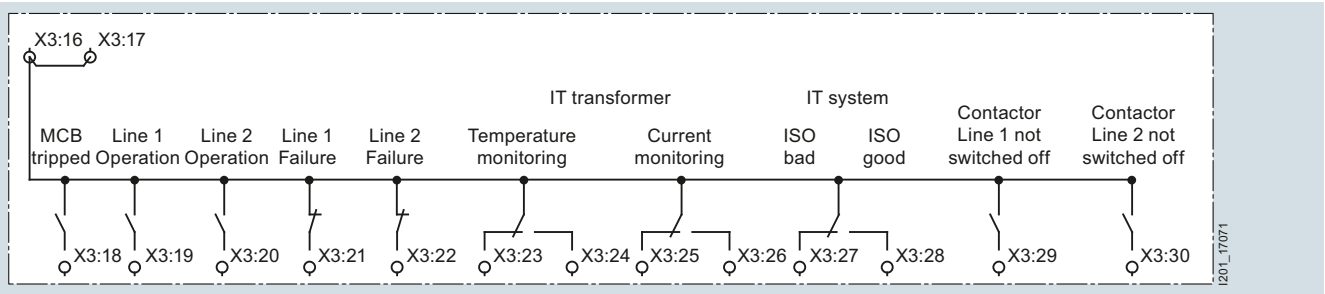

Circuit diagram of 7LQ3361 and 7LQ3362 switchover device to the central building control system devices

Insulation monitors

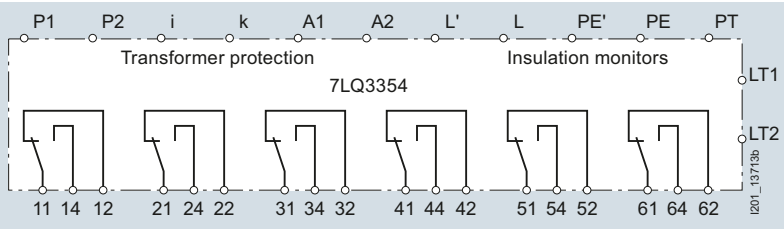

7LQ3354

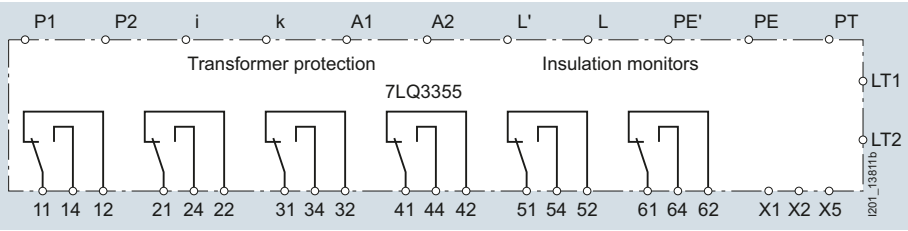

7LQ3355

Test and signaling panels

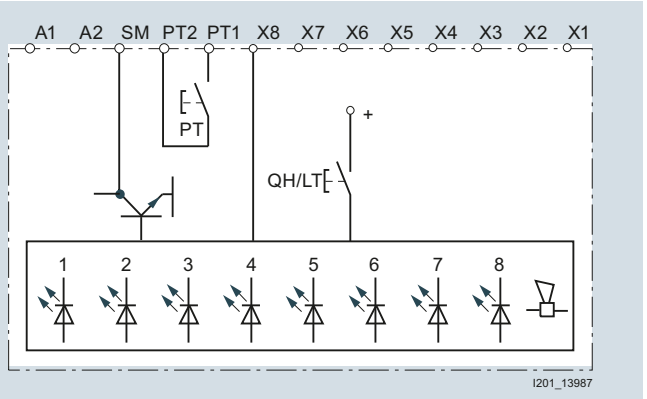

7LQ3356, 7LQ3357

Test and signaling combination for insulation monitors

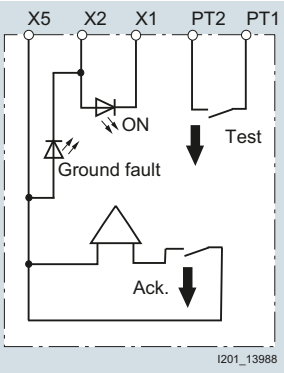

7LQ3360

Voltage relays

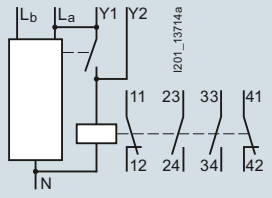

5TT3411

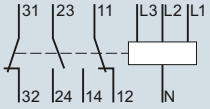

5TT3412

Use L_a and L_b for monitoring 2 phases or 2-channel monitoring of 1 phase. L_b must be jumpered with L_a if only L_a is used.

© Siemens AG 2016

More information

Connection examples

Switchover devices

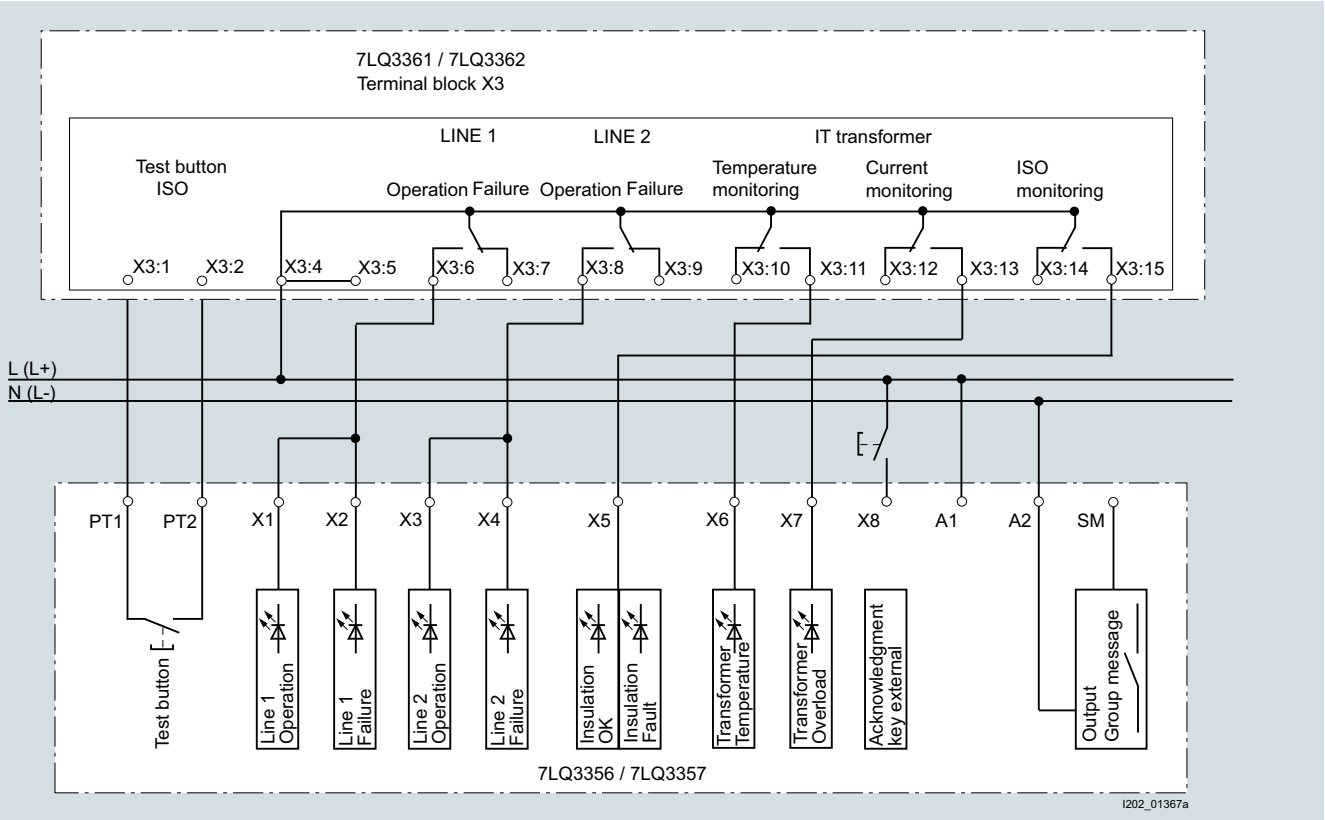

7LQ3361, 7LQ3362

Insulation monitors

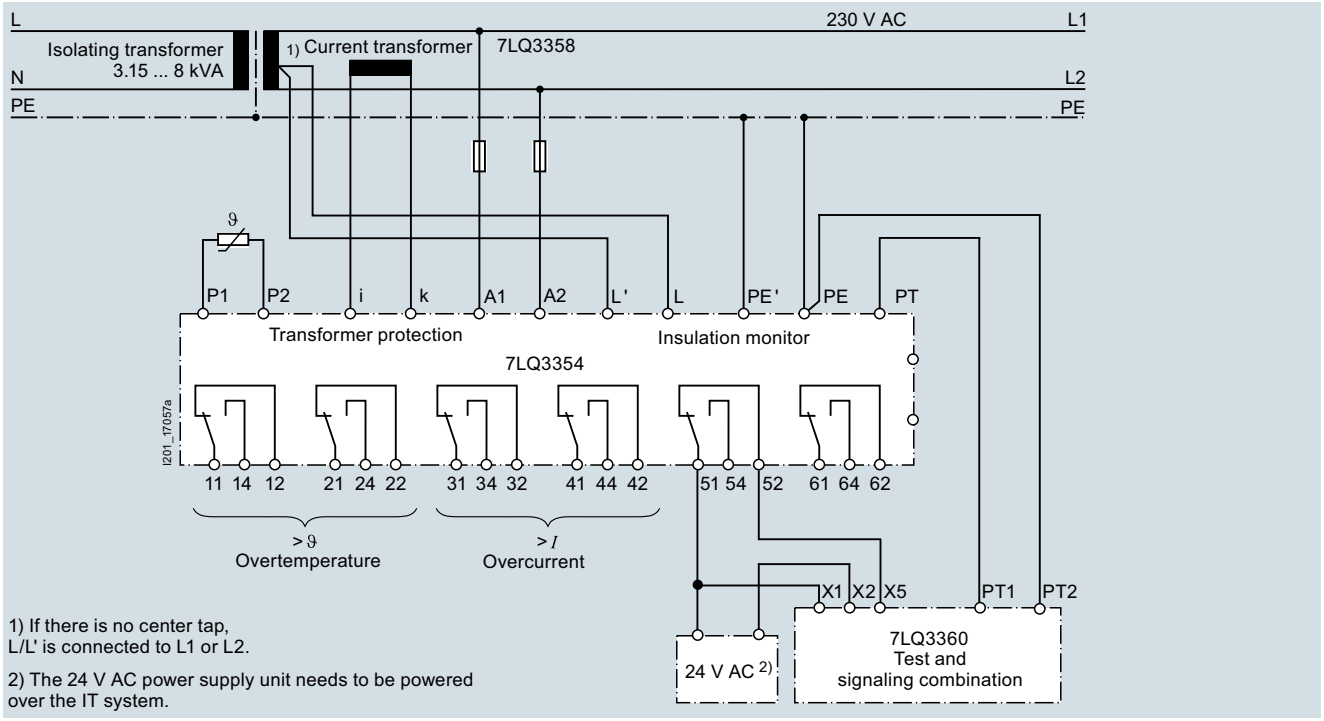

7LQ3354

© Siemens AG 2016

Insulation monitors

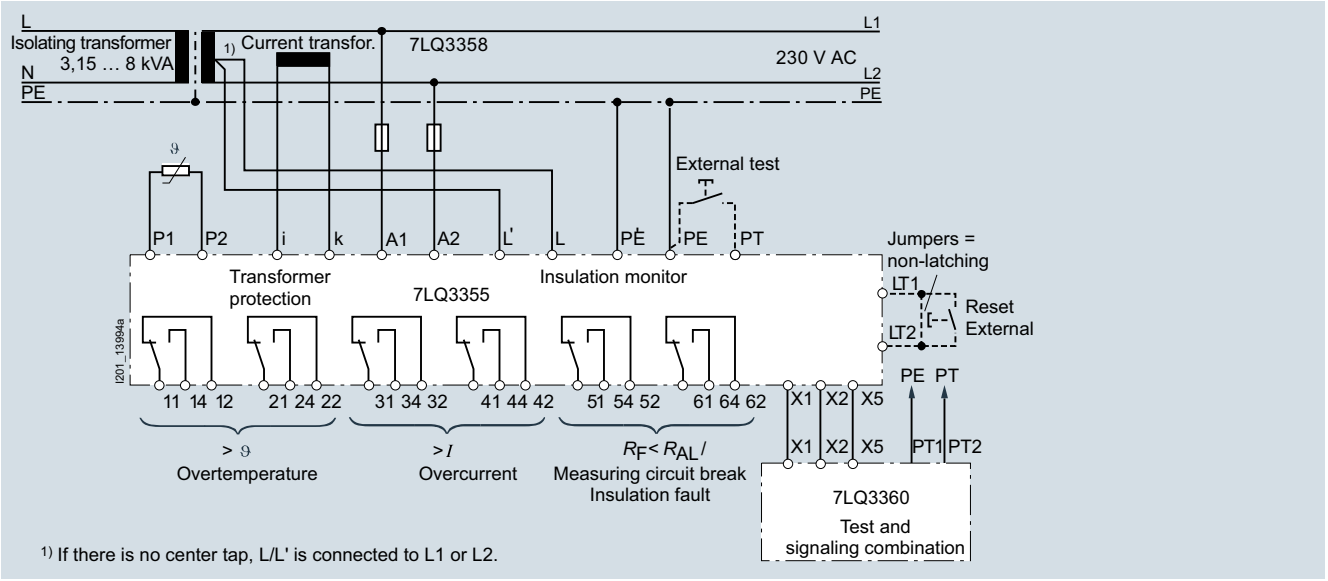

7LQ3355

Up to four 7LQ3360, 7XV9306, 7XV9304 or 7XV9302 test and signaling combinations can be connected; cf. connection example and comparison of contact assignment between previous and current test and signaling combinations

Test and signaling panels

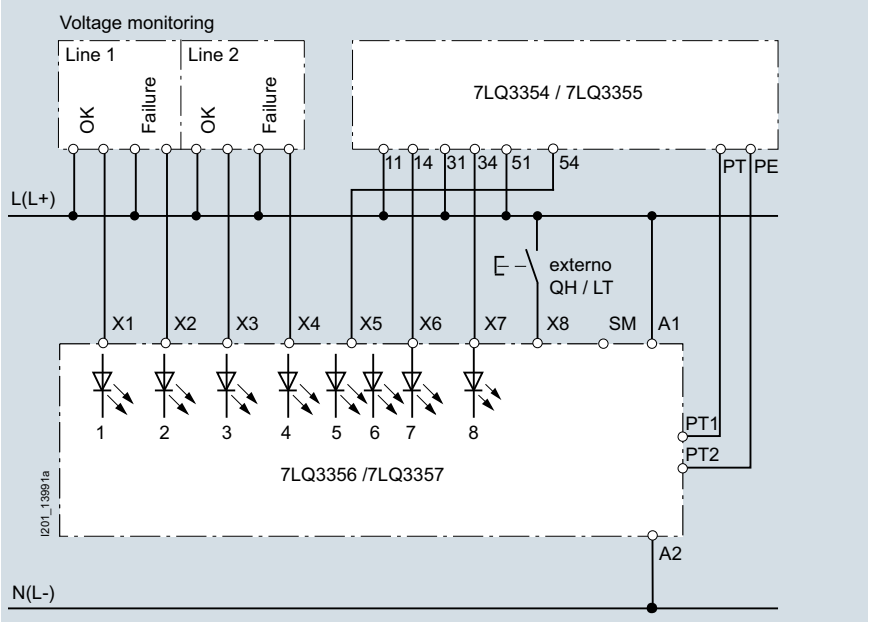

X1 ... X7	Fault signaling inputs
X8	Acknowledgement horn/lamp test
SM	Central indication output
PT1, PT2	Test button for insulation monitors

7LQ3356, 7LQ3357

© Siemens AG 2016

7LQ3 monitors for medical premises

Connection example for 7LQ3355 insulation monitors with 7XV9306 test and signaling combination

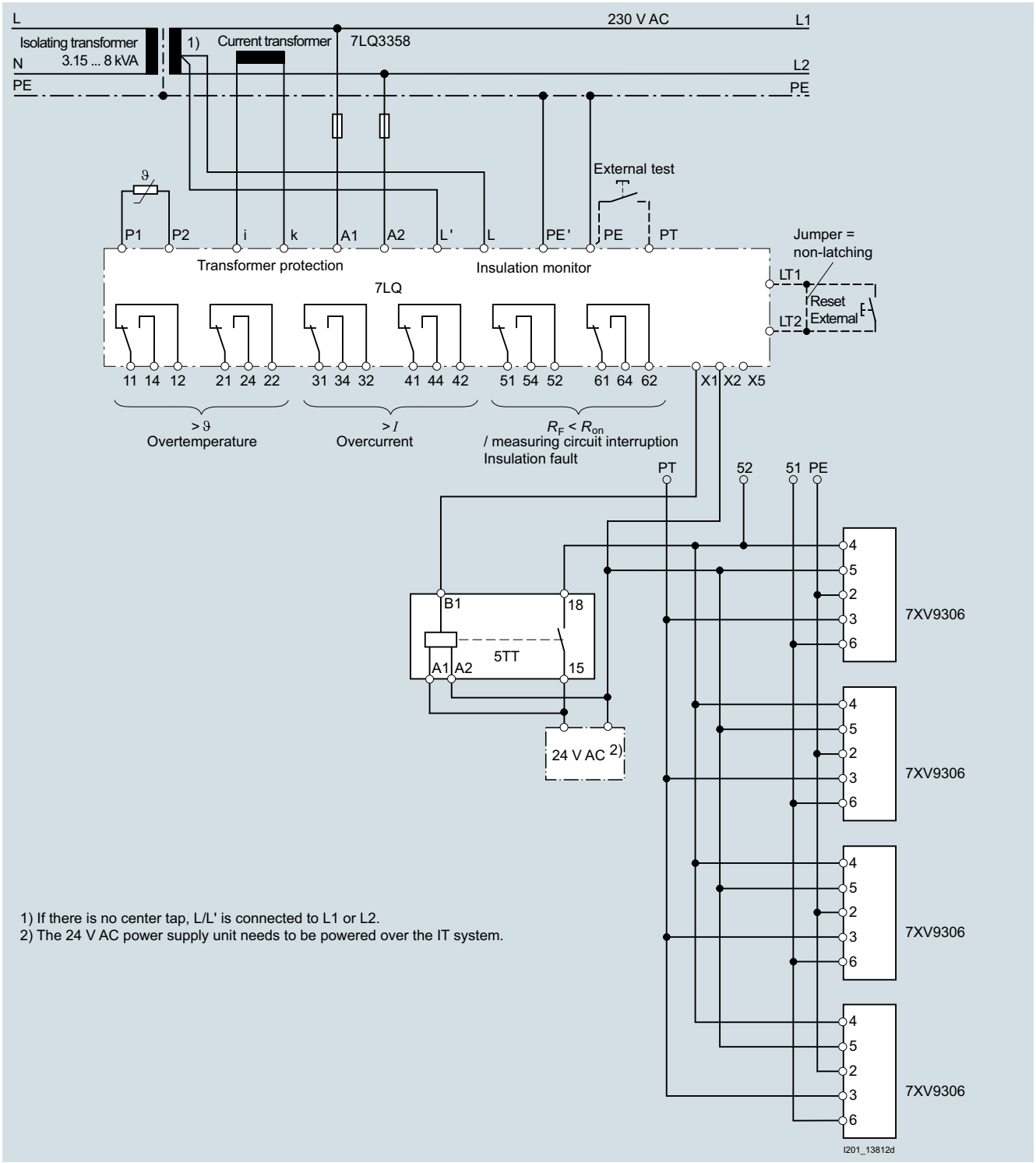

7LQ3355

Up to four test and signaling combinations (e.g. the 7LQ3360 test and signaling combination and the previous 7XV9306, 7XV9304 or 7XV9302 test and signaling combinations (now no longer available) can be connected.

An external 24 V AC (e.g. 4AC3616) transformer is required to power the test and signaling combination.

© Siemens AG 2016

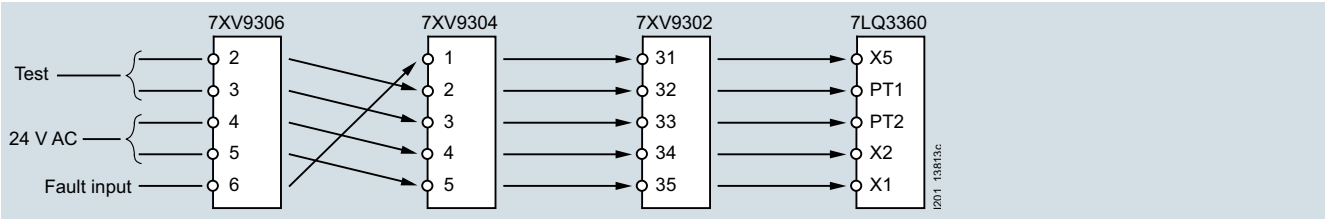

Comparison between the contact assignment for the previous, no longer available test and signaling combinations 7XV9306, 7XV9304 and 7XV9302 and the contact assignment for the current 7LQ3360 test and signaling combination.

Monitoring of medical premises

Medical premises are all rooms used for the examination or treatment of persons or animals. Besides doctors' surgeries and clinics, these also include hydro-therapeutic and physical therapeutic treatment and massage rooms.

TÜV-certified switchover and monitoring devices are used for a reliable power supply. The insulation monitors and voltage relays in the switchover and monitoring devices need to comply with the requirements of standard DIN VDE 0100-710 and IEC 60364-7-710.

Medical premises were divided up into three groups in DIN VDE 0100-710, which was published in 2002.

For premises in groups 0 and 1, the standard requires, among other things, implementation of the system type TN-S and residual current protective devices (RCDs) for protection against excessively high touch voltages.

The premises of group 2 are defined as follows:

- The system must not be disconnected in the event of a first short circuit to frame or to ground or if the general power supply fails
- Repetition of treatment is unacceptable for patients or it is impossible to obtain results of examinations again
- An irregularity (a fault) in the power supply can cause danger to life
- A piece of equipment used for medical purposes, which is used occasionally for applications in accordance with DIN VDE 0100-710.2.7, should be assigned to group 2

Typical locations in group 2 are anesthetic rooms, operating rooms and recovery rooms in hospitals, clinics or doctors' surgeries, as well as equipment used in veterinary medicine.

Standard DIN VDE 0100-710 makes the following stipulations:

- Constant monitoring of the power supply on the preferred supply line and on the second supply line
- Automatic changeover to the 2nd supply line within a defined time (< 0.5 s or < 15 s)
- Reliable operation even if a fault occurs (one-fault security)

The switchover device monitors the supply voltage on the preferred and second supply line for undervoltage and power failure. As soon as a voltage drop to a defined value is determined, the voltage relays respond and the switchover device automatically switches to the second supply line. As soon as the power is restored on the preferred supply line, the system switches back to it.

IT system

In the IT system name, the first letter describes the grounding relationships of the current source. ***I*** stands for insulation of all live parts from ground or connection of a point to ground via an impedance. The second letter identifies the grounding relationships of the body of the electrical system.

T means that the body is directly grounded, independently of any existing grounding of a point of the power source.

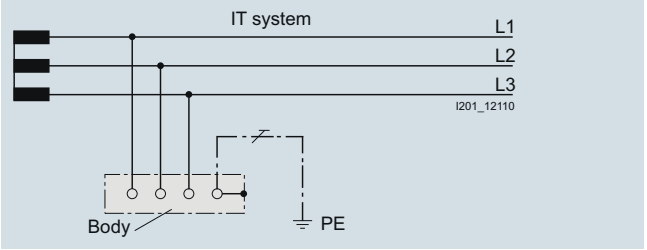

Medical IT systems

Standard DIN VDE 0100-710 makes the following stipulations for a medical IT system in group 2:

- The medical IT system must be used for socket outlet circuits in the patient environment. This also applies for circuits supplying operating room lights
- At least one IT system is required for each room group
- Separate circuits must be provided for multiple socket outlets
- First faults must not lead to disconnection of the system

The IT system is powered by an isolating transformer or an independent power source (such as a battery). The special feature is that no active conductors in this network are linked directly to ground. This has the advantage that only a small residual current can flow in the event of an insulation fault. This is essentially dictated by the leakage capacitances and is harmless to patients and staff. The upstream fuse element does not respond so that the power supply, and therefore operation, is maintained, even in the event of a phase-to-ground fault. The high reliability of an IT system is ensured by continuous insulation monitoring. The insulation monitor detects insulation faults as they develop and signals in good time if a value falls below a limit value, before any further insulation faults can lead to an unexpected shutdown. The temperature of the transformer and the transformer load continue to be monitored constantly. Any exceeding of limit values is signaled immediately.

© Siemens AG 2016

7LQ3 monitors for medical premises

Insulation monitoring

The 7LQ3354 and 7LQ3355 insulation monitors are used to monitor the insulation resistance of non-grounded IT systems in medical premises. They also simultaneously monitor the load current and the temperature of the IT isolating transformer. The devices can monitor both three-phase and AC systems.

Temperature measurement: The temperature in the transformer winding is recorded using a PTC thermistor or NC contacts.

As well as an adjustable response value of 50 ... 500 kΩ, the 7LQ3355 insulation monitor also has an 11-step LED chain for displaying the current insulation resistance of the system. A range of differently colored LEDs indicates the insulation resistance within the range of 20 kΩ … 1 MΩ. This allows insulation deteriorations to be detected even before an alarm is triggered. The device is also equipped with an additional relay for connection of a test and signaling combination. This allows the 7LQ3360 test and signaling combination and the previous and no longer available test and signaling combinations 7XV9306, 7XV9304 and 7XV9302 to be connected to the 7LQ3355 insulation monitor (see also the graphic under "Connection example: 7LQ3355 insulation monitors with 7XV9306 test and signaling combination").

Load current sensing: The 7LQ3358 current transformer detects the load current of a phase. Evaluation is carried out over the 7LQ3354 and 7LQ3355 insulation monitors.

Evaluation: If one of the values is outside the limit values, an alarm is triggered. The LED for the relevant fault lights up and the alarm relay switches. The information is made available over the changeover contacts and can be displayed on the 7LQ3356 and 7LQ3357 test and signaling panels.

Voltage monitoring

In the case of undervoltage, there is no guarantee that medical equipment will continue to function. Because of the risk this presents to patients, e.g. during operations, it is essential that a switchover unit switches to a second power supply in the event of an undervoltage in the preferred power supply.

The voltage relays switch when the voltage falls below 90 % of the rated voltage. The 5TT3411 relays serve to monitor a 1-phase infeed. 3-phase infeeds can be monitored using 5TT3412 relays. These relays also offer asymmetry, reverse voltage and phase failure detection.

TÜV-certified switchover device

The 7LQ3361 and 7LQ3362 switchover devices have been tested and certified by TÜV Rhineland. Switchover devices comply with DIN VDE 0100-710:2002-11 and IEC 60364-7-710:2002-11.



Rhineland TÜV certificate for 7LQ3361 and 7LQ3362 switchover devices

© Siemens AG 2016

Components and control elements in 7LQ3361 and 7LQ3362 switchover devices

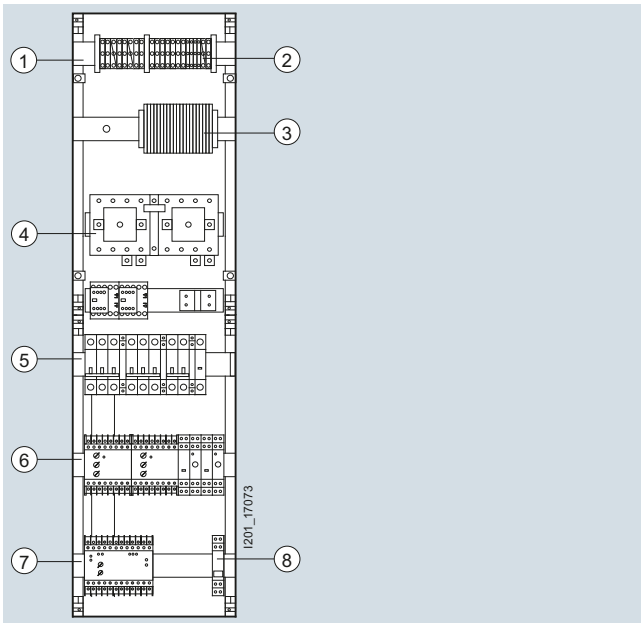

	Meaning
1	Terminal block X1
2	Terminal block X2
3	Terminal block X3
4	Mechanical latching
5	Miniature circuit breakers
6	Voltage relay test pushbuttons
7	Insulation monitors
8	Temperature monitoring test pushbuttons

Control elements for insulation monitors

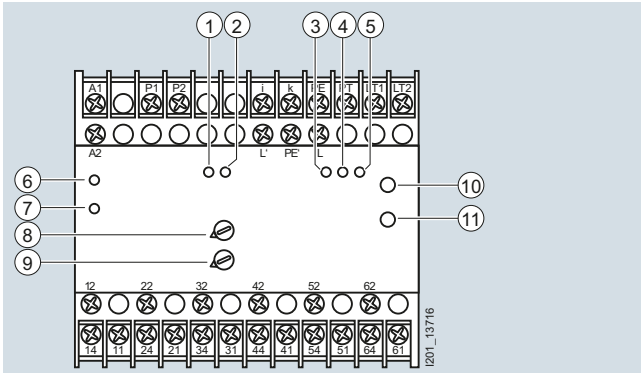

7LQ3354

	LED	Meaning
1	Current monitoring (green)	Lights up if the current is correct (Go state)
2	Current monitoring ">*I*" (red)	Lights up in the case of overcurrent
3	Insulation monitoring "ON" (green)	Lights up when the power supply is switched on (ready-to-run)
4	Insulation monitoring "MK" (red)	Lights up if a line of the measuring circuit is interrupted (L, L', PE, PE')
5	Insulation monitoring "AL" (red)	Lights up in the case of an insulation fault, R_F<R_{an} (value has fallen below the response value)
5a	Insulation monitoring "R_F" (red, yellow, green)	11-step LED chain to display the current resistance
6	Temperature monitoring (green)	Lights up when the power supply is switched on
7	Temperature monitoring (red)	Lights up in the event of overtemperature or an interruption in the sensor circuit

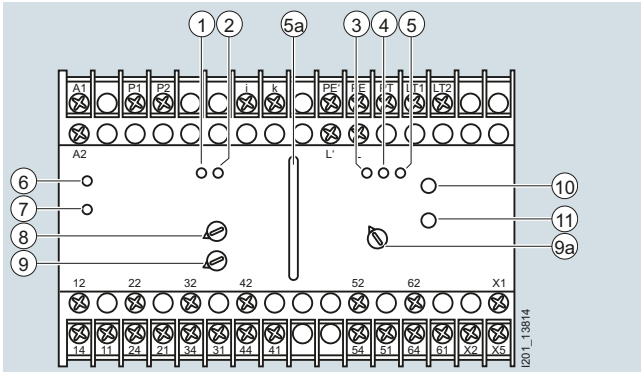

7LQ3355

	Pushbutton/rotary controller	Meaning
8	Rotary controller response value ">*I*"	Setting of the response value for current monitoring
9	Rotary controller delay time	Setting of delay time after which the CO contacts return to their normal position if the current value exceeds the set response value.
9a	Rotary controller response value "R_{an} kΩ"	Setting of the response value for insulation monitoring
10	"TEST" pushbutton	Pressing the "Test" test button simulates an insulation deterioration in the measuring circuit (R_F approx. 40 kΩ), thus checking that the insulation monitor is fully functional
11	"RESET" button	Deletion of fault if fault storage is activated

© Siemens AG 2016

7LQ3 monitors for medical premises

Control elements of the test and signaling panels

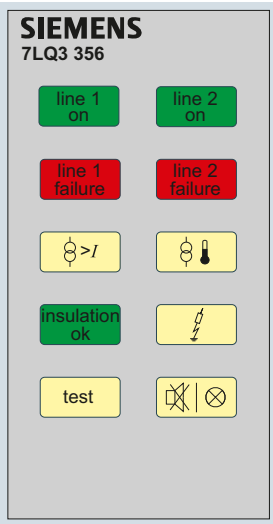

7LQ3356, 7LQ3357

Note:
Customized reporting and signaling panels can be produced, for instance with an integrated intercom, for the switchover and monitoring devices. For more information on this contact your local Siemens representative.

	LED window displays	Meaning
	Line 1 On	Power supply is implemented over the preferred infeed
	Line 2 On + Line 1 Failure	Power supply is implemented over the second line as the preferred infeed has failed
	Line 1 On + Line 2 Failure	Power supply is implemented over the preferred infeed. However the second line is no longer available
	Line 2 On + Line 1 Failure + Line 2 Failure	Power supply is implemented over the second line as the preferred infeed is faulty. There is undervoltage on the second line
	Overload	Excessive power consumption of the IT system
	Overtemperature	The transformer of the IT system is overloaded
	Insulation is good	The transformer of the IT system is overloaded
	Insulation is defective	The insulation resistance of the IT system is too low
	TEST	Pushbutton for testing the insulation monitoring devices
	Acknowledgement pushbutton/lamp test	Pushbutton for acknowledging the acoustic alarm signal/function test of the display elements

Control elements of the test and signaling combination

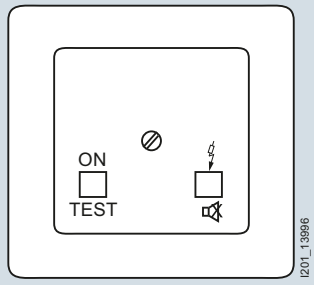

7LQ3360

	LED/pushbutton	Meaning
ON	Green LED	The LED lights up if the power supply is applied
Ground fault	Yellow LED	Insulation fault: The insulation resistance of the IT system is too low
	TEST	Pushbutton for testing the insulation monitoring devices
	Acknowledgement pushbutton	Button for acknowledging the acoustic alarm signal

Control elements of voltage relay

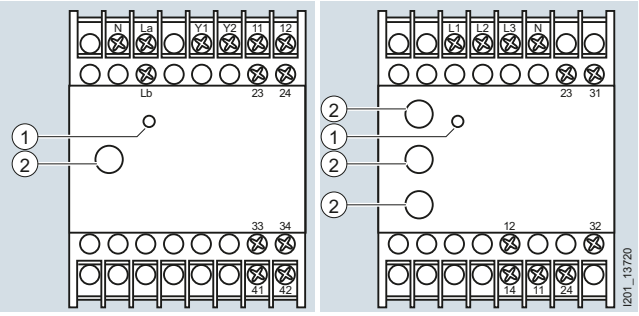

5TT3411 5TT3412

	LED/pushbutton	Meaning
1	5TT3411: Yellow LED 5TT3412: Green LED	The LED lights up if the system is fault-free
2	TEST button	Pressing the test button simulates an undervoltage. The 3-phase 5TT3412 voltage relay has a test button for each phase.

© Siemens AG 2016

Overview

Fault signaling units are used in small plants where the installation of complex fault signaling systems would be too labor-intensive and too expensive. In the event of a fault, they enable fast fault localization of all monitoring devices and limit monitors installed in a plant from a central location. This increases plant availability. With the correct sensor configuration, they also provide the option of preventative maintenance.

- 4 fault signaling inputs with LED
- 1 LED as centralized fault indicator
- One unit each for centralized fault indication and acoustic signaling
- With acknowledgment for acoustic indicators
- Open/closed-circuit principle so the 4 inputs can be adjusted via jumpers X1 - X2
- A maximum of 39 5TT3461 expansion fault signaling units can be connected to the 5TT3460 centralized fault signaling unit
- The maximum possible cable length between 5TT3460 centralized fault signaling units and 5TT3461 expansion fault signaling units is approx. 100 m with a conductor cross-section of 1.5 mm^2

Technical specifications

			5TT3460	5TT3461
Standards			IEC 60255; DIN VDE 0435-110, -303	
Rated operational voltage U_c		V AC	230	
Primary operating range		× U_c	0.8 ... 1.1	
Rated frequency f_n		Hz	50/60	
Fault signaling inputs S1 ... S4		V AC	230	
Signal voltage		V	7 ... 10	
To terminals S and H				
Noise pulse duration		ms	≥ 100	
Acknowledgment pulse duration		ms	≥ 200	
Contacts				
• Rated operational voltage U_e		V AC	230	--
• Rated operational current I_e		A	5	--
• Minimum contact load		V; mA	10; 100	--
Connections				
• Terminals	± Screw (Pozidriv)		PZ 1	
• Conductor cross-sections				
- Rigid, max.		mm^2	2 × 2.5	
- Flexible, with end sleeve, min.		mm^2	1 × 0.5	
Permissible ambient temperature		°C	-20 ... +60	
Humidity class	Acc. to IEC 60068-2-30		F	

Dimensional drawings

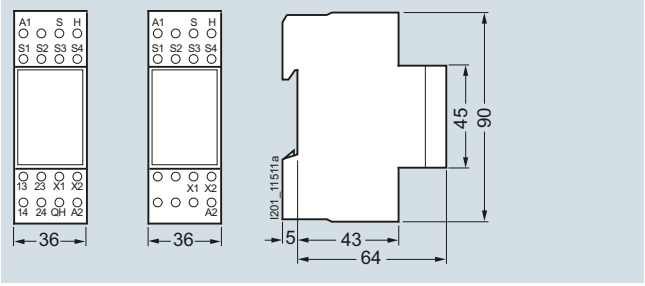

5TT3460 5TT3461

Circuit diagrams

Graphical symbols

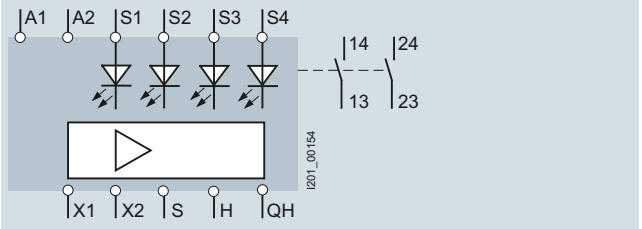

5TT3460

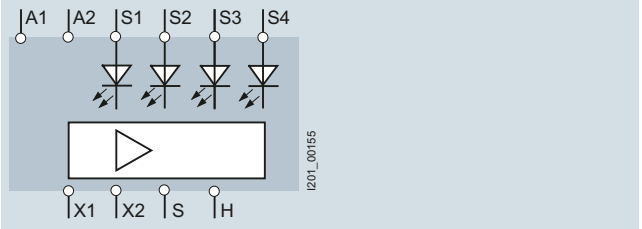

5TT3461

© Siemens AG 2016

Typical circuit, function chart

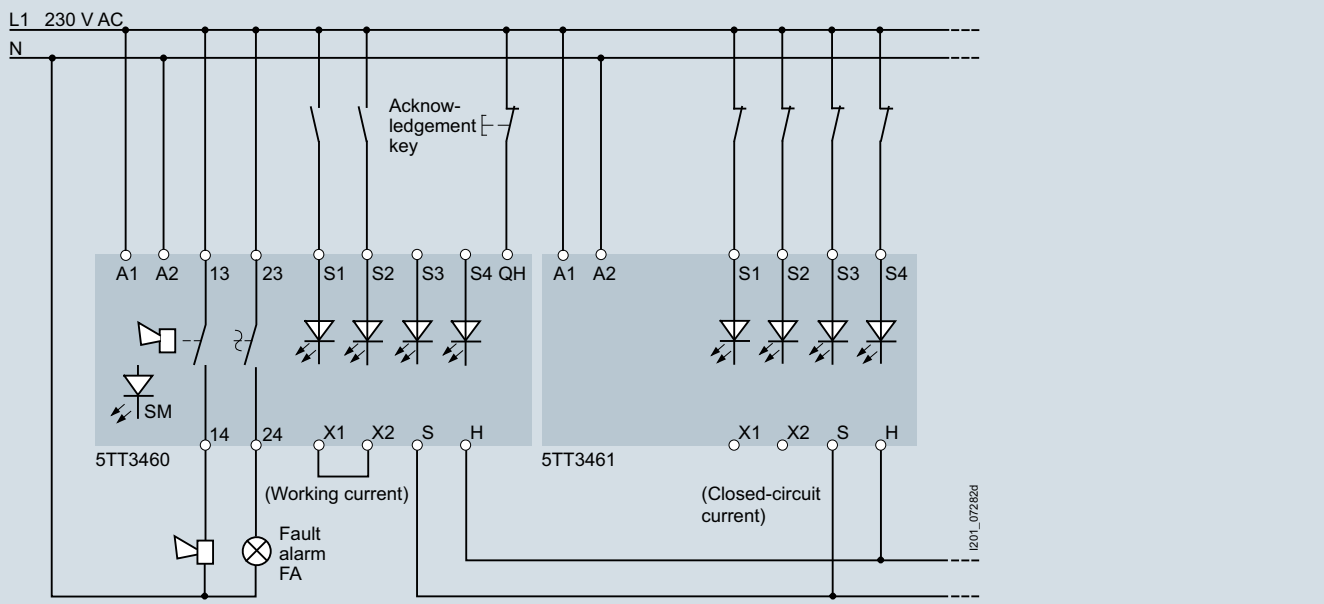

If there is a fault, the SM fault indication contact closes and a centralized fault is indicated over an LED. The assigned LED remains lit until the fault is eliminated. Until the acknowledgment, momentary faults can be identified by the remaining centralized fault.

The terminals A1, S1 to S4 and QH must be operated in-phase. If no external acknowledgment key is connected, terminal QH must be applied to L1.

If jumper X1 – X2 is inserted, open-circuit protection (otherwise closed-circuit protection).

Contacts 13/14 and 23/24 close in the event of an incoming fault. The assigned LED and the SM centralized fault indication LED light up.

The alarm sensor (contact 13/14) is switched off using the acknowledgment key. The assigned LED and the centralized fault indication LED continue to light up and contact 23/24 remains closed until the fault is eliminated.

Cables S and H carry an extra-low voltage. In the case of long connections between different distribution boards a shielded cable must be laid parallel to the installed load lines.

As a light signal sensor for the group messages we recommend devices 5TE57 or 5TE58; as an alarm sensor the devices 5TT3450 to 5TT3453.

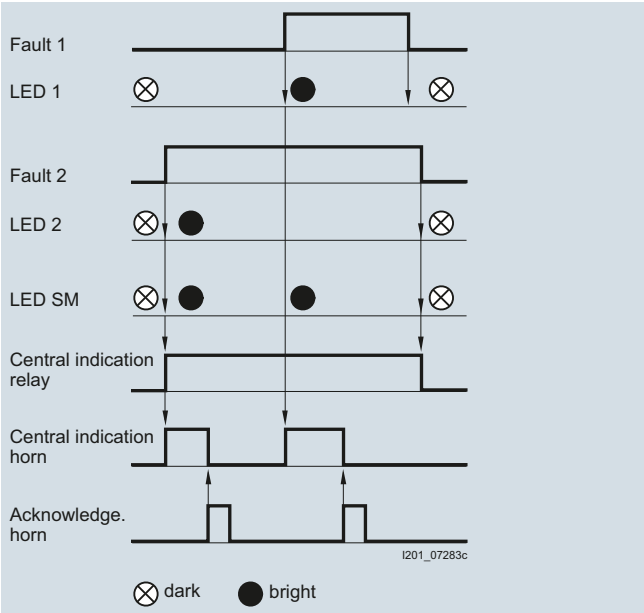

© Siemens AG 2016

Overview

EMERGENCY STOP circuits are common safety measures in all laboratory equipment and industrial plants. The EMERGENCY STOP modules used here must meet the most rigorous demands with regard to functional reliability. Benchmark is the degree of self-monitoring.

Technical specifications

				5TT5200
Standards				IEC 60204-1; EN 60204-1 (VDE 0113-1)
Supply				
• Rated operational voltage U_c			V AC	230
- Primary operating range			× U_c	0.8 ... 1.1
• Rated frequency f_n			Hz	50
• Rated power loss P_v	Coil/drive			3.5
	Contact per pole		VA	0.8
Control voltage	Terminal Y1		V AC/DC	24
Control current	Terminal Y1		mA DC	45
Recovery time			ms	500
Safety				
• Electrical isolation, creepage distances and clearances, actuator/contact			mm	3
• Rated impulse withstand voltage U_{imp} actuator/contact			kV	> 4
Contacts				
• Contacts	NO contacts	AC-15	A	3
	NC contacts	AC-15	A	2
	NO contact/NC contact	AC-1	A	5
• Contact gap			mm	> 1
• Electrical service life	AC-15, 2 A, 230 V AC		Switching cycles	10^5
• Permissible switching frequency			Switching cycles/h	600
Vibration resistance				
Amplitude	Acc. to EN 60068-2-610	Up to 55 Hz	mm	0.35
Connections				
• Terminals	± Screw (Pozidriv)			PZ 1
• Conductor cross-sections of main current paths				
- Rigid	Max.		mm^2	2 × 2.5
- Flexible, with end sleeve	Min.		mm^2	1 × 0.5
Permissible ambient temperature			°C	0 ... +50
Climatic withstand capability	Acc. to EN 60068-1			0/55/04

Dimensional drawings

5TT5200 EMERGENCY STOP module

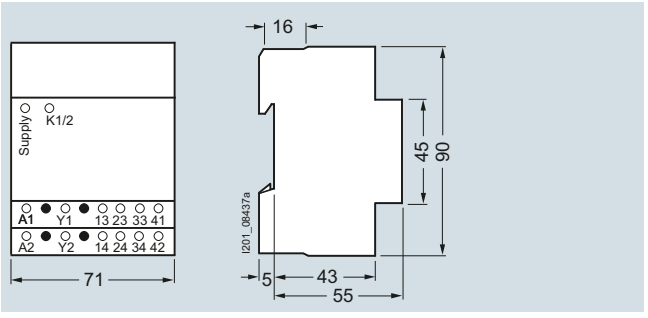

© Siemens AG 2016

Circuit diagrams

Typical circuit diagrams

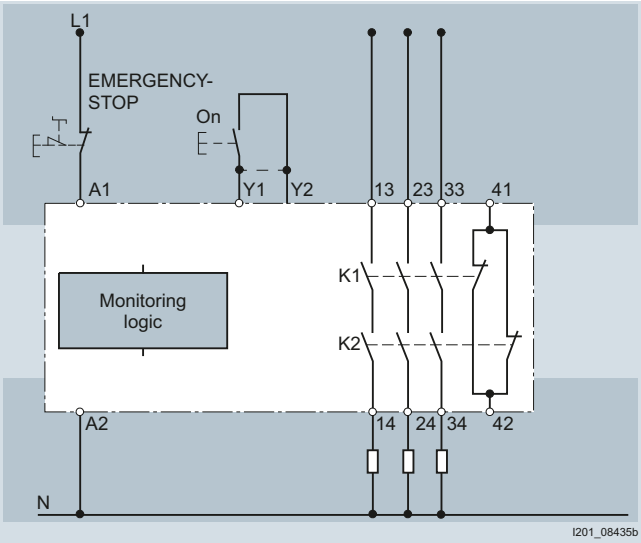

Direct connection 230 V/400 V to 5 A

The monitoring logic checks internal relay contacts (not shown) to see whether both relays have been released prior to switching on. This ensures that no contacts are welded. The voltage level at terminal A1 is also monitored. The parallel NC contacts K1 and K2 (terminals 41 and 42) can be connected as required.

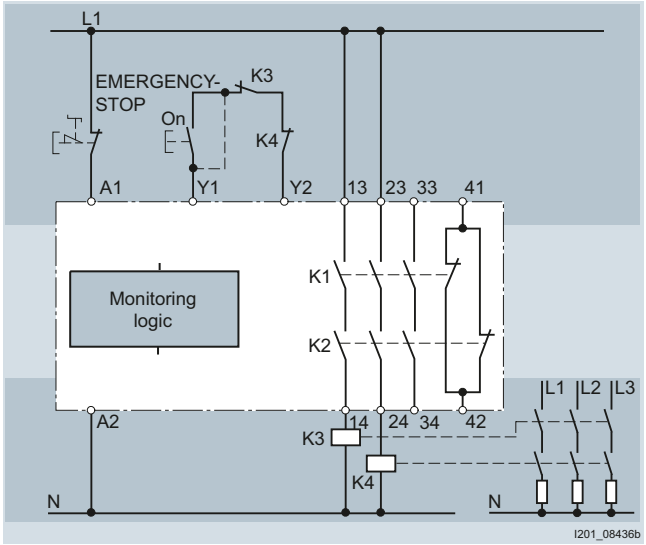

Connection of external contactors

External contactors may be used when they are equipped with positively driven contacts according to safety regulations ZH1/457 of the German Trade Association. Contactors with 3 NO contacts and 1 NC contact must be used, in which case the NC contacts must be integrated in the monitoring loop – terminals Y1/Y2. The parallel NC contacts K1 and K2 (terminals 41 and 42) can be connected as required.

© Siemens AG 2016

Overview

Level relays are used for the monitoring and control of conductive, non-combustible liquids and powders. They ensure overflow and dry run protection. Due to their sensor performance, the devices can also be used for general resistance monitoring.

LED displays:
- Green LED: lights up when operational voltage is applied
- Yellow LED: lights up if MIN output relay is activated
- Red LED: lights up if MAX output relay is activated

Technical specifications

			5TT3435
Standards			IEC 60255; DIN VDE 0435-110
Supply			
• Rated operational voltage U_c		V AC	230
- Primary operating range		× U_c	0.8 ... 1.1
• Rated frequency f_n		Hz	50/60
Setting range of the liquid level		kΩ	2 ... 450
Switching point hysteresis of set value			
• At 450 kΩ		%	3
• At 2 kΩ		%	6
Voltage temperature influence	From set value	%	< 2
Max. cable length to the electrodes at 100 µF/km	Setting kΩ		
	450	m	50
	100	m	200
	35	m	500
	10	m	1500
	5	m	3000
Electrode voltage	Max.	V AC	Approx. 10
Electrode current	Max.	mA AC	Approx. 1.5
Response delay	Adjustable	s	0.2 ... 20
OFF-delay	Adjustable	s	0.2 ... 20
Rated operational voltage U_e		V	250
Rated operational current I_e		A	5
Test voltage			
	Input/auxiliary circuit	kV	4
	Input/output circuit	kV	4
	Auxiliary/output circuit	kV	4
Connections			
• Terminals	± Screw (Pozidriv)		PZ 2
• Conductor cross-sections			
- Rigid	Max.	mm^2	2 × 2.5
- Flexible, with end sleeve	Min.	mm^2	1 × 0.5
Permissible ambient temperature		°C	-20 ... +60
Climatic withstand capability	Acc. to EN 60068-1		20/60/4

Dimensional drawings

5TT3435 level relays

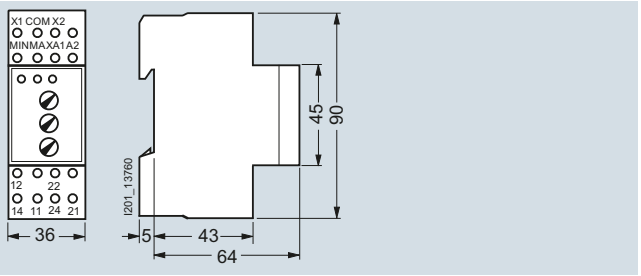

5TT3435

5TG8223 immersion electrodes

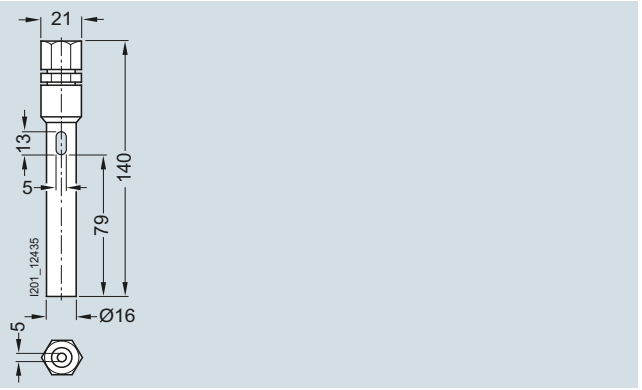

5TG8223

© Siemens AG 2016

Circuit diagrams

Graphical symbols

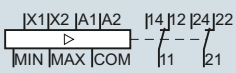

Typical circuit for 5TT3435

One-step level control

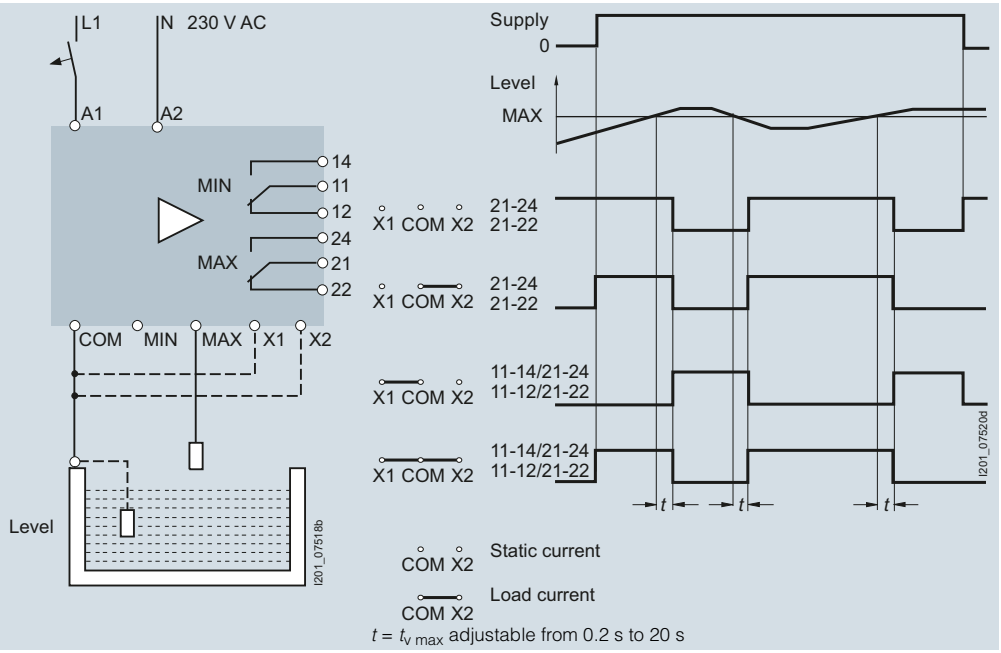

The one-step level control is particularly suitable for dry run or overrun protection with free inflow/outflow.

The COM reference electrode and MAX electrode are needed.

Without the jumper X1-COM only relay 21-22-24 switches.

With the jumper X1-COM both relays switch together.

Two-step level control

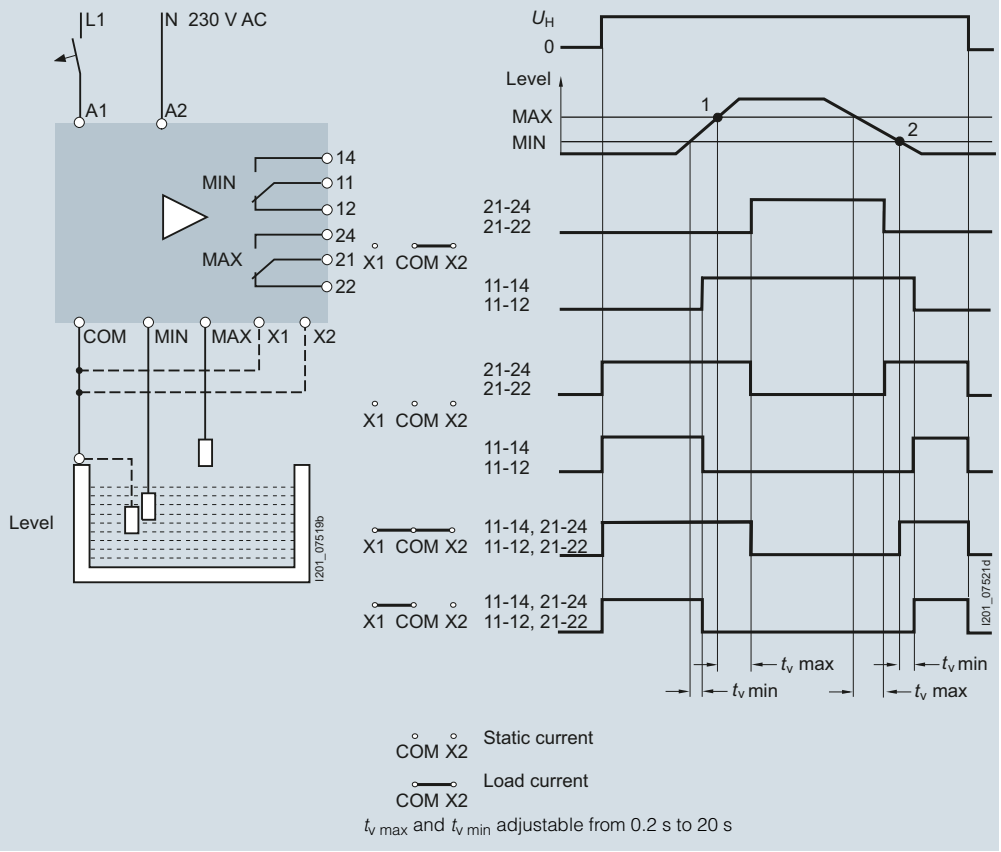

The 2-step level control keeps the liquid level between a minimum and a maximum level. Three electrodes are required: MIN, MAX and COM.

Without the jumper X1-COM, switching is as follows:

- If the MAX level is fallen below/exceeded, only relay 21–22–24 switches.
- If the MIN level is fallen below/exceeded, only relay 11–12–14 switches.

With the jumper X1–COM, both relays switch together if the value exceeds the MAX level or falls below the MIN level.

© Siemens AG 2016

Overview

Line circuit relays are used to interrupt circuits and prevent electromagnetic fields in circuits where there are currently no active loads.
If the loads are disconnected, and the line circuit relay measures a usage of only 2 to 20 VA – adjustable – it disconnects the cable to the supply voltage and switches over to extra-low voltage. As soon as loads are reconnected, the line circuit relay detects the increase in usage and switches back to the supply voltage.
While the line circuit relay switches off any unnecessary system components, it is not a device for ensuring isolation in the sense of safe disconnection.

The line circuit relay is unable to detect consumers with electronic power supply units, e.g. electronically controlled vacuum cleaners. It is expedient to connect such devices to a base load resistor (PTC resistor) so that the line circuit relay is reset to supply voltage.

Technical specifications

			5TT3171
Standards			IEC 60255; DIN VDE 0435-110
Rated operational voltage U_c		V AC	230
Primary operating range		× U_c	0.85 ... 1.15
Rated frequency		Hz	50/60
Rated power loss P_v	Electronics Contacts	VA VA	5 2.6
Monitoring voltage		V	3
Response value	Adjustable	VA	2 ... 20
Release value	% of the response value		70
Rated impulse withstand voltage U_{imp}	Input/output	kV	> 4
Rated operational voltage U_e		V AC	250
Rated operational current I_e	AC-1 AC-11	A A	16 3
Contacts			μ contact
Electrical service life	In switching cycles at 3 A	AC-11	5×10^5
Terminals	± Screw (Pozidriv)		PZ 1
Conductor cross-sections			
• Rigid • Flexible, with end sleeve	Max. Min.	mm^2 mm^2	2 × 2.5 1 × 0.5
Permissible ambient temperature		°C	-20 ... +45
Degree of protection	Acc. to IEC/EN 60529		IP20, with connected conductors
Safety class	Acc. to EN 61140/VDE 0140-1		II
Humidity class	Acc. to IEC 60068-2-30		F

Dimensional drawings

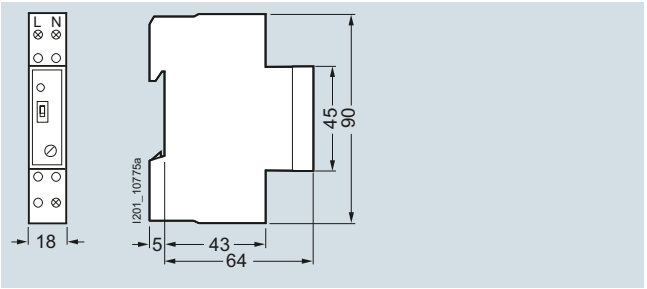

5TT3171

Circuit diagrams

Typical circuit diagram

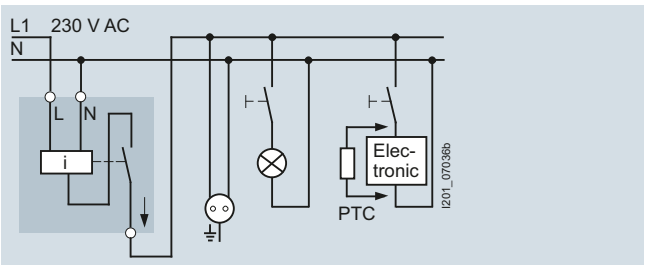

If the line circuit relay does not respond to a load, it must be connected with a 5TG8222 base load resistor. Devices in active standby operation may impair the function of the line circuit relay.

© Siemens AG 2016

5TT3 p.f. monitors

Overview

The p.f. monitor monitors the phase displacement between current and voltage. Because the phase displacement angle changes with the load of the motor, this measurement method is ideal for the monitoring of asynchronous motors for underload and no-load operation, independent of size. However, in some cases, the p.f. barely changes if the load of the motor changes, e.g. in the case of relatively minor load changes on large-scale motors or single-phase split-pole motors or collector motors.

The p.f. monitor monitors single and three-phase asynchronous motors up to approx. 5 A (without current transformer) for underload and no-load operation, thus increasing plant availability. Typical applications are fan monitoring in the case of V-belt breakage, pump monitoring in the event of valve closure or dry runs. A current transformer is used for higher rated currents.

If the lower p.f. value set at the p.f. monitor is violated for the duration of the set response delay, the output relay switches to the alarm state and the red LED lights up. If the higher p.f. value is violated, the output relay switches back without any significant delay.

- Adjustable p.f. response value, from 0 to 0.97
- Current range up to 8 A
- LED display for operation and alarm
- Automatic resetting of alarm

Technical specifications

			5TT3472
Standards			IEC/EN 60255, VDE 0435
Rated operational voltage U_c		3 V AC	400
Primary operating range	With AC supply	× U_c	0.8 ... 1.1
Frequency range f_n		Hz	45 ... 65
Rated power loss P_v		VA	Approx. 11
Rated impulse withstand voltage U_{imp}	Against contacts	kV	< 4
Current measuring circuits			For AC systems
Current measuring range I_{meas}		A AC	0.4 ... 8
Short-time load carrying capacity	For 2 s For 0.5 s	A A	20 40
Current transformer, class 3 or better	Secondary current	A	1 or 5
Setting range	Adjustable	p.f.	0 ... 0.97
Response delay	Adjustable	s	1 ... 100
Short-circuit strength	Fuse 4 A gL	A	4
Contacts	µ contact		1 CO
• Rated operational voltage U_e		V AC	250
• Rated operational current I_e	Thermal current AC-15 NO contacts AC-15 NC contacts AC-13 at 24 V DC	A A A A	4 3 1 1
• Minimum contact load		V; mA	10; 100
Connections			
• Terminals	± Screw (Pozidriv)		PZ 2
• Conductor cross-sections - Rigid - Flexible, with end sleeve	 Max. Min.	 mm^2 mm^2	 2 × 2.5 1 × 0.5
Permissible ambient temperature		°C	-20 ... +60
Resistance to climate	Acc. to EN 60068-1		20/60/4
Degree of protection	Acc. to EN 60529		IP20, with connected conductors

Dimensional drawings

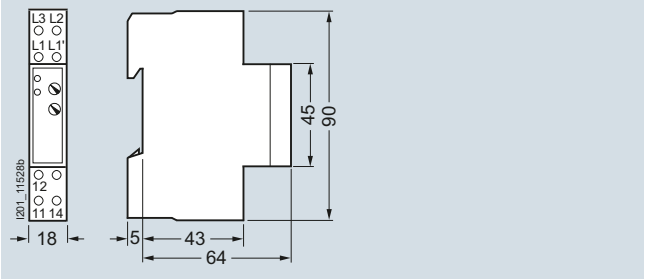

5TT3472

© Siemens AG 2016

Circuit diagrams

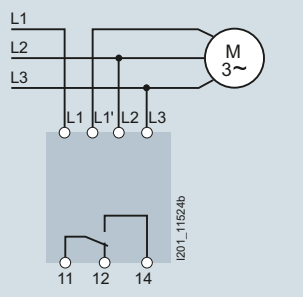

Connection of three-phase load

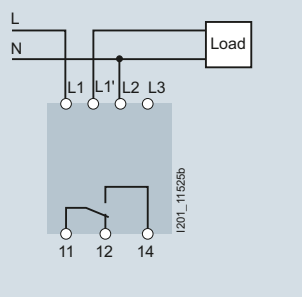

Connection of single-phase load

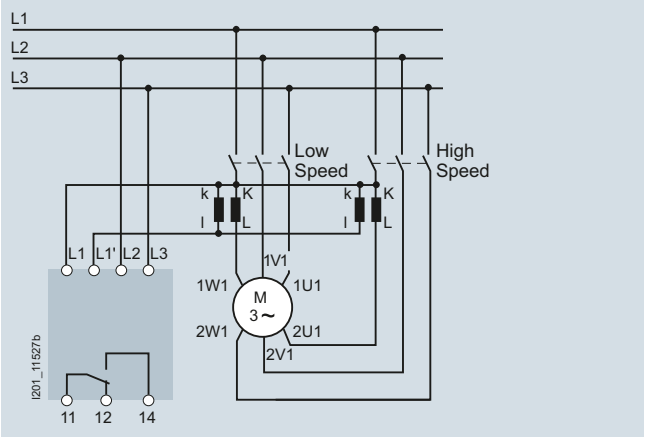

Connection of motors with separate windings

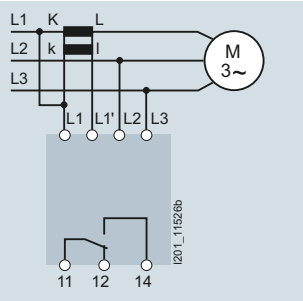

Connection of three-phase load with external current transformer, whereby the winding direction of the current transformer must be taken into account.

More information

Function charts

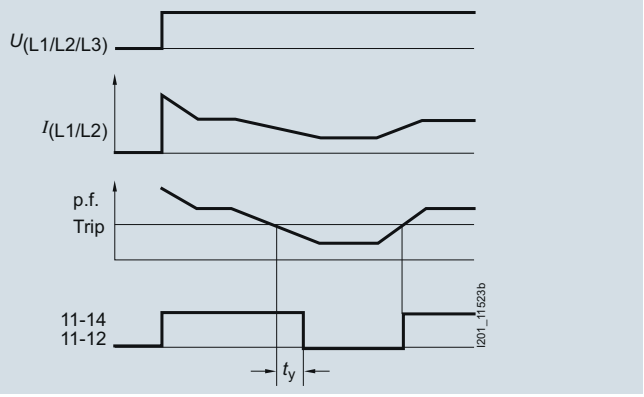

If the lower p.f. value set at the p.f. monitor is violated for the duration of the set response delay, the output relay switches to the alarm state and the red LED lights up. Contact 11–14 closes and the red LED lights up.

Front view

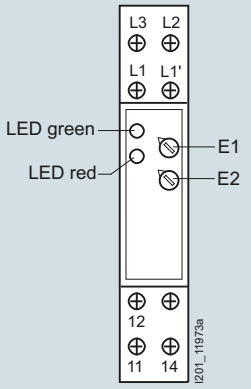

LED green: Status display (U)
LED red: Underloading indicator (p.f. alarm)
E1: Response value
E2: Response delay ty

© Siemens AG 2016

Overview

Thermistor motor protection relays monitor the thermistors wound in motors. This helps to prevent thermal motor overloads, e.g. due to high switching frequency, single-phasing, disabled cooling or excessive ambient temperatures. Up to 6 thermistors in series can be monitored. A conductor break in the sensor conductor will immediately trip the device. The device can also be used for monitoring wound quick-break switches – e.g. bimetal thermostats. This offers all-round motor protection.

- For the detection of
  - Violation of upper temperature limits
  - Wire breaks in sensor circuits
- 1 input for 1 to 6 thermistors
- With 2 LEDs green/red for ready-to-run and fault
- Response value: 3.2 to 3.8 kΩ
- Release value: 1.5 to 1.8 kΩ
- The max. cable length of the sensor supply cable NYM 2 × 1.5 is 100 m
- Remote Reset: over A1/A2 (NC contact) or over X1/X2 (NO contact)

LED displays:

- Green LED: Lights up when operational voltage is applied
- Red LED: Lights up in the event of overtemperatures or an interruption in the sensor circuit

Technical specifications

			5TT3431 **5TT3432**
Standards			IEC 60255; DIN VDE 0435-110
Rated operational voltage U_c		V AC	230
Primary operating range		× U_c	0.9 ... 1.1
Rated frequency		Hz	50/60
Response value		kΩ	3.2 ... 3.8
Release value		kΩ	1.5 ... 1.8
Minimum contact load		V; mA	10; 100
Rated insulation voltage U_i	Between coil/contact	kV	4
Rated impulse withstand voltage U_{imp}	Actuator/contact	kV	> 2.5
Contacts	μ contact (AC-11)	A	3
• Rated operational voltage U_e		V AC	230
• Rated operational current I_e		A	5
	Actuator/contact	mm	4
Connections			
• Terminals	± Screw (Pozidriv)		PZ 1
• Conductor cross-sections			
- Rigid	Max.	mm^2	2 x 2.5
- Flexible, with end sleeve	Min.	mm^2	1 x 0.5
Permissible ambient temperature		°C	-20 ... +60
Climatic withstand capability	Acc. to EN 60068-1		20/60/4

Dimensional drawings

5TT343 motor protection relays

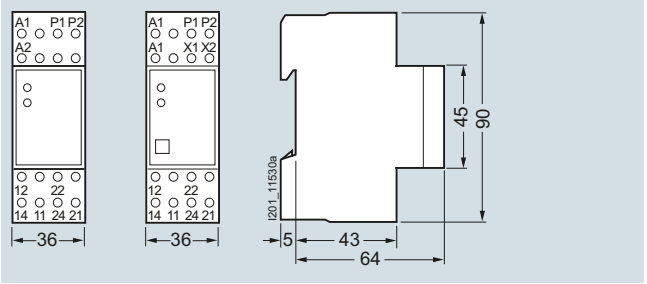

5TT3431 5TT3432

© Siemens AG 2016

Circuit diagrams

Graphical symbols

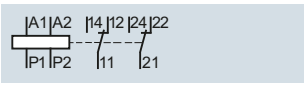

5TT3431

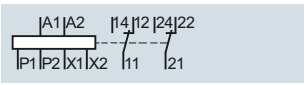

5TT3432

Typical circuit for 5TT3431, 5TT3432

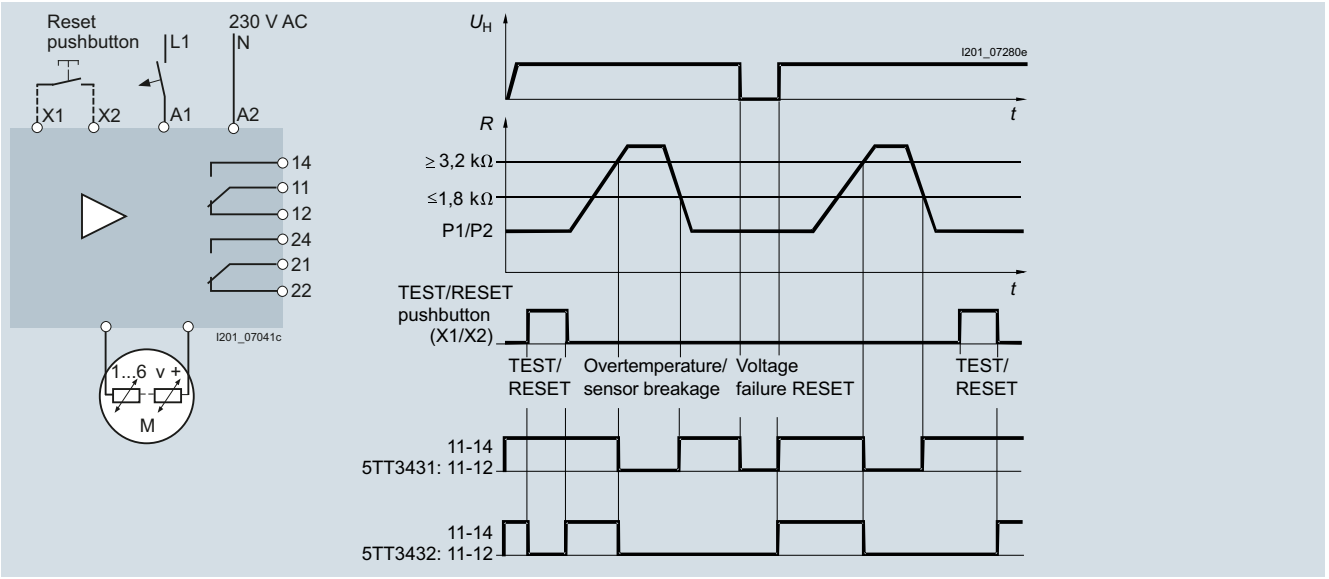

If one of the thermistors (possible for up to 6) reaches the response temperature, the device switches.

5TT3431 (without terminals X1/X2 and without RESET button) switches back on after cooling and after the value falls below that permanently set for the hysteresis. To switch on before this time, briefly disconnect the power supply.

5TT3432 stores the fault and remains switched off until the RESET button is pressed.

© Siemens AG 2016

Notes

© Siemens AG 2016

© Siemens AG 2016

Siemens AG
Energy Management
Low Voltage & Products
Postfach 10 09 53
93009 REGENSBURG
GERMANY

Subject to change without prior notice
PDF (3ZW1012-5SV80-0AC1)
PH 0216 64 En
Produced in Germany
© Siemens AG 2016

The information provided in this brochure contains merely general descriptions or characteristics of performance which in case of actual use do not always apply as described or which may change as a result of further development of the products. An obligation to provide the respective characteristics shall only exist if expressly agreed in the terms of contract. Availability and technical specifications are subject to change without notice.
All product designations may be trademarks or product names of Siemens AG or supplier companies whose use by third parties for their own purposes could violate the rights of the owners.

www.siemens.com/lowvoltage