SIEMENS

Data sheet 3VL9120-4TC31

accessory for VL150XUL, (CG frame) box terminals comprises 3 box terminals 3-pole

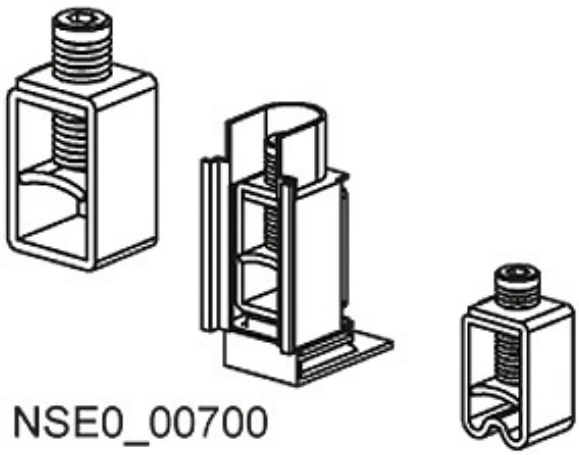

Model	
Product brand name	SENTRON
Accessories	
accessories	Accessories for VL150X
Mechanical Design	
Net weight	0.1 kg
Certificates	

Subject to change without notice
© Copyright Siemens

General Product Approval		EMC	Declaration of Conformity	Test Certificates	Shipping Approval
Miscellaneous	UL	C-Tick	EG-Konf.	Special Test Certificate	PRS

Shipping Approval		other			
RINA	RMRS	Confirmation	Miscellaneous	Environmental Confirmations	Manufacturer Declaration

Further information

Information- and Downloadcenter (Catalogs, Brochures,…)
http://www.siemens.com/lowvoltage/catalogs

Industry Mall (Online ordering system)
https://mall.industry.siemens.com/mall/en/en/Catalog/product?mlfb=3VL9120-4TC31

Service&Support (Manuals, Certificates, Characteristics, FAQs,...)
https://support.industry.siemens.com/cs/ww/en/ps/3VL9120-4TC31

Image database (product images, 2D dimension drawings, 3D models, device circuit diagrams, ...)
http://www.automation.siemens.com/bilddb/cax_en.aspx?mlfb=3VL9120-4TC31

CAx-Online-Generator
http://www.siemens.com/cax

Tender specifications
http://www.siemens.com/specifications

Subject to change without notice
© Copyright Siemens