SIEMENS

Ingenuity for life

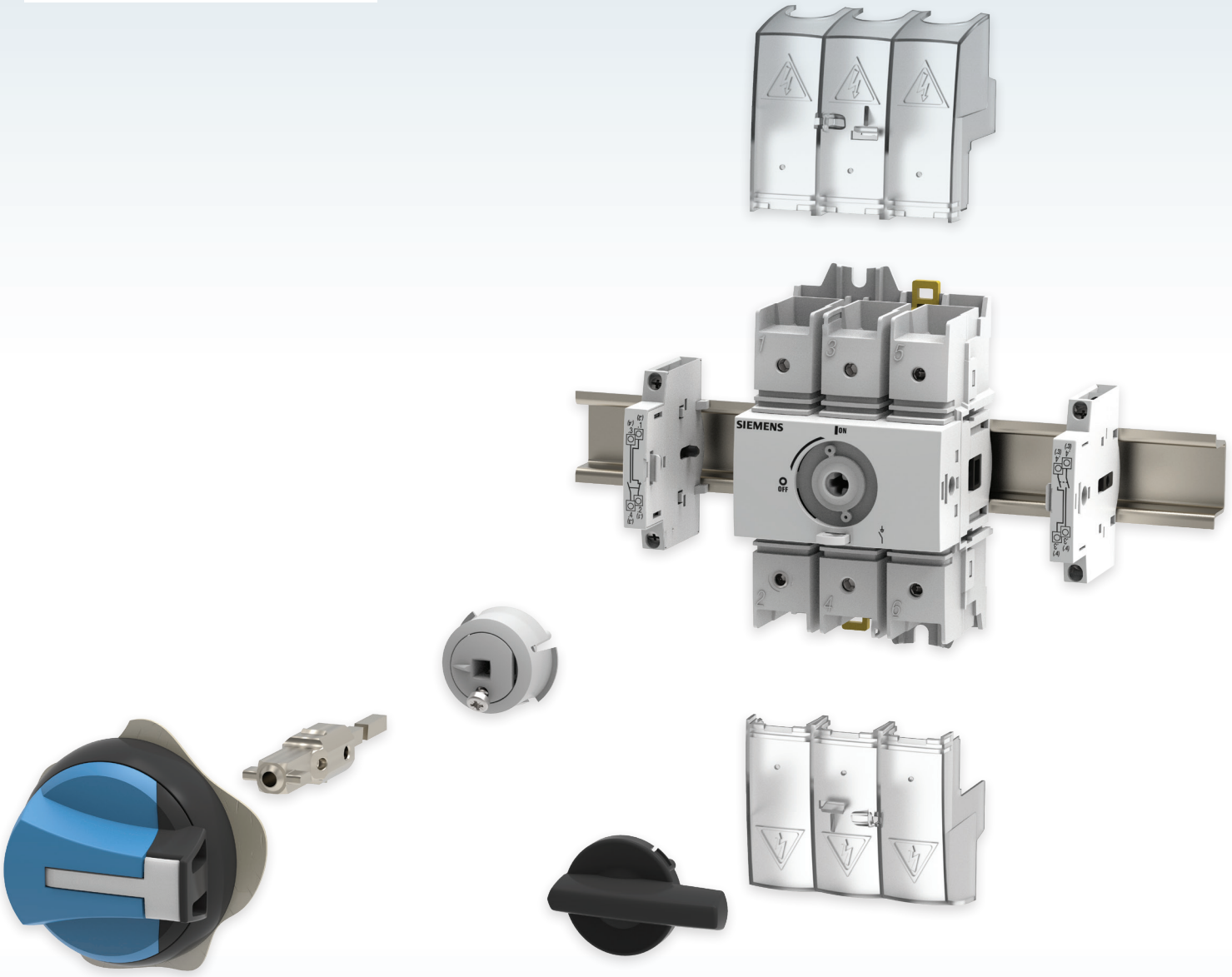

Disconnect Switches Product Guide

Compact Fusible Switch (CFS) and Compact Non-Fusible Switch (CNFS)

usa.siemens.com/switches

Table of Contents
Disconnect Switches
Product Guide

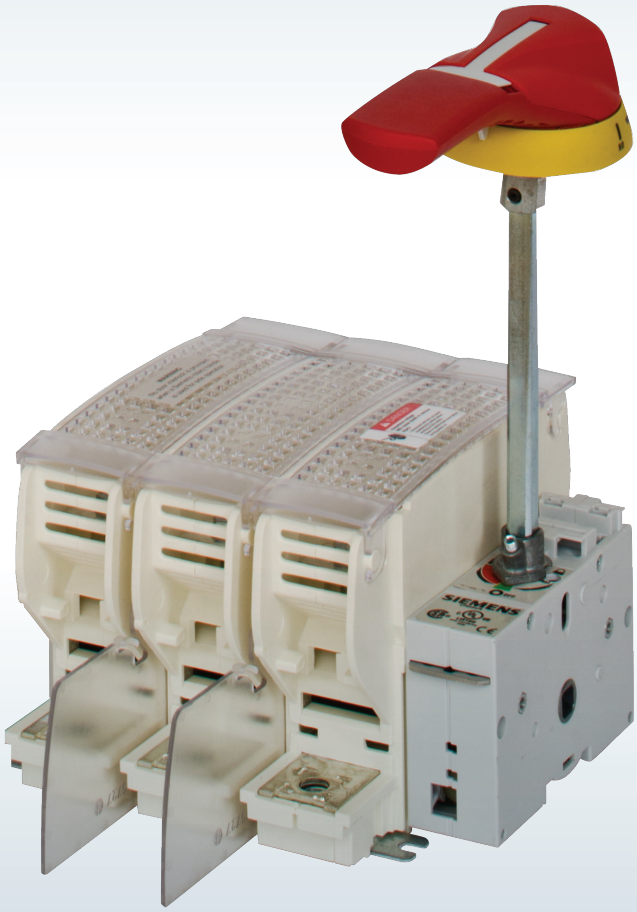

Description		Page
General information - Type CFS Compact Fusible Switches - Type CNFS Compact Non-Fusible Switches		 4 17
Catalog numbering system - Type CFS Compact Fusible Switches - Type CNFS Compact Non-Fusible Switches		 4 17
Features - Type CFS Compact Fusible Switches - Type CNFS Compact Non-Fusible Switches		 5 18
Ordering information - Type CFS Compact Fusible Switches - Type CNFS Compact Non-Fusible Switches		 5 18
Switch, shaft and handle selection - Type CFS Compact Fusible Switches - Type CNFS Compact Non-Fusible Switches		 6 19
Selection and accessories - Type CFS Compact Fusible Switches - Type CNFS Compact Non-Fusible Switches		 7 20
Dimensions and technical characteristics - Type CFS Compact Fusible Switches - Type CNFS Compact Non-Fusible Switches		 8 21
Dimensions	30A, 65kA & 100kA switches - Type CFS Compact Fusible Switches - Type CNFS Compact Non-Fusible Switches	 9 22
	30-200A, 100kA & 200kA switches - Type CFS Compact Fusible Switches - Type CNFS Compact Non-Fusible Switches	 10-12 23
	400A, 200kA switch - Type CFS Compact Fusible Switches - Type CNFS Compact Non-Fusible Switches	 13-14 24
	600A & 800A, 200kA switches - Type CFS Compact Fusible Switches - Type CNFS Compact Non-Fusible Switches	 15 25-26
	Handles and door drillings - Type CFS Compact Fusible Switches - Type CNFS Compact Non-Fusible Switches	 16 27

General Information

Type CFS Switches, Shafts and Handles

Description

Siemens Type CFS compact fusible switches meet UL 98 requirements and can be used in either service entrance or branch circuit applications. 30-800A, 3 pole switches are offered and are all rated 600V AC maximum. 30A switches are available with provisions for either Class CC or J fuses. 60A and larger switches provided with Class J fuse provisions can be used in non-fusible applications with field installable no-fuse kits.

All are open style, designed to be panel mounted and are UL listed under file number #E121152 or #E68312 and CSA certified under file number #222227. A variety of door mounted rotary operators are available with Type 1, 3R, 12 or 4/4X ratings.

NFPA79 Kits

CFSNFPA1 AND CFSNFPA2N kits provide an internal handle and padlocking means to comply with article 5.3.4.2 of the NFPA-2002 standard.



Catalog Numbering System

CFS Switches
Compact Fusible Switch

CFS	3	6	1	J	5	N

- Number of poles 3 = 3
- Max. Voltage Rating 6 = 600V
- Ampere rating
  - 1 = 30A
  - 2 = 60A
  - 3 = 100A
  - 4 = 200A
  - 5 = 400A
  - 6 = 600A
  - 7 = 800A
- Fuse provisions type
  - C = Class CC
  - J = Class J with right hand mechanism
  - JL = Class J with left hand mechanism
  - L = Class L with right hand mechanism
- Max. AIC rating
  - 5 = 100kA
  - Omit = 200kA J fused
- Version
  - N = New size reduced version
  - N1 = New 100kA 60A switch

Operating Handles
CFS type handle

CFSH	10	R	12	N

- Shaft cross section
  - 5 = 5 mm
  - 10 = 10 mm
  - 12 = 12 mm
- Handle color and length
  - B = Black & blue, short
  - R = Red & yellow, short
  - BL = Black & blue, long
  - RL = Red & yellow, long
- NEMA type
  - 12 = 1, 3R and 12
  - 4 = 1, 3R, 12 and 4/4X
- Version
  - N = New version

CFS Operating Shafts
CFS type shaft

CFSS	10	200	H	N

- Shaft cross section
  - 5 = 5 mm
  - 10 = 10 mm
  - 12 = 12 mm
- Shaft length
  - 200 = 200 mm
  - 400 = 400 mm
- Switch compatibility
  - Omit = 30A, 100kA
  - H = 100 or 200 kA
- Version
  - N = New version

Type CFS Compact Fusible Switches

Features and Ordering Information

Features

- 30 - 800A ratings
- UL Listed under file #E121152
  & CSA Certified under file #222227
- Door mounted rotary handles with defeatable cover interlock
- Meets UL requirements for both main and branch circuit applications
- Compact size
- 100kA with Class CC fuses or up to 200kA with Class J fuses
- Load break and horsepower rated
- Quick make and break operation
- All handles are padlockable with up to (3) padlocks with 5/16" hasps in the OFF position
- Catalog numbers **CFS361C5** & **CFS361J5** can be DIN-rail mounted and can be either front or side operated with standard rotary handles..
- All CFS part numbers ending in N can be either front or side operated with standard rotary handles.
- Handles are available in Type 1, 3R, 4/4X & 12 ratings
- NFPA 79 field installed kits are available
- 30-400A, 200kA switches are provided with quick connect terminal provisions for voltage sensing or for 10A max. control circuits

Switch	Shaft	Handle	Lugs/Accessories
			
CFS363JN with (2) **CFSAUX1NO**	**CFSS10200HN**	**CFSH10BL12N**	**CFSL200**

Ordering information

1. Select the panel mounted switch required based on Ampere, HP and AIC requirements. Switches with a right hand mechanism are standard, 30-100A switches with a left hand mechanism are available.
2. Select handle based on environmental rating required.
3. Select operating shaft (200 or 400mm in length). For enclosure depths of 9.0" or less from panel mounting surface to inside of door use 200mm long shafts. For deeper enclosures use 400mm long shafts. 30A 100kA switches can be used in 10" deep enclosures (panel to inside of door) with 200mm shaft and CFSH5N handles.

Note: Be sure to check shaft and handle compatibility with the switch selected by using information provided in the selection tables.

4. Line & load lugs are provided as standard on 30-100A switches. Terminal kits are available for 200-800A switches if needed.
5. Auxiliary contact are available if needed as follows. 30A switch CFS361J5 will accept up to (2) aux contacts without an aux contact holder. If more than (2) aux contacts are required order aux contacts PLUS aux contact holder kit CFSAUXH1. All other switches will accept up to (4) aux contacts.
6. 30-100A switches are designed to prevent inadvertent contact with live parts and shields are not required. 200 & 400A switches are not supplied with terminal shields. They are available as field installed kits for both line and load terminals. 400-800A switches are supplied as standard with line shields and terminal shroud kits are available for the load side.

Shaft and Handle Selection

Type CFS Compact Fusible Switches

Fusible switches, 3-pole 600V AC Max. 30-100A & 600-800A switches are also rated 250V DC Max when poles are field connected in series⑤

Switch Ampere Rating	Catalog Number	Fuse Provisions Provided	Max Horsepower Ratings 240V 3Ø AC	480V 3Ø AC	600V 3Ø AC	250V DC	AC Short Circuit Rating
Standard – With Right Hand Mounted Mechanism							
30①	**CFS361C5**	Class CC	7.5	15	20	5③	100kA
30①	**CFS361J5**	Class J	7.5	15	20	5③	100kA
30①	**CFS361JN**	Class J	7.5	15	20	5③	200kA
60①	**CFS362JN1**	Class J	15	30	50	10③	100kA
60①	**CFS362JN**		15	30	50	10③	
100①	**CFS363JN**		30	60	75	20③	
200②	**CFS364JN**④	Class J	60	125	150	–	200kA
400②	**CFS365JN**④		125	250	350	–	
600②	**CFS366J**⑧⑨		200	400	500	–	
800②	**CFS367L**⑧⑨	Class L	200	400	500	–	200kA
Optional – With Left Hand Mounted Mechanism④							
30①	**CFS361JLN**		7.5	15	20	5③	
60①	**CFS362JLN**	Class J	15	30	50	10③	200kA
100①	**CFS363JLN**		30	60	75	20③	

Operating Shafts for 30-400A Switches ⑤

Catalog number	Shaft length in. (mm)	Switch & handle compatibility
CFSS5200N	7.9 (200)	5mm x 5mm for use with CFS361C5 & CFS361J5 switches & with "CFSH5" handles only
CFSS5400N	15.7 (400)	
CFSS5200HN	7.9 (200)	5mm x 5mm for use with all "CFSH10" handles & with CFS361C5 & CFS361J5 switches only
CFSS5400HN	15.7 (400)	
CFSS10200HN	7.9 (200)	10mm x 10mm for use with all "CFSH10" handles & with all 30-400A switches except CFS361C5 & CFS361J5
CFSS10400HN	15.7 (400)	

Compact rotary operating handles - door mounted (for use with CFS361C5 & CFS361J5 switches only) ⑥

Catalog number	Color	UL Type	Operating shaft compatibility
CFSH5B12N **CFSH5R12N**	Blue & Black Yellow & Red	1, 3R & 12	CFSS5200N or CFSS5400N
CFSH5B4N **CFSH5R4N**	Blue & Black Yellow & Red	1, 3R, 12 & 4/4X	

Rotary Operating Handles - Door Mounted (for use with CFSS5200HN, CFSS5400HN, CFSS10200HN & CFSS10400HN)

Catalog number	Color	Description
Type 1, 3R & 12⑦		
CFSH10B12N	Blue & Black	Heavy duty pistol grip (2.75" long for use with 30A switches & CFS362JN1)
CFSH10R12N	Yellow & Red	
CFSH10BL12N	Blue & Black	Heavy duty pistol grip (4.92" long for 30-400A switches)
CFSH10RL12N	Yellow & Red	
Type 1, 3R, 4/4X & 12⑦		
CFSH10B4N	Blue & Black	Heavy duty pistol grip (2.75" long for use with 30A switches & CFS362JN1)
CFSH10R4N	Yellow & Red	
CFSH10BL4N	Blue & Black	Heavy duty pistol grip (4.92" long for 30-400A switches)
CFSH10RL4N	Yellow & Red	



CFS361J5



CFSS5400N



CFSH5B12N

① Line and load lugs included.
② Line and load lugs are not included. Order from table on next page if required.
③ DC HP rating shown requires (3) poles to be connected in series.
④ **CFS364JN** & **CFS365JN** can be rotated 180° for left hand operation as standard.
⑤ Catalog numbers **CFS361C5** & **CFS361J5** accept 5mm x 5mm operating shafts. All other 30-400A switches accept 10mm x 10mm operating shafts.
⑥ Compact pistol grip design (2.75" long) with defeatable cover interlock. Cover can be opened when handle is padlocked in the OFF position.
⑦ Defeatable cover interlock provided. Cover cannot be opened when handle is padlocked in the OFF position.
⑧ 4 pole 600 & 800A switches, **CFS466J** & **CFS467L** are also available.
⑨ **CFS366J** and **CFS367L** are rated 250 & 600V DC when (2) poles are connected in series.

Selection and Accessories

Type CFS Compact Fusible Switches

600 & 800A Rotary Operating Handles - Door Mounted (8.27" long)⑦

Catalog number	Color	UL Type
CFSH12BL12	Blue & Black	1, 3R & 12
CFSH12RL12	Yellow & Red	1, 3R & 12
CFSH12BL4	Blue & Black	1, 3R, 12 & 4/4X
CFSH12RL4	Yellow & Red	1, 3R, 12 & 4/4X

600 & 800A Operating Shafts (Cross Section 12mm x 12mm)

Catalog number	Shaft length in. (mm)	Enclosure depth (switch mounting surface to door OD)
CFSS12200H	12.59 (320)	10.43 – 16.68 in.
CFSS12400H	15.75 (400)	10.43 – 19.84 in.

Type CFS Fusible Switch Accessories

Catalog number	Description
Terminals①	
CFSL200	200A lug kit (6 lugs per kit) (1)#6-3/0
CFSL400N	400A lug kit (6 lugs per kit) (1)#2-600kcmil (for CFS365JN only)
CFSL400	600-800A lug kit (6 lugs per kit) (2)#2-600kcmil
Shorting bars (no fuse kits)	
CFSSB60	60A shorting bar kit (3 links per kit)
CFSSB100	100A shorting bar kit (3 links per kit)
CFSSB200	200A shorting bar kit (3 links per kit)
CFSSB400	400A shorting bar kit (3 links per kit)
CFSSB680	600 & 800A shorting bar kit (1 link per kit)
Auxiliary contacts (NEMA ratings AC A600 DC N600)	
CFSAUXH1②	Aux contact holder (CFS361C5 & CFS361J5)
CFSAUX1NO	Aux contact 1 NO (30-800A Sws)
CFSAUX1NC	Aux contact 1 NC (30-800A Sws)
CFS11AUX	1NO, 1NC aux contact kit (side mount for 200kA switches)
CFS22AUX	2NO, 2NC aux contact kit (side mount for 200kA switches)
Terminal shrouds (line or load)	
CFSTS200N⑧	200A shroud kit (line or load 3-pole kit)
CFSTS400N⑧	400A shroud kit (line or load 3-pole kit for CFS365JN only)
CFSTS680⑥	600/800A 3-pole shroud kit
CFSTS6804⑥	600/800A 4-pole shroud kit
30A compact switch kits	
CFSPLK	Shaft padlocking kit for 30A compact switch when door is open③
CFSH5CDM	Direct mount handle kit for CFS361C5
CFSH5JDM	Direct mount handle kit for CFS361J5

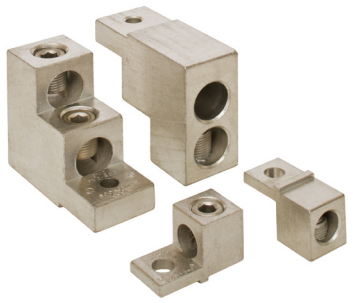

CFSL200 & 400



CFSAUX1NC



CFSSB100 - CFSSB400

NFPA 79 kits (if auxiliary contacts are needed, see table on page 7)

Kits provide an operating shaft suitable for use with all heavy duty handles (not for use with CFSH5 handles).
Kits also provide an internal operating handle and an internal OFF padlocking provision.

CFSNFPA1④	For use with CFS361C5 & CFS361J5
CFSNFPA2N⑤	For use with CFS361JN, CFS361CN, CFS362JN1, CFS362JN, CFS363JN & CFS364JN
CFSNFPA3N⑤	For use with CFS365JN only

① Supplied as standard on 30-100A switches
② CFS361C5 will accept (4) aux contacts without an aux contact holder. CFS361J5 will accept (2) aux contacts without an aux contact holder.
③ Supplied as standard on all but 30A, 100kA compact switches.
④ 12.6 in. (320 mm) long operating shaft included
⑤ 12.7 in. (323 mm) long operating shaft included
⑥ Line side terminal shrouds supplied with switch
⑦ Defeatable cover interlock included. Cover cannot be opened when the handle is padlocked in the OFF position.
⑧ Neither line or load terminal shrouds are supplied as standard with new style 200 & 400A switches.

Dimensions and Technical Characteristics

Type CFS Compact Fusible Switches

UL & CSA Technical Characteristics And Panel Space Requirements

Catalog Number	Amps	Fuse Class	Ac Short Circuit Rating	Electrical Endurance	Mechanical Endurance	Panel Space Requirements - in. (mm)		
						Height	Width	Depth①
CFS361C5	30	CC	100kA	6000	10000	4.56 (116)	3.78 (96)	6.00 (152)
CFS361J5	30	J	100kA	6000	10000	4.56 (116)	4.15 (105)	6.00 (152)
CFS361JN	30	J	200kA	6000	10000	5.35 (136)	5.89 (150)	6.00 (152)
CFS361JLN	30	J	200kA	6000	10000	5.35 (136)	5.89 (150)	6.00 (152)
CFS362JN1	60	J	100kA	6000	10000	5.35 (136)	5.89 (150)	6.00 (152)
CFS362JN	60	J	200kA	6000	10000	7.32 (186)	5.89 (150)	6.00 (152)
CFS362JLN	60	J	200kA	6000	10000	7.32 (186)	5.89 (150)	6.00 (152)
CFS363JN	100	J	200kA	6000	10000	7.32 (186)	5.89 (150)	6.00 (152)
CFS363JLN	100	J	200kA	6000	10000	7.32 (186)	5.89 (150)	6.00 (152)
CFS364JN	200	J	200kA	6000	8000	11.46 (291)	7.72 (196)	6.00 (152)
CFS365JN	400	J	200kA	1000	6000	15.35 (390)	10.19 (259)	8.00 (203)
CFS366J	600	J	200kA	1000	5000	11.81 (300)	14.33 (364)	11 (280)
CFS466J	600	J	200kA	1000	5000	11.81 (300)	18.03 (458)	11 (280)
CFS367L	800	L	200kA	500	3500	11.81 (300)	14.33 (364)	11 (280)
CFS467L	800	L	200kA	500	3500	11.81 (300)	18.03 (458)	11 (280)

Wire Ranges Line & Load Lugs

Switch	Amperage Rating	UL Approved Wire Size (75° C)
CFS361J5	30	(1)#14-10
CFS361C5	30	(1)#14-10
CFS361JN	30	(1)#14-6
CFS362JN1	60	(1)#14-6
CFS362JN	60	(1)#12-1
CFS363JN	100	(1)#12-1
CFS364JN	200	(1)#3/0
CFS365JN	400	(1)600MCM
CFS366J	600	(2)350 MCM
CFS367L	800	(2)600 MCM

Auxiliary Contact Capability When An NFPA79 Kit Is Used

Switch	NFPA79 Kit	Aux Contacts That Can Be Installed
CFS361C5	CFSNFPA1	(2) Total, CFSAUX1NO or CFSAUX1NC
CFS361J5		(1) CFSAUX1NO or (1) CFSAUX1NC
CFS361JN	CFSNFPA2N	(2) Total, CFSAUX1NO or CFSAUX1NC②
CFS362JN1		
CFS362JN		
CFS363JN		
CFS364JN		
CFS365JN	CFSNFPA3N	(2) Total, CFSAUX1NO or CFSAUX1NC②

① Minimum dimensions from mounting surface to inside of cover.
Dimensions shown can be decreased if aux contacts are not required.
② For additional auxiliary contacts use side mounted CFS11AUX or CFS22AUX.

Dimensions

Type CFS Compact Fusible UL98 Switches

Dimensions - 30A, 100kA switches

CFS361C5

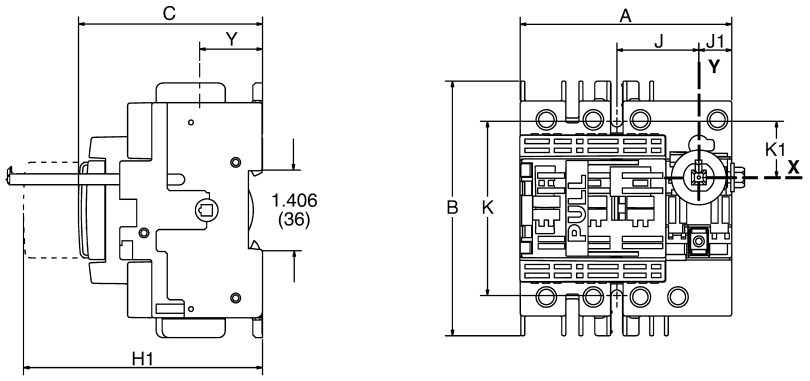

CFS361J5

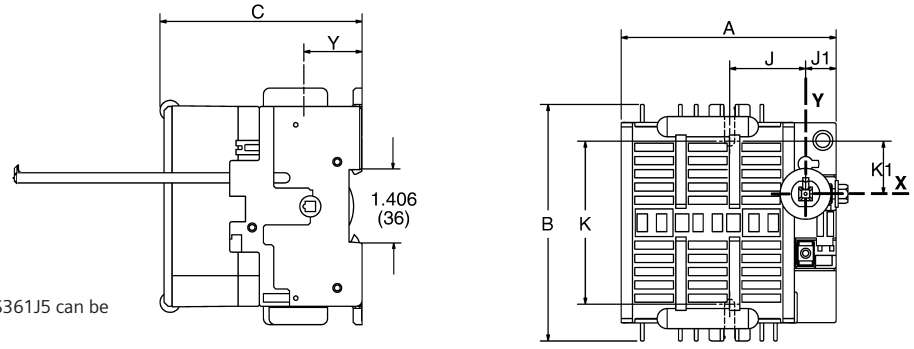

Note: CFS361C5 & CFS361J5 can be DIN-rail mounted

Dimensions - in. (mm)									
Catalog No.	**A**	**B**	**C**	**H1**	**J**	**J1**	**K**	**K1**	**Y**
CFS361C5	3.78 (96)	4.56 (116)	3.28 (84)	5.19 (132)	1.47 (37)	0.59 (15)	3.13 (80)	1.00 (25)	1.12 (28)
CFS361J5	4.13 (105)	4.56 (116)	3.89 (99)	–	1.47 (37)	0.59 (15)	3.30 (84)	1.00 (25)	1.12 (28)

Recommended minimum enclosure dimensions

CFS361C5
CFS361J5

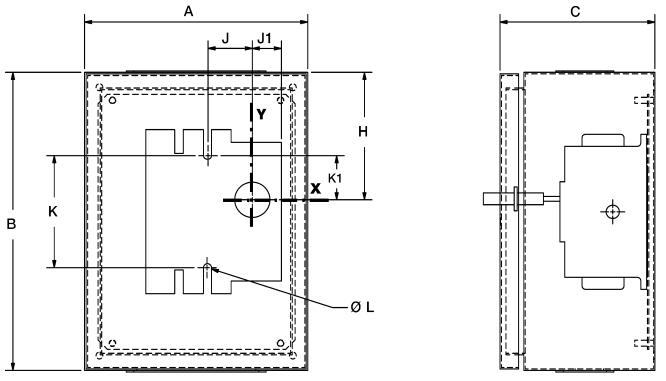

Dimensions - in. (mm)									
Catalog No.	**A**	**B**	**C**	**H**	**J**	**J1**	**K**	**K1**	**ØL**
CFS361C5	6.0 (152)	8.00 (203)	6.0 (152)	3.5 (89)	1.47 (37)	0.59 (15)	3.13 (80)	1.00 (25)	0.21 (5)
CFS361J5	6.0 (152)	8.00 (203)	6.0 (152)	3.5 (89)	1.47 (37)	0.59 (15)	3.30 (84)	1.00 (25)	0.21 (5)

Dimensions

Type CFS Compact Fusible UL98 Switches

Dimensions - 30-100A, 100kA & 200kA switches

CFS361JN
CFS362JN1
CFS362JN
CFS363JN

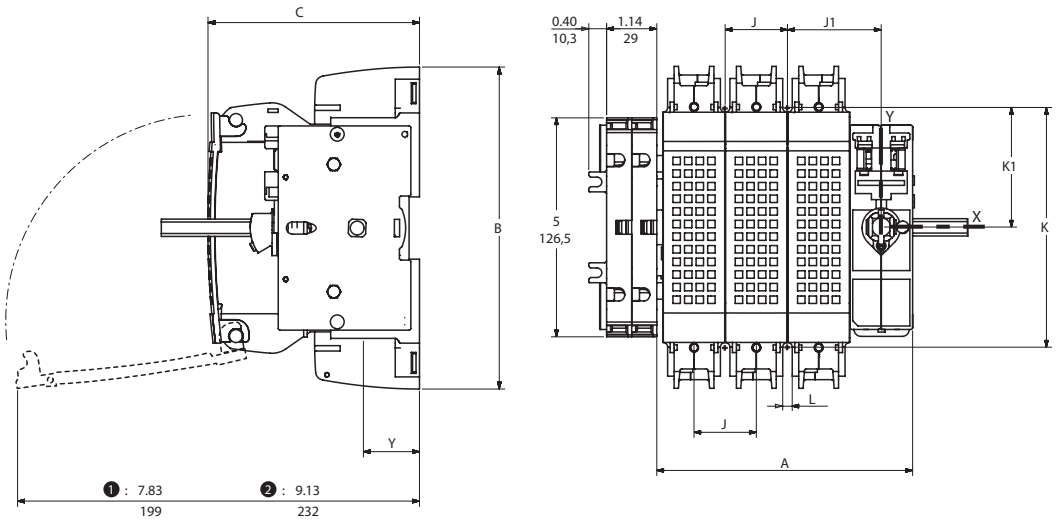

Dimensions - in. (mm)									
Catalog No.	**A**	**B**	**C**	**J**	**J1**	**K**	**K1**	**L**	**Y**
CFS361JN[a] **CFS362JN1**[a]	5.88 (149.5)	5.35 (136)	4.84 (123)	1.41 (36)	2.12 (54)	4.25 (108)	1.12 (54)	0.25 (6.5)	1.43 (36.5)
CFS362JN[b] **CFS363JN**[b]	5.88 (149.5)	7.32 (186)	4.84 (123)	1.41 (36)	2.12 (54)	5.45 (138.5)	2.73 (69.5)	0.21 (5.5)	1.16 (29.5)

Dimensions - 200A, 200kA switch

CFS364JN

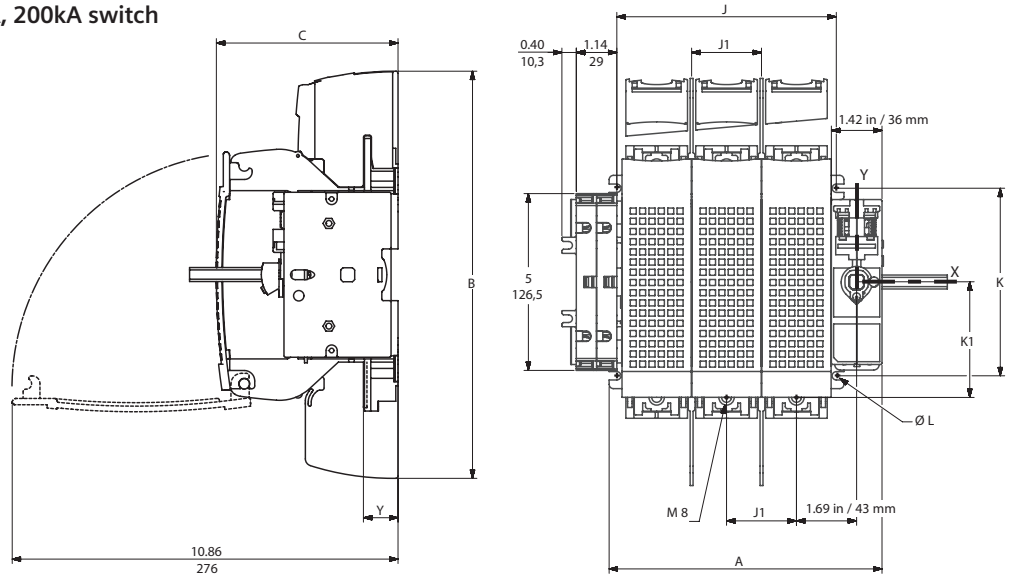

Dimensions - in. (mm)									
Catalog No.	**A**	**B**	**C**	**J**	**J1**	**K**	**K1**	**ØL**	**Y**
CFS364JN	7.67 (195)	11.45 (291)	5.11 (130)	6.18 (157)	1.96 (50)	5.27 (134)	3.24 (82.5)	0.23 (6)	0.96 (24.5)

Dimensions

Type CFS Compact Fusible UL98 Switches

Recommended minimum enclosure dimensions for 30-100A, 100kA & 200kA switches

CFS361JN
CFS362JN1
CFS362JN
CFS363JN

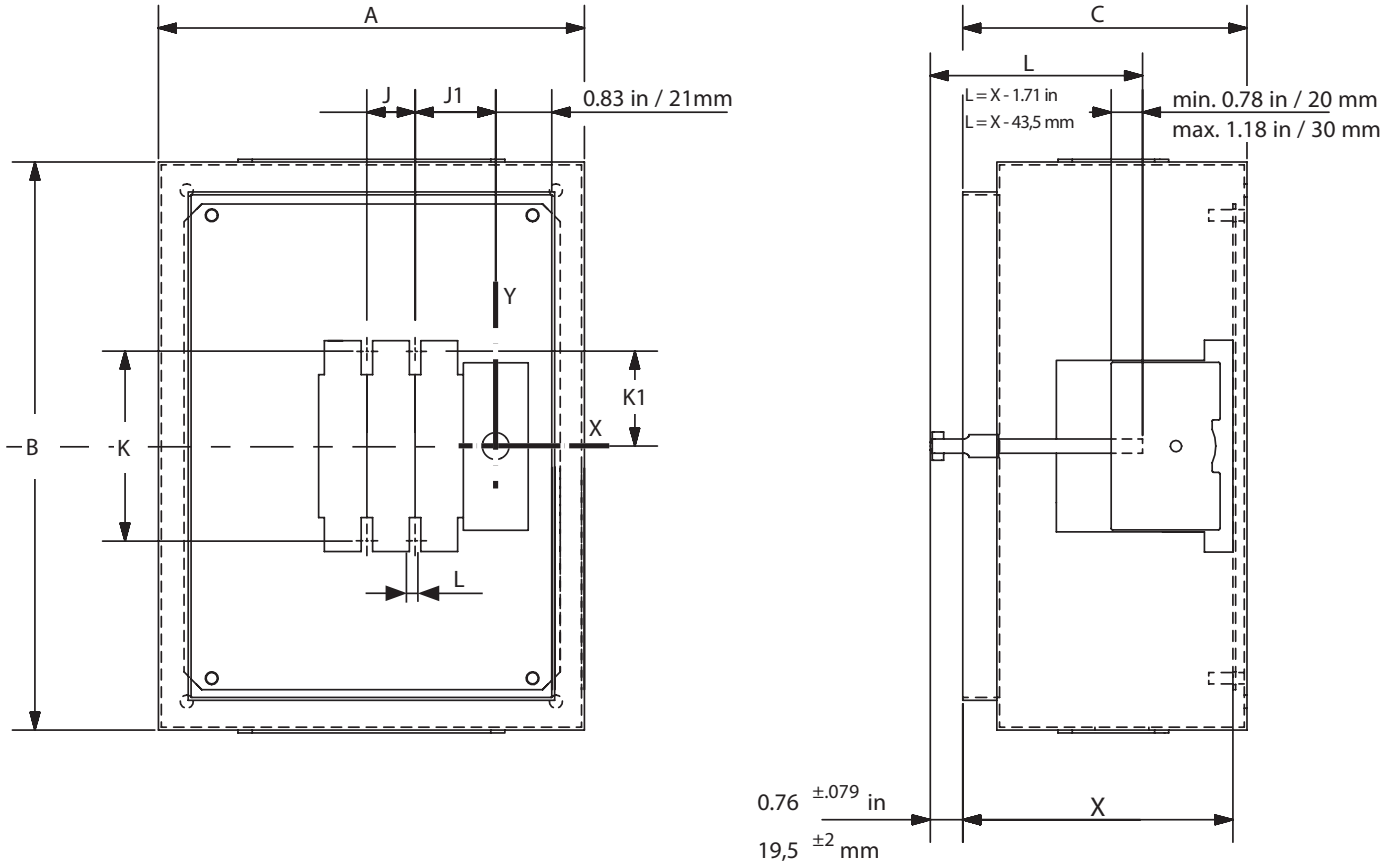

Dimensions - in. (mm)								
Catalog No.	**A**	**B**	**C**	**J**	**J1**	**K**	**K1**	**L**
CFS361JN **CFS362JN1**	10 (254)	10 (254)	6 (153)	1.41 (36)	2.12 (54)	4.25 (106)	1.12 (54)	0.25 (6.5)
CFS362JN **CFS363JN**	12 (305)	16 (406.5)	6 (153)	1.41 (36)	2.12 (54)	5.45 (138.5)	2.73 (69.5)	0.21 (5.5)

Dimensions

Type CFS Compact Fusible UL98 Switches

Recommended minimum enclosure dimensions for 200A, 200kA switches

CFS364JN

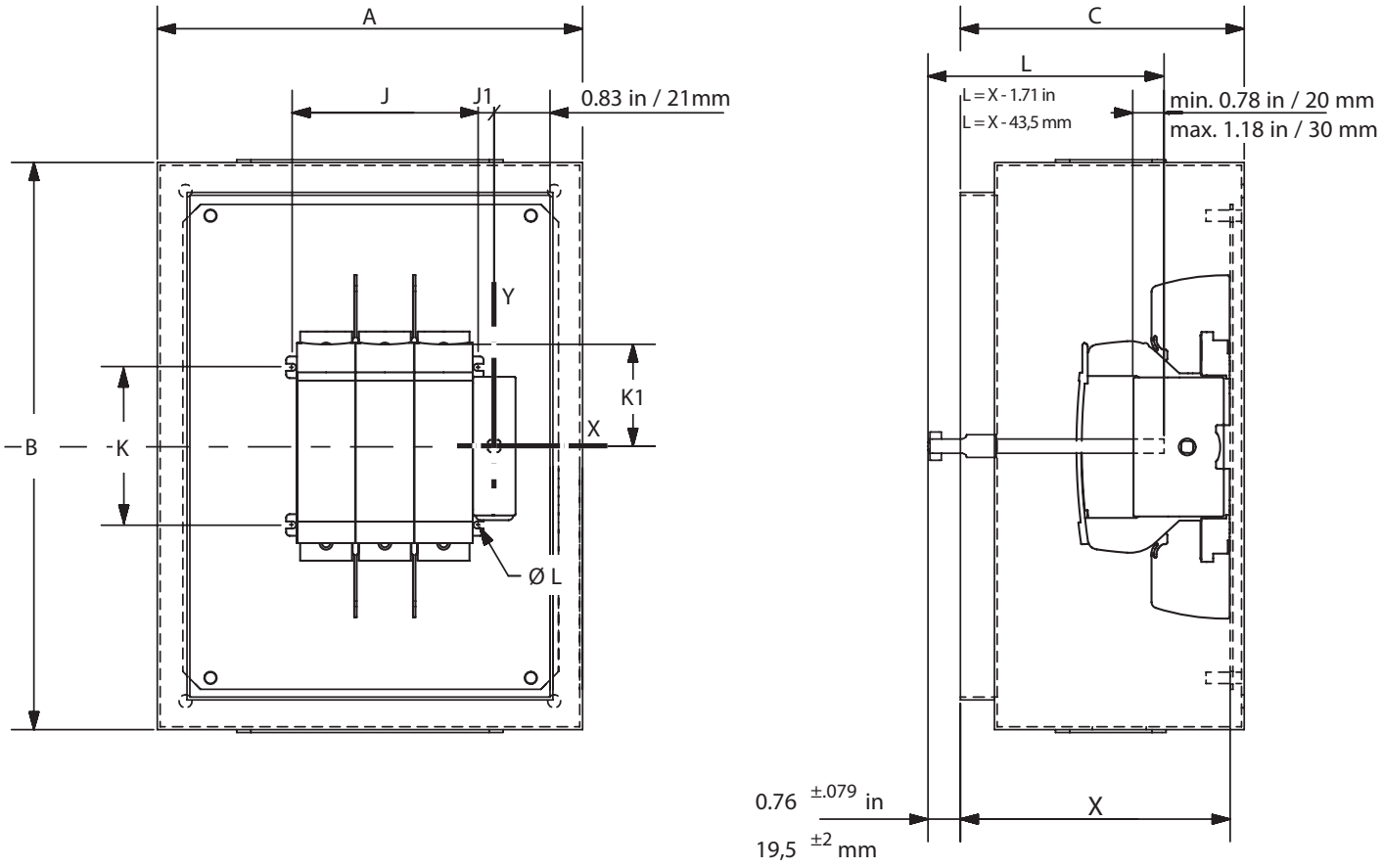

Dimensions - in. (mm)								
Catalog No.	**A**	**B**	**C**	**J**	**J1**	**K**	**K1**	**ØL**
CFS364JN	20 (508)	24 (610)	8 (203.5)	6.18 (157)	1.69 (43)	5.27 (134)	3.24 (82.5)	0.23 (6)

Dimensions

Type CFS Compact Fusible UL98 Switches

Dimensions - 400A, 200kA switch

CFS365JN

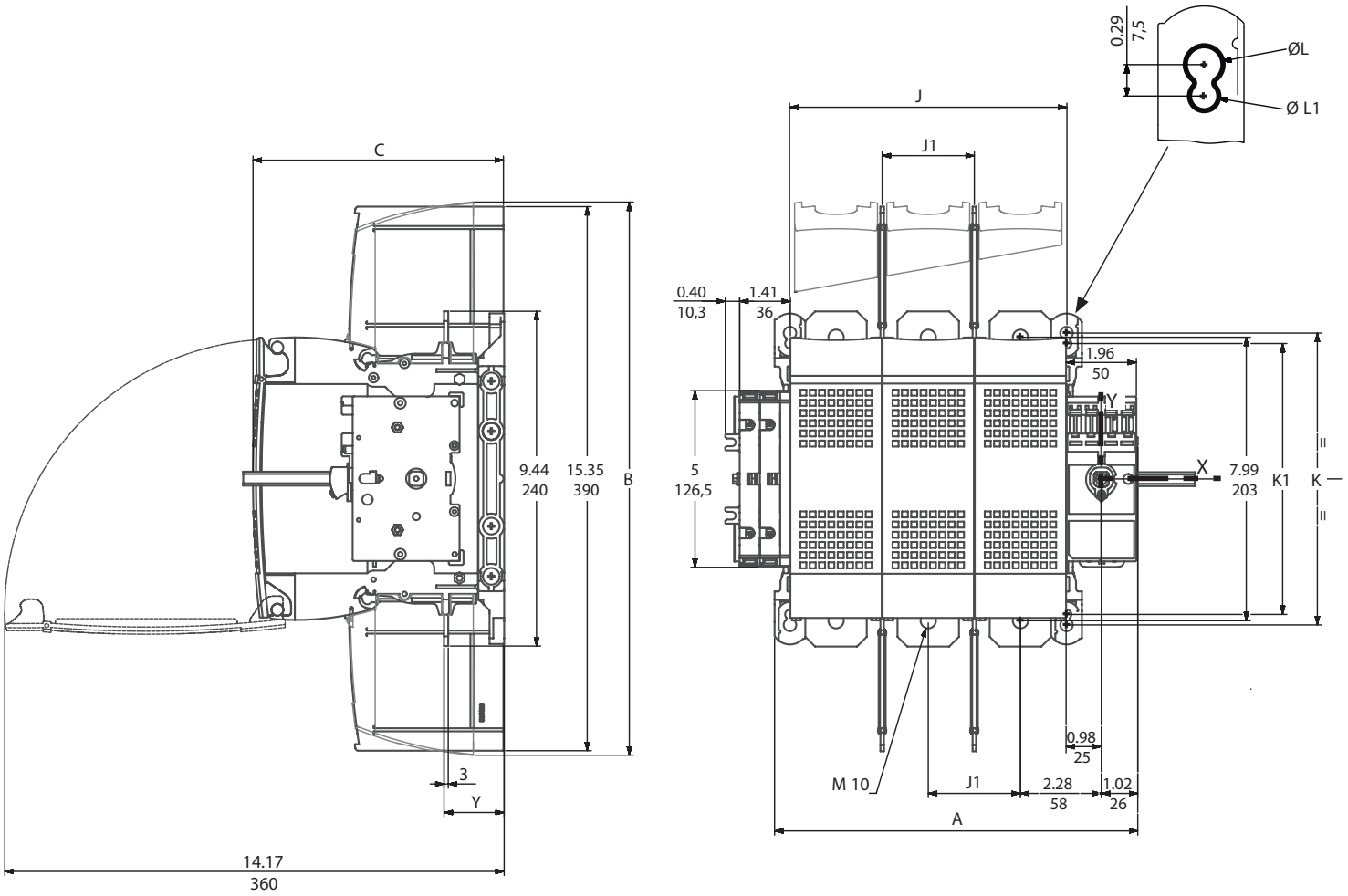

Dimensions - in. (mm)										
Catalog No.	**A**	**B**	**C**	**J**	**J1**	**K**	**K1**	**ØL**	**ØL1**	**Y**
CFS365JN	10.24 (260)	15.61 (396.5)	7.09 (180)	7.80 (198)	2.60 (66)	8.23 (209)	7.64 (194)	0.35 (9)	0.27 (7)	1.69 (43)

Dimensions

Type CFS Compact Fusible UL98 Switches

Recommended minimum enclosure dimensions

CFS365JN

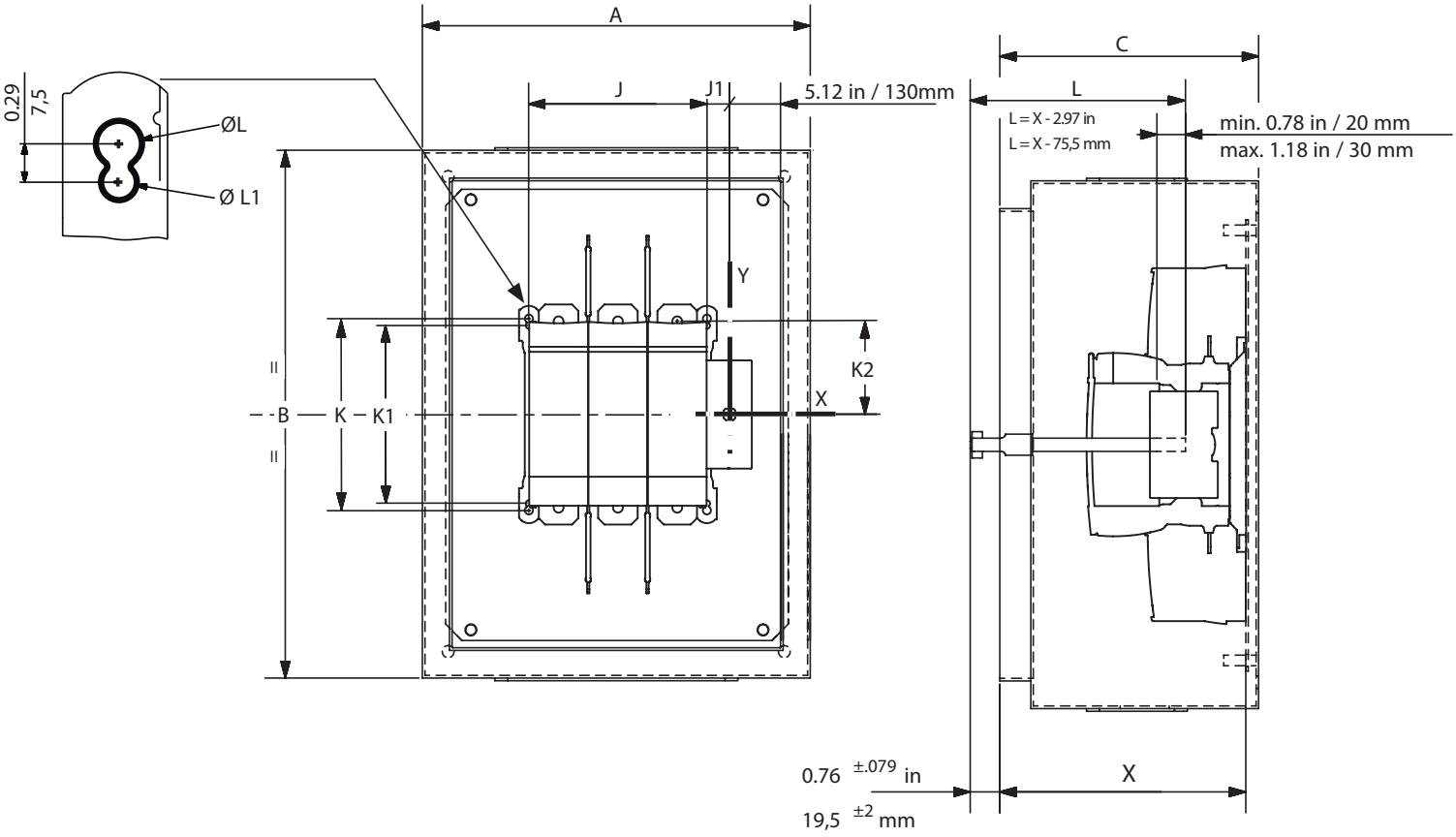

Dimensions - in. (mm)										
Catalog No.	**A**	**B**	**C**	**J**	**J1**	**K**	**K1**	**K2**	**ØL**	**ØL1**
CFS365JN	31.49 (800)	39.37 (1000)	11.81 (300)	7.80 (198)	0.98 (25)	8.23 (209)	7.64 (194)	3.99 (101.5)	0.36 (9)	0.27 (7)

Dimensions

Type CFS Compact Fusible UL98 Switches

Dimensions -
600A & 800A, 200kA switches

CFS366J
CFS466J
CFS367L
CFS467L

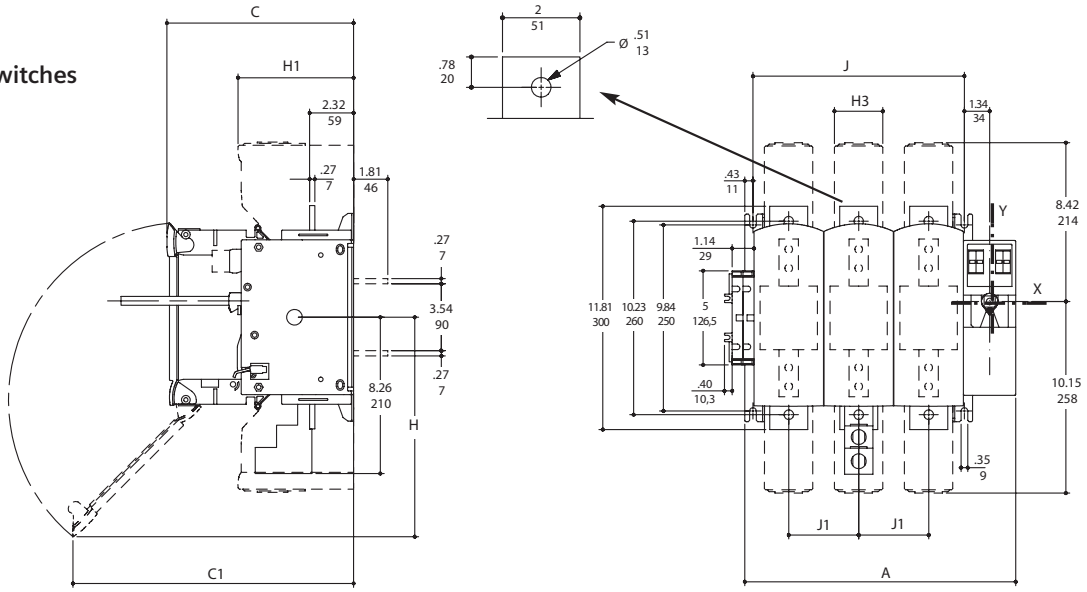

Dimensions - in. (mm)								
Catalog No.	**A**	**C**	**C1**	**H**	**H1**	**H3**	**J**	**J1**
CFS366J CFS367L	14.33 (364)	9.84 (250)	14.72 (374)	11.69 (297)	6.10 (155)	2.56 (65)	11.18 (284)	3.70 (94)
CFS466J CFS467L	18.03 (458)						14.88 (378)	

Recommended minimum enclosure dimensions

CFS366J
CFS466J
CFS367L
CFS467L

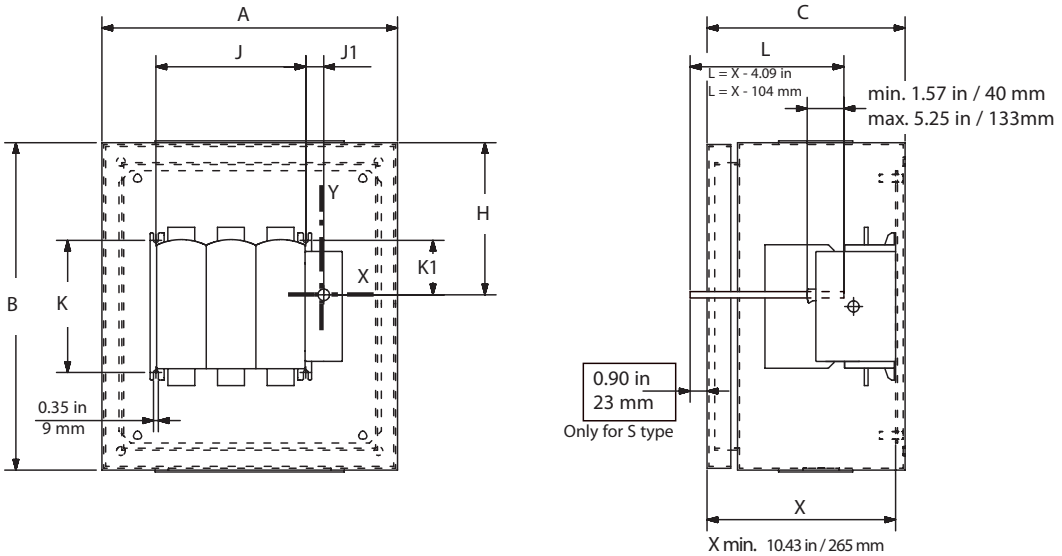

Dimensions - in. (mm)								
Catalog No.	**A**	**B**	**C**	**H**	**J**	**J1**	**K**	**K1**
CFS366J CFS367L	36 (914.5)	48 (1219)	12 (305)	23.13 (587.5)	11.18 (284)	1.34 (34)	9.84 (250)	4.05 (103)
CFS466J CFS467L	36 (914.5)	48 (1219)	12 (305)	23.13 (587.5)	14.88 (378)	1.34 (34)	9.84 (250)	4.05 (103)

Dimensions

Type CFS Compact Fusible UL98 Switches

Dimensions - handles and door drillings
Dimensions shown in inches and millimeters ( ).

Compact handles:
CFSH5B12N
CFSH5R12N
CFSH5B4N
CFSH5R4N

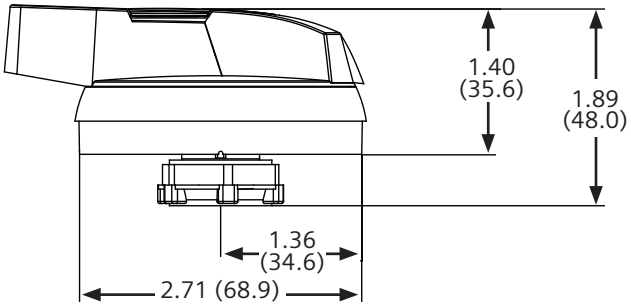

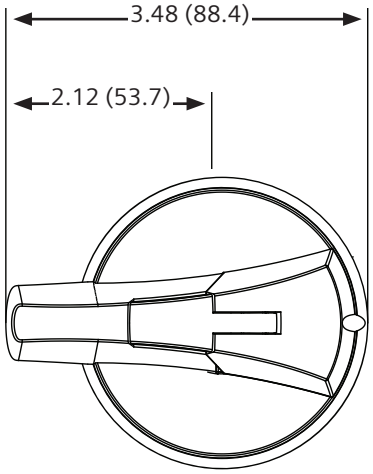

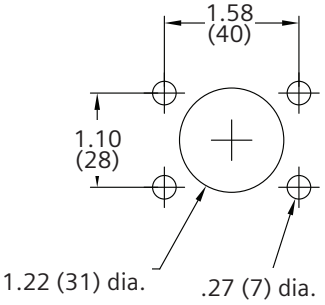

Door drilling

Heavy duty handles:

CFSH10B12N	CFSH10BL12N	CFSH12BL12
CFSH10R12N	CFSH10RL12N	CFSH12RL12
CFSH10B4N	CFSH10BL4N	CFSH12BL4
CFSH10R4N	CFSH10RL4N	CFSH12RL4

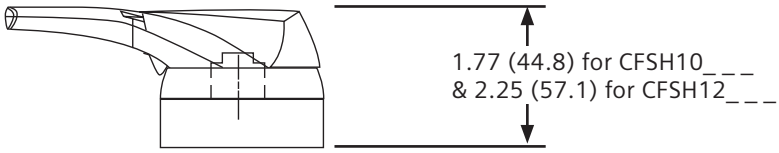

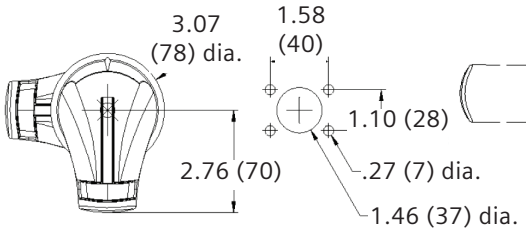

Door drilling - typical

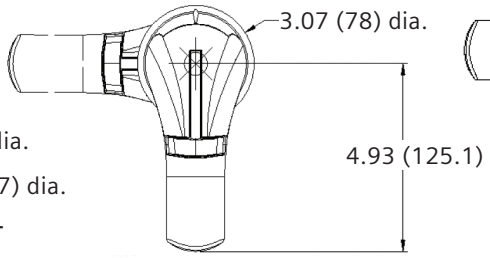

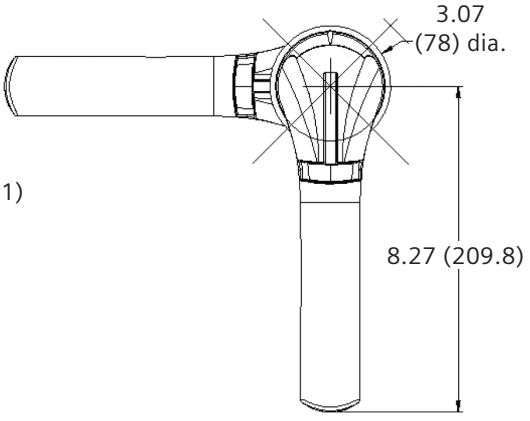

General Information

Type CNFS Switches, Shafts And Handles

Description

Siemens Type CNFS compact non-fusible switches meet UL 98 requirements and can be used in either service entrance or branch circuit applications. They are available in 30-800A, 3-pole switches and are all rated 600VAC maximum.

All are open style, designed to be panel mounted and are UL listed under file number #E121152 or #E68312 and CSA certified under file number #222227. A variety of door mounted rotary operators are available with Type 1, 3R, 12 or 4/4X ratings.

These non-fusible switches are UL listed under file #E201138 and CSA certified under file #112964. They also conform to IEC standard 60947-3.



Catalog Numbering System

CNFS Switches

Compact Non-Fusible Switch

CNFS	3	6	1	N

- Number of poles 3 = 3
- Max. Voltage Rating 6 = 600V
- Ampere rating
  - 1 = 30A
  - 2 = 60A
  - 3 = 100A
  - 4 = 200A
  - 5 = 400A
  - 6 = 600A
  - 7 = 800A
- Design type
  - N = Compact design

Operating Handles

CNFS Type Handle

CNFS	10	BP	12	2

- Compatiable shaft cross section
  - 5 = 5 x 5 mm²
  - 10 = 10 x 10 mm²
- Handle color and style
  - D = Direct mount, rotary
  - BP = Black & blue, pistol
  - RP = Red & yellow, pistol
- NEMA type
  - 12 = (1), 3R, and 12
  - 4 = (1), 3R, 12, and 4/4X
- Current range
  - 1 = 30-100A N Series
  - 2 = 100-400A
  - 3 = 600-800A

CNFS Operating Shafts

CNFS Type Shaft

CNFSS	10	200	3

- Shaft cross section
  - 5 = 5 x 5 mm²
  - 10 = 10 x 10 mm²
  - 12 = 12 x 12 mm²
- Shaft length
  - 200 = 200 mm
  - 320 = 320 mm
  - 400 = 400 mm
- Current range
  - 1 = 30-100A N Series
  - 2 = 100-400A
  - 3 = 600-800A

Type CNFS Compact Non-Fusible Switches

Features And Ordering Information

Features

- 30 - 800A ratings
- UL Listed under file #E201138
  & CSA Certified under file #112964 or #703166
- Options to have door mounted pistol handles with defeatable cover interlock or direct mounted handles.
- Meets UL 98 requirements
- Compact size
- All short circuit protection ratings require the use of Class J fuses in the circuit.
- Load break and horsepower rated
- Quick make and break operation
- All external handles and direct handles for 600-800A switches are padlockable with up to (3) padlocks with 5/16" hasps in the OFF postition. Direct handles for 30-100A switches are padlockable with (1) padlock with 3/16" hasps in the OFF position.
- All switches are able to be panel mounted. Catalog numbers **CNFS361N**, **CNFS362N**, & **CNFS363N** can also be DIN-rail mounted and can either be front or side operated with standard pistol handles.
- Handles are available in Type 1, 3R, 4/4X & 12 ratings

Shaft



CFSS10200HN

Handle



CFSH10BL12N

Lugs/Accessories



CFSL200

Ordering information

1. Select the panel mounted switch required based on Ampere, HP and AIC requirements. Switches with a right hand mechanism are standard.
2. Select handle based on environmental rating required.
3. For door mounted handles, select operating shaft based on enclosure depth. For enclosure depths of 9.00" or less from panel mounting surface to inside of door use up to 200 mm long shafts. From 9.00" to 13.00" use up to 320 mm long shafts. For deeper enclosures use up to 400 mm long shafts. For direct mount handles, no shaft is needed.

Note: Be sure to check shaft and handle compatibility with the switch selected by using information provided in the selection tables.

4. Line & load lugs are provided as standard on 30-100A switches. Terminal kits are available for 200-800A switches if needed.
5. Auxiliary contacts are available if needed. Each switch will accept up to (2) aux contact modules, containing (2) contacts in each.
6. 30-100A Series N switches are designed to prevent inadvertent contact with live parts and shields are not required but are offered as terminal shrouds. 100-400A switches are not supplied with terminal shields. They are available as separate field installed kits for both line and load terminals by amperage rating. Line side terminal screens are provided for 600-800A switches.

Shaft and Handle Selection

Type CNFS Compact Non-Fusible Switches

Type CNFS compact non-fusible switches

Switch Ampere Rating	Catalog Number	Max Horsepower Ratings			Short Circuit Rating	
		240V 3Ø AC	480V 3Ø AC	600V 3Ø AC	@ 480VAC	@ 600VAC
30	**CNFS361N**①	10	20	25	100	100
60	**CNFS362N**①	20	40	50	100	100
100	**CNFS363N**①	20	50	50	100	25
200	**CNFS364N**②	75	150	200	200	200
400	**CNFS365N**②	125	250	350	200	200
600	**CNFS366N**②	200	400	350	200	200
800	**CNFS367N**②	200	500	500	100	100

Direct mount rotary handles for compact non-fusible switches

Catalog Number	Color	Use with compact non-fusible switches
CNFSHD1	Blue	CNFS361N, CNFS362N, CNFS363N
CNFSHD2	Black	CNFS364N, CNFS365N
CNFSHD3	Black	CNFS366N, CNFS367N

Operating shafts for compact non-fusible switches

Catalog Number	Shaft length in. (mm)	Switch and handle compatibility
CNFSS52001	7.9 (200)	5mm x 5mm for use with CNFS361N, CNFS362N and CNFS363N switches and with "CNFSH5" handles only
CNFSS53201	12.6 (320)	
CNFSS54001	15.7 (400)	
CFSS10200HN	7.9 (200)	10mm x 10mm for use with "CFSH10" handles and with CNFS364N and CNFS365N switches only
CNFSS103202	12.6 (320)	
CFSS10400HN	5.7 (400)	
CNFSS152003	7.9 (200)	15mm x 15mm for use with "CFSH12" handles and with CNFS366N and CNFS367N switches only
CNFSS153203	12.6 (320)	
CNFSS154003	5.7 (400)	

Compact rotary operating handles for non-fusible switches – door mounted

Catalog Number	Color	UL Type	Operating shaft compatibility	Use with non-fusible compact switches
CNFSH5BP121	Black	NEMA 1, 3R, 12	CNFSS52001, CNFSS53201, CNFSS54001	CNFS361N, CNFS362N, CNFS363N
CNFSH5RP121	Red/Yellow	NEMA 1, 3R, 12		
CNFSH5BP41	Black	NEMA 4/4X		
CNFSH5RP41	Red/Yellow	NEMA 4/4X		
CFSH10BL12N	Black	NEMA 1, 3R, 12	CFSS10200HN, CNFSS103202, CFSS10400HN	CNFS364N, CNFS365N
CFSH10RL12N	Red/Yellow	NEMA 1, 3R, 12		
CFSH10BL4N	Black	NEMA 4/4X		
CFSH10RL4N	Red/Yellow	NEMA 4/4X		
CFSH12BL12	Black	NEMA 1, 3R, 12	CNFSS152003, CNFSS153203, CNFSS154003	CNFS366N, CNFS367N
CFSH12RL12	Red/Yellow	NEMA 1, 3R, 12		
CFSH12BL4	Black	NEMA 4/4X		
CFSH12RL4	Red/Yellow	NEMA 4/4X		



CNFS366N



CNFSS154003



CFSH12RL12

① Line and load lugs are included.
② Line and load lugs are not included. Order from table on following pages if needed.
③ All switches can be rotated 180° for left hand operation as standard.
④ Compact pistol grip design (2.75" long) with defeatable cover interlock. Cover can be opened when handle is padlocked in the OFF position.
⑤ Defeatable cover interlock provided. Cover cannot be opened when handle is in the OFF position.
⑥ Flange mounting is not available for non-fusible switches.

Selection and Accessories

Type CNFS Compact Non-Fusible Switches

Operating Shafts for 600-800A Switches ①

Catalog Number	Shaft Length in. (mm)	Switch & Handle Compatibility
CNFSS122003	7.9 (200)	12mm x 12mm for use with CNFS366 & CNFS367 switches & with "CNFSH12" handles only
CNFSS123203	12.6 (320)	
CNFSS124003	15.7 (400)	

600-800A direct and external (pistol) operating handles for front operation ⑨ (for use with CNFS366 & CNFS367 switches only)

Catalog Number	Color	UL Type	Style Type	Operating Shaft Compatibility
CNFSHD3	Black	---	Direct	N/A
CNFSH12BP43	Black	4/4X	External	CNFSS122003, CNFSS123203 & CNFSS124003
CNFSH12RP43	Red & Yellow			



CNFSL200 & 400

Type CNFS Non-Fusible Switch Accessories

Catalog Number	Description
Terminals ②	
CNFSL200	100 - 200A lug kit (6 lugs per kit), (1) 6-300 MCM
CNFSL400	400A lug kit (6 lugs per kit), (1) 2-600 MCM
CNFSL400D	400A double-hole lug kit (6 lugs per kit), (2) 2x (#6-350 MCM)
CNFSL600 ③	600 - 800A lug kit (6 lugs per kit), (2) 2x (#2-600 MCM)
Auxiliary Contacts ④	
CNFS1AUX1	30 - 100A Series N - 1 AC, 1 NO + 1 NC
CNFS2AUX1	30 - 100A Series N - 1 AC, 2 NO
CNFS1AUX2	100 - 800A - 1st AC NO/NC
CNFS2AUX2	100 - 800A - 2nd AC NO/NC
Terminal Shrouds & Screens	
CNFSTS100 ⑤	30 - 100A Series N 3-pole line/load side shroud kit
CNFSTSC200T ⑥	100 - 200A 3-pole line side screen kit
CNFSTSC200B ⑥	100 - 200A 3-pole load side screen kit
CNFSTSC400T ⑥	400A 3-pole line side screen kit
CNFSTSC400B ⑥	400A 3-pole load side screen kit
CNFSTSC600B ⑦	600A 3-pole load side screen kit
CNFSTSC800B ⑦	800A 3-pole load side screen kit
Shaft Support	
CNFSSG ⑧	Long Shaft Guide Cone for all CNFS compatible shafts (30-800A)



CNFS1AUX1



CNFSTSC400T

① All shafts for 600-800A switches come provided with cross-section adaptors to properly assemble with the listed 600-800A external handles.
② Supplied as standard on 30-100A Series N switches.
③ 800A switches can hold (2) lugs per terminal & will require (2) lug kits per switch.
④ Aux contact modules for 30-100A Series N switches are side mounted. Aux contact modules for 100-800A switches are front mounted.
⑤ 30-100A Series N switches are designed to protect the user from contact with the terminals. Terminal shrouds can be purchased as additional protection if desired. (2) shroud kits would be required for full coverage.
⑥ Neither line nor load terminal screens are supplied as standard with 100-400A switches. It is necessary to purchase both line and load side terminal screens to fully cover the switch.
⑦ 600-800A switches are provided with line side terminal screens for protection. Load side terminal screens must still be purchased.
⑧ Shaft guides are suggested to stabilize "long" shafts of at least 12.6 inches/320 mm in length.
⑨ Defeatable cover interlock provided. Cover cannot be opened when handle is in the OFF position.

Additional Accessories

Type CNFS Compact Non-Fusible Switches

Auxiliary contacts for use with non-fusible switches

Catalog Number	Number of Contacts	Use with Non-fusible Contact Switches
CNFS1AUX1	1 Normally Open + 1 Normally Closed	CNFS361N, CNFS362N, CNFS363N
CNFS2AUX1	2 Normally Closed	
CNFS1AUX2	1st Auxiliary Contact: 1 Normally Open + 1 Normally Closed	CNFS364N, CNFS365N, CNFS366N, CNFS367N
CNFS2AUX2	2nd Auxiliary Contact: 1 Normally Open + 1 Normally Closed	

Terminal shrouds for use with non-fusible switches

Catalog Number	Shroud Location	Use with Non-fusible Contact Switches
CNFSTS100	Top and Bottom	CNFS361N, CNFS362N, CNFS363N
CNFSTSC200T	Top	CNFS364N
CNFSTSC200B	Bottom	
CNFSTSC400T	Top	CNFS365N
CNFSTSC400B	Bottom	
CNFSTSC600B	Bottom	CNFS366N
CNFSTSC800B	Bottom	CNFS367N

Terminal lug kits for use with non-fusible switches

Catalog Number	Wire Sizes	Use with Non-fusible Contact Switches
Included	#10-2/0	CNFS361N, CNFS362N, CNFS363N
CFSL200	#6-300MCM	CNFS364N
CFSL400N	#4-600MCM	CNFS365N
CFSL400	#6-350MCM (2X)	CNFS366N
CNFSL800	#2-600MCM (4X)	CNFS367N

Dimensions

Type CNFS Compact Non-Fusible UL98 Switches

Dimensions - 30A to 100A, 100kA switches

Recommended minimum enclosure dimensions for
30-100A, 100kA & 200kA switches

CNFS361N
CNFS362N
CNFS363N

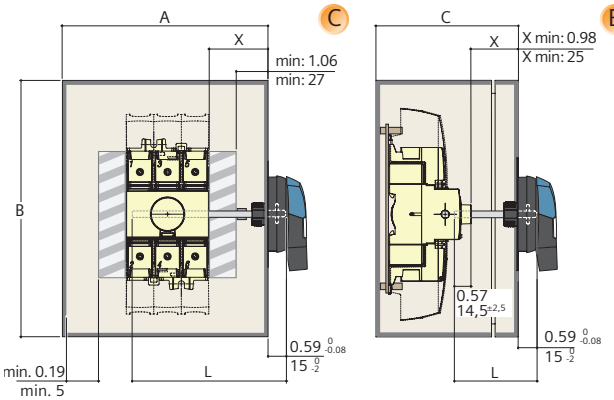

Minimum enclosure dimensions

		CNFS361N	CNFS362N	CNFS363N
A	in	8	8	8
	mm	203	203	203
B	in	12	12	14
	mm	305	305	356
C	in	6	6	6
	mm	153	153	153

A C	B
L = X + 3.97 in L = X + 101 mm	L = X + 1.51 in L = X + 38,5 mm

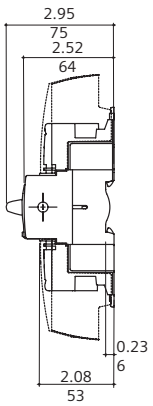

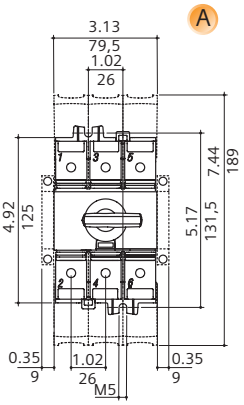

Dual dimensions in/mm

① 1 switched fourth pole module (1 per device max.) or 1 unswitched neutral pole or 1 protective earth module or 1 auxiliary contact.

② 1 auxillary contact only.

Note: Max. 4 additional blocks.

Dimensions

Type CNFS Compact Non-Fusible UL98 Switches

Dimensions - 200A, 200kA switch

Recommended minimum enclosure dimensions for 200A, 200kA switches

CNFS364N

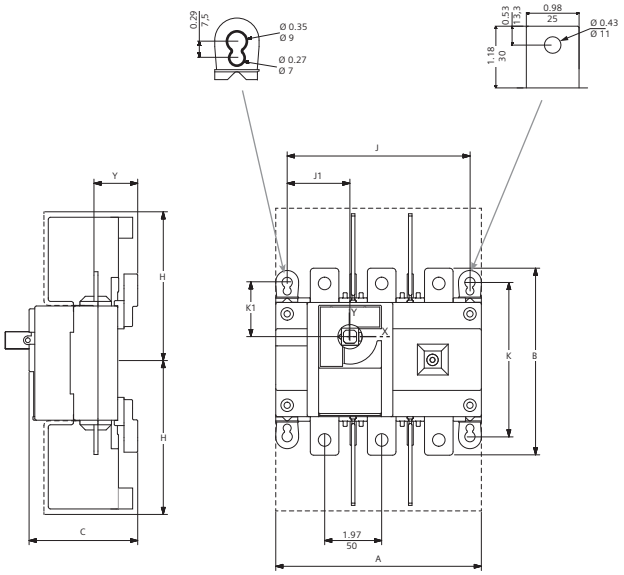

Dimensions																	
A		B		C		H		J		J1		K		K1		Y	
in	mm	in	mm	in	mm	in	mm	in	mm	in	mm	in	mm	in	mm	in	mm
7.08	180	6.30	160	3.74	95	5.21	132,5	6.30	160	2.16	55	5.31	135	1.89	48	1.51	38.5

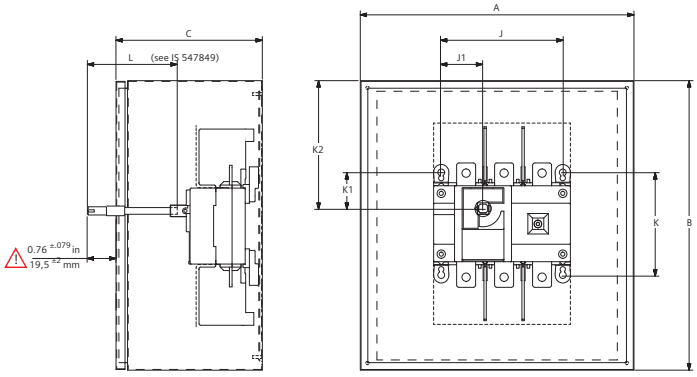

Dimensions															
A		B		C		J		J1		K		K1		K2	
in	mm	in	mm	in	mm	in	mm	in	mm	in	mm	in	mm	in	mm
15	406	24	610	6	152	6.30	160	2.16	55	5.31	135	1.89	48	12	305

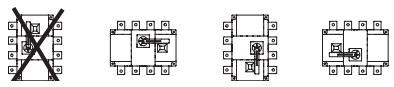

Mounting orientation

① 1 auxillary contact only.

Note: Max. 4 additional blocks.

Dimensions

Type CNFS Compact Non-Fusible UL98 Switches

Dimensions - 400A, 200kA switch

CNFS365N

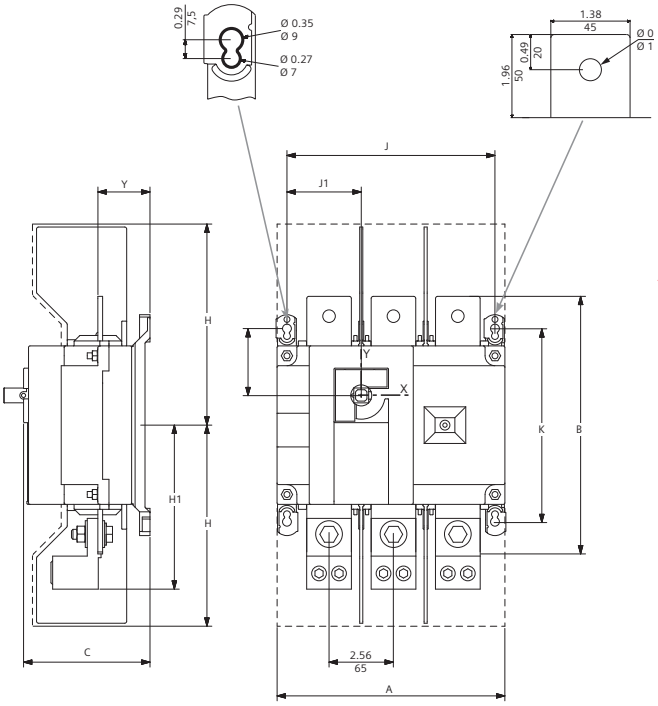

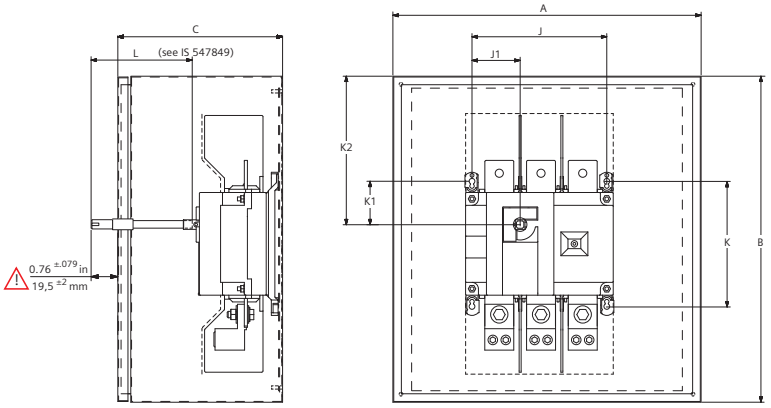

Dimensions															
A		B		C		J		J1		K		K1		K2	
in	mm	in	mm	in	mm	in	mm	in	mm	in	mm	in	mm	in	mm
20	508	30	762	8	203	8.26	210	2.95	75	7.67	195	2.70	68,5	15	381

Dimensions																			
A		B		C		H		H1		J		J1		K		K1		Y	
in	mm	in	mm	in	mm	in	mm	in	mm	in	mm	in	mm	in	mm	in	mm	in	mm
9.05	230	10.23	260	4.92	128	8	203	6.53	166	8.26	210	2.95	75	7.67	195	2.65	67,5	2.08	53

Mounting orientation

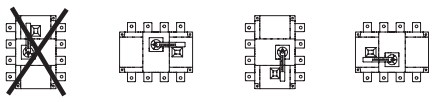

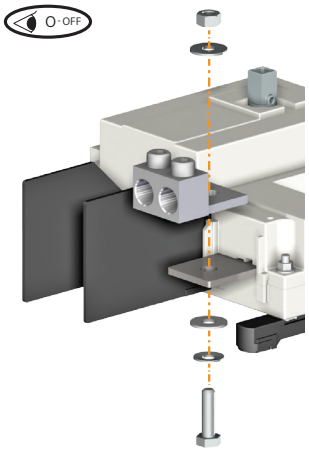

Connection

Lugs	Used For
CNFS400D	CNFS365N

Ref. lugs	Designation	Quantity per reference.	Size (AWG)		Openings per lug.	Torque		Size
			min.	max.		lb.in	Nm	
CNFSL400D	PANDUIT LAM2A 350	6	**# 6**	**350 Kcmil**	**2**	**398**	**45**	**19**

Dimensions

Type CNFS Compact Non-Fusible UL98 Switches

Dimensions - 600A, 200kA and 800A, 100kA switches

CNFS366N

Dual dimensions in/mm

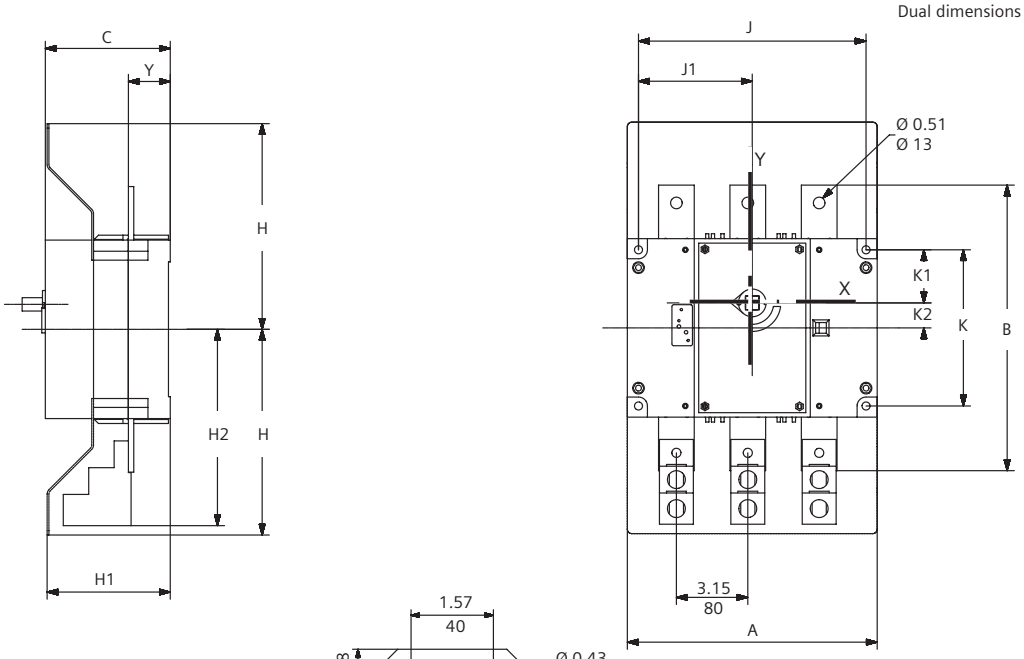

CNFS367N

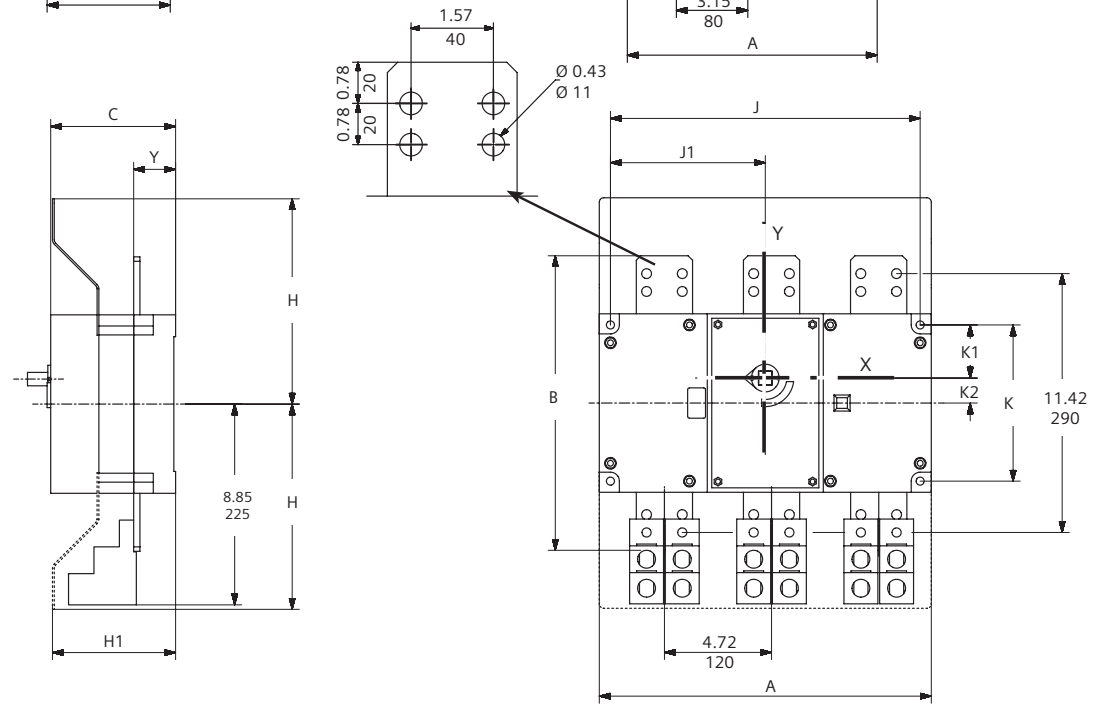

Dimensions																								
Catalog No.	**A**		**B**		**C**		**H**		**H1**		**H2**		**J**		**J1**		**K**		**K1**		**K2**		**Y**	
	in	mm	in	mm	in	mm	in	mm	in	mm	in	mm	in	mm	in	mm	in	mm	in	mm	in	mm	in	mm
3P	11.02	280	12.60	320	5.51	140	9.05	230	5.43	138	8.66	220	10.04	255	5	127.5	6.88	175	2.34	59.5	1.10	28	1.85	47
3P	14.64	373	13	330	5.51	140	9.05	230	5.43	138	/	/	13.66	347	6.83	173.5	6.88	175	2.34	59.5	1.10	28	1.85	47

Dimensions

Type CNFS Compact Non-Fusible UL98 Switches

Recommended minimum enclosure dimensions for 600A and 800A switches

❶ CNFS366N
❷ CNFS367N

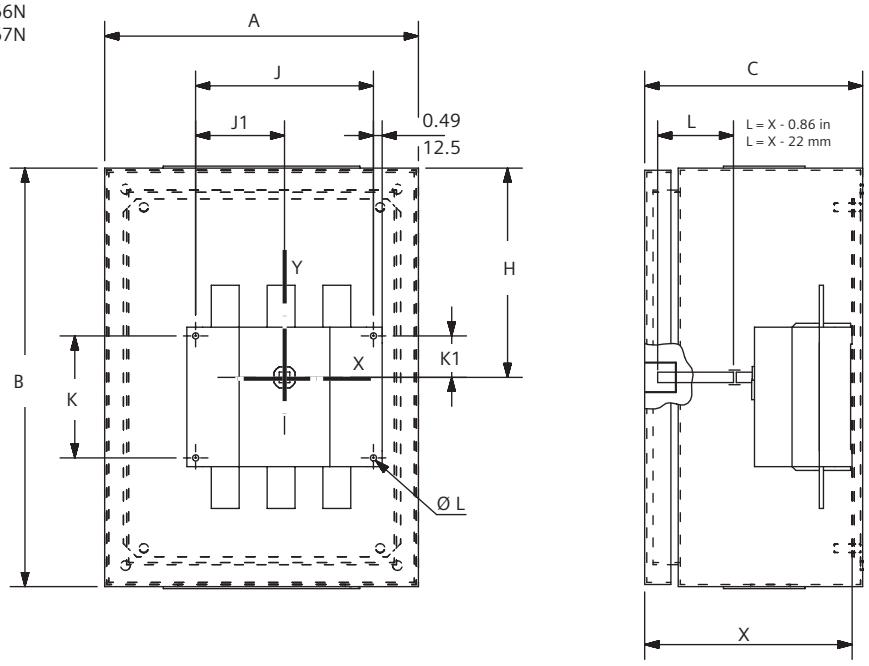

Dimensions																		
Catalog No.	A		B		C		H		J		J1		K		K1		ØL	
	in	mm	in	mm	in	mm	in	mm	in	mm	in	mm	in	mm	in	mm	in	mm
CNFS366N	24	610	40	1016	12	305	20	508	11.04	255	5	127.5	6.88	175	2.34	59.5	0.35	9
CNFS367N	24	610	40	1016	12	305	20	508	13.66	347	6.83	173.5	6.88	175	2.34	59.5	0.35	9

Dimensions

Type CNFS Compact Non-Fusible UL98 Switches

Dimensions - handles and door drillings
Dimensions shown in inches and millimeters ( ).

Compact handles:
CNFSH5BP121
CNFSH5RP121
CNFSH5BP41
CNFSH5RP41

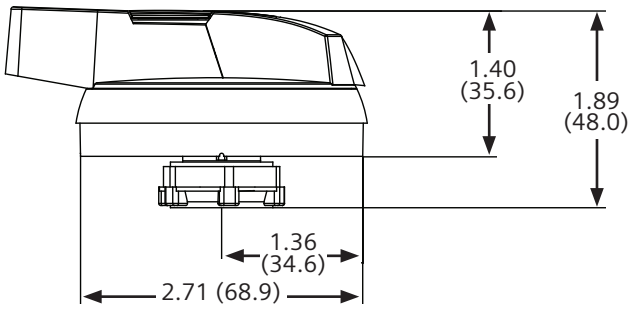

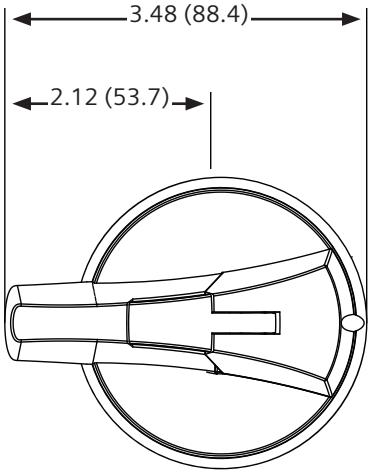

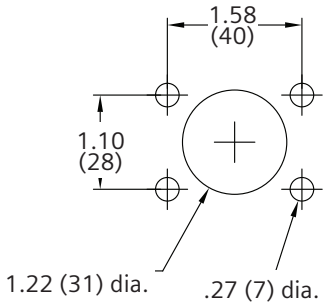

Door drilling

Heavy duty handles:

CFSH10B12N	CFSH10BL12N	CFSH12BL12
CFSH10R12N	CFSH10RL12N	CFSH12RL12
CFSH10B4N	CFSH10BL4N	CFSH12BL4
CFSH10R4N	CFSH10RL4N	CFSH12RL4

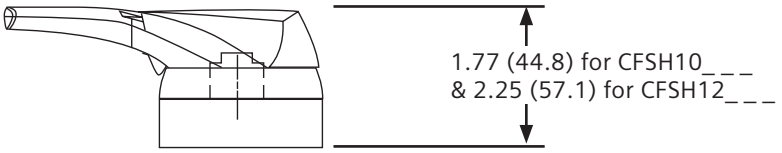

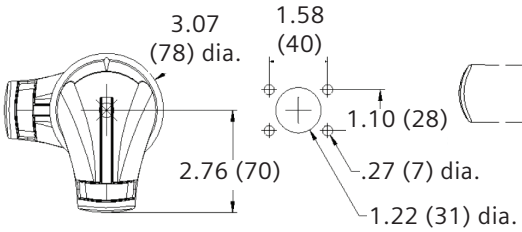

Door drilling - typical

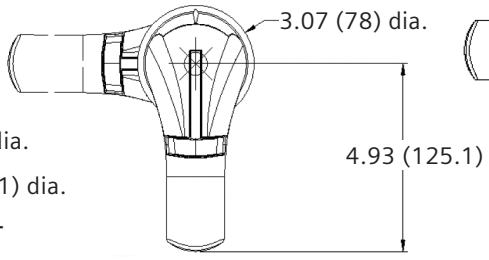

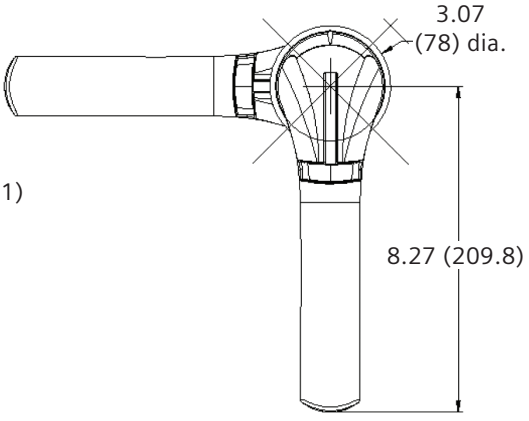

Published by
Siemens 2019

Siemens Industry, Inc.
5400 Triangle Parkway
Norcross, GA 30092

Siemens Technical Support: 1-800-333-7421
info.us@siemens.com

Printed in USA-CP
Order No. SSBR-03000-1119
All Rights Reserved
© 2019, Siemens Industry, Inc.
usa.siemens.com/switches

The technical data presented in this document is based on an actual case or on as-designed parameters, and therefore should not be relied upon for any specific application and does not constitute a performance guarantee for any projects. Actual results are dependent on variable conditions. Accordingly, Siemens does not make representations, warranties, or assurances as to the accuracy, currency or completeness of the content contained herein. If requested, we will provide specific technical data or specifications with respect to any customer's particular applications. Our company is constantly involved in engineering and development. For that reason, we reserve the right to modify, at any time, the technology and product specifications contained herein.