SINAMICS V90/S210 new line filter for 1AC 200-240V, 18A with UL certification

SIEMENS
Ingenuity for life

	Article No.	Suitable for SINAMICS Servo converter	Line supply	Rated power (kW)	Rated current (A)	Degree of protection	Certification
Old	6SL3203-0BB21-8VA0	SINAMICS V90	1 AC 200V…240V	0.1, 0.2, 0.4, 0.75	18	IP20	CE, EAC, CSA
		SINAMICS S210					
New	6SL3203-0BB21-8VA1	SINAMICS V90	1 AC 200V…240V	0.1, 0.2, 0.4, 0.75	18	IP20	CE, **UL**, EAC, CSA
		SINAMICS S210					

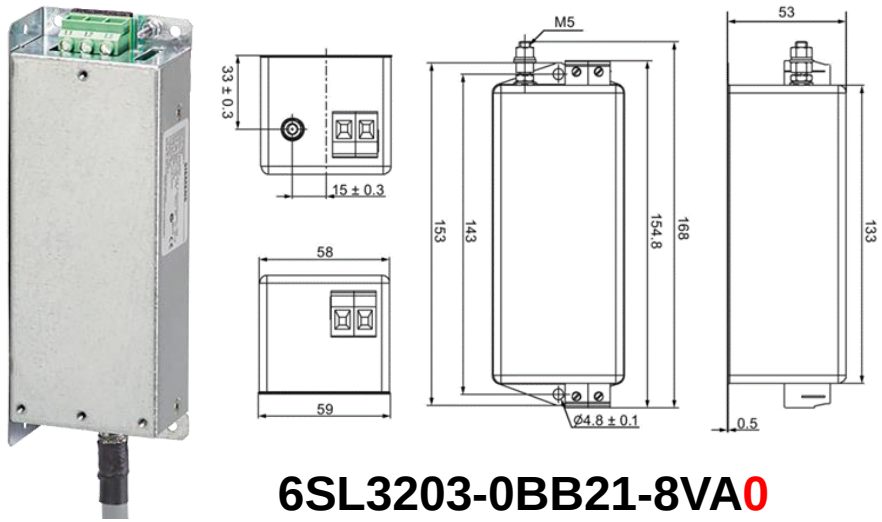

6SL3203-0BB21-8VA0

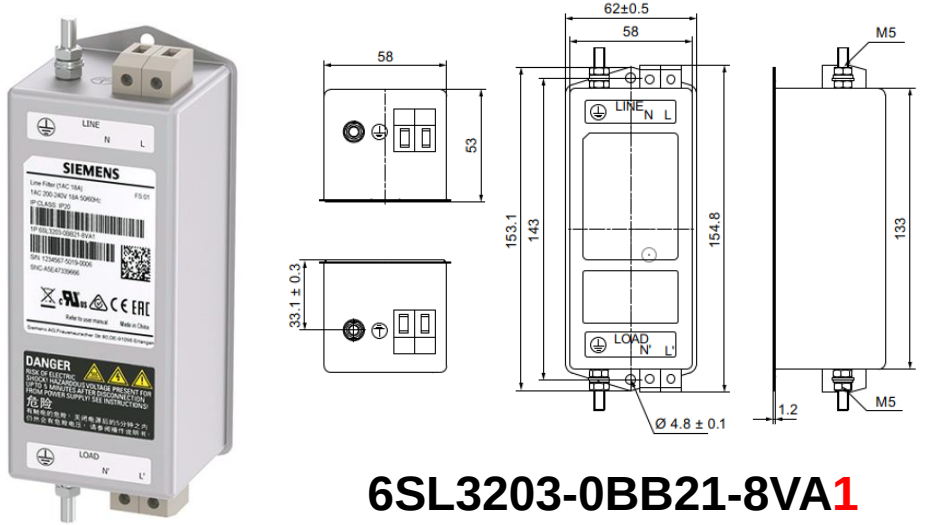

6SL3203-0BB21-8VA1

Unrestricted © Siemens AG 2021