SIEMENS

SIMATIC S5

ET 200U
Distributed I/O Station

Manual

www.datasheet.live

Edition 03

EWA 4NEB 812 6087–02b

System Overview 1

Technical Description 2

Mechanical and Electrical Configuration 3

ET 200U(DP Siemens): Address Assignment, Starting Up, Diagnosing Faults 4

ET 200U(DP Standard): Address Assignment, Starting Up, Diagnosing Faults 5

ET 200U(DP Standard/FMS): Modes, Settings and Comm. Cap. of the IM 318–C 6

Analog Value Processing 7

Module Spectrum 8

Function Modules 9

Safety–Related Guidelines A

Glossary B

SIMATIC® and SINEC® are registered trade marks of Siemens AG.

Safety–related Guidelines

This manual contains notices intended to ensure personal safety, as well as to protect the products and connected equipment against damage. These notices are highlighted by the symbols shown below and graded according to severity by the following texts:



Danger

indicates that death, severe personal injury or substantial property damage **will** result if proper precautions are not taken.



Warning

indicates that death, severe personal injury, or substantial property damage **can** result if proper precautions are not taken.



Caution

indicates that minor personal injury or property damage can result if proper precautions are not taken.

Note

contains important information about the product, its operation or a part of the document to which special attention is draw.

Qualified Personnel

A device/system may only be commissioned or operated by **qualified personnel**. Qualified personnel as referred to in safety guidelines in this document are persons authorized to energize, de–energize, clear, ground, and tag circuits, equipment and systems in accordance with established safety practice.

For a detailed description of the safety–related guidelines, please refer to the Appendix.

Proper Usage

Please observe the following:



Warning

The equipment/system or the system components may only be used for the applications described in the catalog or the technical description, and only in combination with the equipment, components, and devices of other manufacturers as far as this is recommended or permitted by Siemens.

The product will function correctly and safely only it it is transported, stored, set up, and installed as intended, and operated and maintained with care.

Exclusion of Liability

We have checked the contents of this manual for agreement with the hardware and software described. Since deviations cannot be precluded entirely, we cannot guarantee full agreement. However, the data in this manual are reviewed regularly and any necessary corrections included in subsequent editions. Suggestions for improvement are welcomed.

Technical data subject to change.

Copyright

Copyright © Siemens AG 1993 All Rights Reserved

The reproduction, transmission or use of this document or its contents is not permitted without express written authority. Offenders will be liable for damages. All rights, including rights created by patent grant or registration of a utility model or design, are reserved.

Preface

The ET 200U distributed I/O station belongs to the ET 200 distributed I/O system with the SINEC L2–DP field bus.

Available Bus Protocols

The distributed I/O station operates with the DP Siemens, DP Standard and FMS protocols.

The DP Siemens bus protocol has been developed by Siemens especially for the ET 200 distributed I/O system.

The DP standard bus protocol, a further development of DP Siemens, complies with the PROFIBUS–DP draft standard (DIN 19245, Part 3), the PROFIBUS solution for high–speed field applications.

FMS is the PROFIBUS bus protocol described in DIN 19245, Part 2.

Prerequisites

This manual is based on the “ET 200 Distributed I/O System” Manual.

Scope of this Manual

The manual is structured as follows:

What is ET 200U?	Chapter 1
Which control and display elements does the ET 200U have?	Chapter 2
How is the ET 200U installed?	Chapter 3
How is the ET 200U (**DP Siemens**) started up with COM ET 200?	Chapter 4
How is the ET 200U (**DP Standard**) started up with COM ET 200?	Chapter 5
ET 200U (**DP Standard/FMS**): How is an IM 318–C operated?	Chapter 6
Analog value processing	Chapter 7
Technical specifications + list of I/O modules	Chapters 8 + 9

Contents of this Manual

This manual describes the IM 318–B slave interface module with order numbers:

- 6ES5 318–8MB**11**
- 6ES5 318–8MB**12**
- 6ES5 318–8M**C11**

”318–8MB11”

An interface for SINEC L2–DP with DP Siemens protocol is integrated in the “318–8MB**11**”.

Note

The “318–8MB**11**” module is operated in conjunction with
- COM ET 200 (from version 1.0) and
- IM 308–B (from revision level 1)

”318–8MB12”

The functionality of the “318–8MB**11**” module is a subset of the functions of the “318–8MB**12**”.

Additionally, the “318–8MB**12**” operates in accordance with the PROFIBUS–DP (DIN 19245/Part 3) draft standard, in the following referred to as DP Standard.

The draft standard will be explained in detail in Section 1.3.

Note

A “318–8MB**12**” module can be operated as DP Standard slave (ET 200U(DP Standard) in conjunction with
- COM ET 200 (from version 4.0) and
- IM 308–B from revision level 5 (printed on module) or software version 4.0 (indicated in COM ET 200).

“318–8MC11”

An interface for SINEC L2–DP (DP Standard) and SINEC L2–FMS is integrated in the “318–8M**C11**”.
The “318–8M**C11**” can be addressed via the same bus both with the DP Standard and FMS protocols.

Note

An “318–8M**C11**” can be operated as DP Standard slave in conjunction with
- COM ET 200 (from version 4.0) and
- IM 308–B from revision level 5 (printed on module) or from software version 4.0 (indicated in COM ET 200).

A “318–8M**C11**” module can be operated as an FMS slave on any bus type conforming to the PROFIBUS DIN 19245 standard, Parts 1 and 2.

If the DP and FMS protocols are used on the bus at the same time, a maximum of two DP masters, one FMS master (additional active station) and one programmer are permitted.

Notes for Conversion from “8MB11” to “8MB12”

In the following table, the differences between the 6ES5 318–8MB**12** and the 6ES5 318–8MB**11** modules are listed.

Table 1-1 Differences between the IM 318–B slave interface modules

Difference	Described in ...
Pulling and plugging–in of I/O modules under load voltage is only permitted under defined conditions.	Chapter 3
Depending on whether the “DP Siemens” or the “DP Standard” protocol is used, COM ET 200 requires different address identifiers for the modules.	Table 4-1, Section 4.1.1 and Table 5-1, Section 5.1.1
Different functions of switch 8 (SLOW mode).	Section 4.2.1 and Section 5.2.1
Different behaviour when exiting from the SYSTEM START–UP/ TEST: MODULE SELECTION screen.	Section 4.2 and Section 5.2
Different COM ET 200 screens for: • SYSTEM START–UP/TEST • DIAGNOSTICS	 Section 4.2 and Section 5.2 Section 4.3 and Section 5.3
The three ET 200U interface modules have different manufacturer identifications.	Section 4.3.3 and Section 5.3.3
Extended diagnostics messages for the station status.	Section 5.3.3
Using COM ET 200, the “422–8MA11” digital input module can now also be entered as 16–channel input module or as 1–channel analog input module.	Table 5-1, Section 5.1.1
Individual input of address IDs.	Section 5.1

Conventions

This manual is organized in menu form to make it easier for you to find information. This means the following:

- At the front of the manual is an **overview page** that lists the title of each chapter. Following this page you will find a **table of contents**.
- The individual chapters are marked with **printed tabs**.
- At the beginning of each chapter is a **table of contents** for that chapter.
- Each **chapter** has **three level** headings that are numbered.
- **Pages, figures, and tables** are **numbered** separately for each chapter. Following the table of contents you will find a list of the figures and tables.

This manual employs specific structuring devices which will be explained to you in the following.

- Important information is marked specifically:



Warning

You will find the definitions for the terms “Danger”, “Warning” and “Caution” in the “Safety–Related Guidelines” on the page following the front page.

- **Footnotes** are marked with a raised number (e.g. [1]) or a raised asterisk [(*)]. You will find the corresponding explanations in the lower margin of the page.

  Enumerations are marked with a black point (•) (as, for example, in this list) or with a dash (–).

  Instructions are numbered (e.g. “1”).

- **Cross–references** are indicated in the following way: “(see Section 7.3.2)” refers to Section 7.3.2.
- **Dimensions** in drawings are indicated in “mm”.
- **Value ranges** are indicated as follows: 17 to 21

You will find correction sheets at the end of the manual. Use them to indicate any corrections or suggestions for improvement you might have. Send these suggestions to us. They will help us to improve the next edition of the system manual.

Contents

1 System Overview 1-1

1.1 What is ET 200? 1-2

1.2 What is ET 200U? 1-3
Components 1-3
Characteristics 1-3

1.3 What is DP Siemens and DP Standard? 1-4
What is DP Siemens and DP Standard? 1-4
Differences between DP Siemens and DP Standard 1-4
What Does DIN 19245 Have to Offer? 1-4
What is FMS? 1-5
Definition 1-5

2 Technical Description 2-1

2.1 Design of the ET 200U Interface Module 2-2

2.2 Technical Specifications 2-4
Spectrum of I/O Modules 2-4

3 Mechanical and Electrical Configuration 3-1

3.1 Mechanical Configuration of the ET 200U Distributed I/O Station 3-2
Installation, Dismantling 3-2
Installing One Tier 3-3
Installing PS 931 Power Supply Module 3-4
Installing PS 935 Power Supply Module 3-4
Installing Bus Units 3-5
Installing an I/O Module on a Bus Unit 3-6
Dismantling 3-7
Expanding an ET 200U Slave Station to Several Tiers 3-9
Addressing with Multi–Tier Configuration 3-11

3.2 Wiring the ET 200U Distributed I/O Station 3-12
Wiring Methods 3-12
Screw–Type Connections 3-12
Crimp Snap–In Connections 3-13
Dismantling Crimp Snap–In Contacts 3-14
Connecting a PS 931 or PS 935 Power Supply Module to the Main Power 3-15
Connecting an ET 200U Interface Module to a PS 931 or PS 935 Power Supply Module 3-15
Connecting Digital Modules 3-16
Connecting Four–Channel Digital Modules 3-16
Connecting Four–Channel Input Modules 3-17
Connecting Four–Channel Output Modules 3-18
Connecting Eight–Channel Digital Modules 3-19
Connecting Eight–Channel Input Modules 3-19

Connecting Eight–Channel Output Modules 3-20
Connecting the 482 Digital Input/Output Module 3-21

3.3 Electrical Configuration of the ET 200U Distributed I/O Station 3-23
Power Supply 3-23
General Electrical Configuration of an ET 200U Slave Station 3-23
Grounded Configuration 3-26
Ungrounded Configuration 3-27
Voltage Potentials in Floating/Nonfloating Configurations 3-28
Nonfloating Configuration 3-28
Floating Configuration 3-30

4 ET 200U(DP Siemens): Address Assignment, Starting Up and Diagnosing Faults Using COM ET 200 4-1
Prerequisites for this Chapter 4-1
In this Chapter 4-1
For Reference 4-1
What is DP Siemens? 4-2
Requirements for Operation 4-2

4.1 Assigning Addresses Using COM ET 200 4-3
In this Section 4-3

4.1.1 Using the CONFIGURING Screen for ET 200U(DP Siemens) 4-4
“Station Number” 4-5
“Area” 4-6
“Station Type” 4-6
“Next Available Address” 4-7
Special Address Assignment Conditions 4-7
Condition 1 4-8
Condition 2 4-8
Example Division of the Digital/Analog I/O Areas 4-8
Configuring 4-9
DP Siemens Address ID 4-9
Finish Configuration 4-14

4.1.2 How to Proceed if the Configuration is Modified at a Later Point 4-15
Expanding the Slave Station at a Later Point 4-15
Expanding an Already Configured Slave Station 4-15
Modifying an Already Configured Slave Station 4-16

4.2 Starting Up and Testing with COM ET 200 for ET 200U(DP Siemens) . . . 4-17
In this Section 4-17

4.2.1 Setting the Station No. and Switch 8 4-18
Setting the Station Number 4-18
Setting Switch 8 4-19

4.2.2 Starting Up an ET 200U Slave Station 4-20

4.2.3 Using the SYSTEM START–UP/TEST Screen for an ET 200U(DP Siemens) Slave Station 4-21
STATUS/FORCE Function 4-23
STATUS Function 4-23
FORCE Function 4-23
FORCE with Load Circuit 4-23

4.3 Diagnosing Faults for ET 200U(DP Siemens) 4-25
In this Section 4-25

4.3.1 Using LEDs to Diagnose Problems 4-26

4.3.2 Using COM ET 200 to Diagnose Problems 4-27

4.3.3 Diagnosing Faults with STEP 5 (Station Diagnostics) 4-29
General Remarks on Diagnostics 4-29
Special Features of Requesting Diagnostics Using Page Addressing . . . 4-29
Structure and Request of Station Diagnostics for ET 200U 4-30
Request Station Status 4-31
Read Station Status 4-31
Request Manufacturer Identification 4-33
Request Station Diagnostics 4-34
Read Station Diagnostics 4-34
Request Module Diagnostics 4-35
Read Module Diagnostics 4-35

5 ET 200U(DP Standard): Address Assignment, Starting UP and Diagnosing Faults Using COM ET 200 5-1
Prerequisites for this Chapter 5-1
In this Chapter 5-1
For Reference 5-1
What is DP Standard? 5-2
Requirements for Operation 5-2

5.1 Assigning Addresses Using COM ET 200 5-3
In this Section 5-3
Copying the Type File 5–3

5.1.1 Using the CONFIGURING Screen for ET 200U(DP Standard) 5-4
“Station Number” 5-5
“Area” 5-6
“Station Type” 5-6
“Next Available Address” 5-7
Special Address Assignment Conditions 5-7
Condition 1 5-8
Condition 2 5-8
Example Division of the Digital/Analog I/O Areas 5-8
Configuring 5-9
DP Standard Address ID 5-9
Help for Input of Unknown Address IDs 5-14
Defining Parameters 5-15
Finish Configuration 5-17

5.1.2 How to Proceed if the Configuration is Modified at a Later Point 5-18
Expanding the Slave Station at a Later Point 5-18
Expanding an Already Configured Slave Station 5-18

Modifying an Already Configured Slave Station 5-19

5.2 Starting Up and Testing with COM ET 200 for ET 200U(DP Standard) . . 5-20
In this Section 5-20

5.2.1 Setting the Station No. and Switch 8 5-21
Setting the Station Number 5-21
Setting Switch 8 5-22
Example of an “318–8MB12” 5–22

5.2.2 Starting Up an ET 200U Slave Station 5-23

5.2.3 Using the SYSTEM START–UP/TEST Screen for an ET 200U(DP Standard) Slave Station 5-24
Diagnostics Messages in the “...:STATUS/FORCE” Screen 5-25
STATUS/FORCE Function 5-26
STATUS Function 5-26
FORCE Function 5-26
FORCE with Load Circuit 5-27

5.3 Diagnosing Faults for ET 200U(DP Standard) 5-28
In this Section 5-28

5.3.1 Using LEDs to Diagnose Problems 5-29

5.3.2 Using COM ET 200 to Diagnose Problems 5-30

5.3.3 Diagnosing Faults with STEP 5 (Station Diagnostics) 5-32
General Remarks on Diagnostics 5-32
Special Features of Requesting Diagnostics Using Page Addressing . . . 5-32
Structure and Request of Station Diagnostics for ET 200U 5-33
Request Station Status 5-34
Read Station Status 5-34
Request Manufacturer Identification 5-36
Request Station Diagnostics 5-37
Read Station Diagnostics 5-37
Request Module Diagnostics 5-38
Read Module Diagnostics 5-38

6 ET 200U(DP Standard/FMS): Modes, Settings and Communications Capabilities of the IM 318–C 6-1
In this Chapter 6-1
For Reference 6-1
Prerequisites for this Chapter 6-1

6.1 Modes of the IM 318–C 6-2
What is an IM 318–C? 6-2
Which Modes are Possible? 6-2
Requirements for Operating an IM 318–C 6-5
Differences 6-6

6.2 Settings of the IM 318–C 6-8
Setting the Station Number and Switch 8 6-8

6.3 ET 200U(DP Standard/FMS) Communicating in Accordance with PROFIBUS Standard (Part 2) 6-10

6.3.1 FMS Services 6-11
Initiate 6-11

Abort 6-11
Reject 6-11
Identify 6-12
Get–OV 6-12
Status 6-12
Read 6-12
Write 6-12
Event–Notification 6-12
Acknowledge–Event–Notification 6-12
Alter–Event–Condition–Monitoring 6-12

6.3.2 Object List (OV) 6-13
Static Object List 6-13
Slot 6-14
Diagnostics Data 6-19
Parameter Data 6-25
DP Inputs 6-27
FMS Inputs 6-27
DP Outputs 6-28
FMS Outputs 6-28
Diagnostics Event (with “Event–Notification”) 6-29

6.3.3 List of Communications Links (KBL) 6-30
KR 6-33
Type 6-33
ATTR 6-33
Local LSAP 6-33
RSAP 6-33
RADR 6-33
SCC 6-33
RCC 6-33
SAC 6-33
RAC 6-33
ACI, CCI 6-34
Max. PDU Size 6-34
Features Supported 6-34

6.4 Using LEDs to Diagnose Problems 6-35

6.5 Example of Programming a Link between an ET 200U(FMS) and a CP 5431 FMS 6-36

6.5.1 Programming a Cyclic Link (MSZY) 6-37

6.5.2 Programming an Acyclic Link (MSAZ) 6-39

7 Analog Value Processing 7-1

7.1 Analog Input Modules 7-2

7.2 Connecting Current and Voltage Sensors to Analog Input Modules 7-3
Voltage Measurement with Isolated / Non–Isolated Thermocouples 7-3
Connection of Thermocouples with Compensa–ting Box to Module 464–8MA11/8MA21 7-5
Two–Wire Connection of Voltage Sensors 7-5
Two–Wire Connection of Current Sensors 7-6
Connection of Two–Wire Transducers 7-7

Connection of Four–Wire Transducers 7-8
Wiring of the Terminal Block 7-8
More than Two Four–Wire Transducer Connections 7-8
No Wire Break Detection with 6ES5 464–8ME11 7-8
Connection of Resistance Thermometers 7-9

7.3 Start–Up of Analog Input Modules 7-11

7.4 Analog Value Representation of Analog Input Modules 7-16

7.5 Analog Output Modules 7-25
Connection of Loads to Analog Output Modules 7-25
Analog Value Representation of Analog Output Modules 7-27

8 Module Spectrum 8-1

8.1 General Technical Specifications 8-2

8.2 IM 318–B Interface Module (6ES5 318–8MB11) (6ES5 318–8MB12) (6ES5 318–8MC11) 8-3

8.3 Power Supply Modules 8-7

8.4 Bus Units 8-12

8.5 Interface Modules 8-14

8.6 Digital Input Modules 8-16

8.7 Digital Output Modules 8-26

8.8 Digital Input / Output Modules 8-39

8.9 Analog Input Modules 8-41

8.10 Analog Output Modules 8-59

9 Function Modules 9-1

9.1 Comparator Module 2 x 0.5 to 20 mA / 0.5 to 10 V (6ES5 461–8MA11) 9-2
Function 9-3
Installation 9-3
Wiring 9-3
Addressing 9-3
Typical Application 9-4

9.2 Timer Module 2 x 0.3 to 300 s (6ES5 380–8MA11) 9-5
Function 9-6
Installation 9-6
Wiring 9-6
Addressing 9-6
Typical Application as On–Delay Timer 9-7

9.3 Simulator Module (6ES5 788–8MA11) 9-8
Function 9-9
Installation 9-9
Wiring 9-9
Addressing 9-9
Typical Application 9-9

9.4	Diagnostic Module (6ES5 330–8MA11)	9-10
	Function	9-11
	Installation	9-12
	Wiring	9-12
	Addressing	9-12
9.5	Counter Module 2 x 0 to 500 Hz (6ES5 385–8MA11)	9-13
	Function	9-15
	Installation	9-15
	Wiring	9-15
	Addressing	9-15
	Timing Diagram	9-16
	Typical Application	9-17
9.6	Counter Module 25/500 kHz (6ES5 385–8MB11)	9-18
	Function	9-20
	Installation	9-21
	Functional Description of the COUNTER Mode	9-28
	Functional Description of the Position Decoder	9-31
	Settings	9-31
	Entering New Setpoints for the Counter and Position Decoder	9-40
	Addressing	9-42
9.7	Closed–Loop Control Module IP 262 (6ES5 262–8MA12) (6ES5 262–8MB12)	9-44
	Function	9-46
	Modules	9-46
	Installation	9-46
	Addressing	9-47
	Operating Modes	9-47
9.8	IP 263 Positioning Module (6ES5 263–8MA11)	9-48
	Assignments of Outputs	9-50
	Positioning	9-50
9.9	IP 264 Electronic Cam Controller Module (6ES5 264–8MA11)	9-52
	Dead Time Compensation	9-54
	Direct Process Connection	9-54
9.10	IP 265 High Speed Sub Control (6ES5 265–8MA01)	9-55
	Function	9-57
	Installation	9-57
	Addressing	9-57
9.11	IP 266 Positioning Module (6ES5 266–8MA11)	9-58
	Operation Principle	9-60
	Operating Modes	9-60
	Positioning	9-61
	Operating Modes	9-62
	Installation	9-62
9.12	IP 267 Stepper Motor Control Module (6ES5 267–8MA11)	9-63
	Operation Principle of the IP 267	9-64
	LEDs	9-65
	Installation	9-65
	Restriction	9-65

9.13 CP 521 BASIC Communications Module (6ES5 521–8MB11) 9-66
Function 9-67
Installation 9-67
Addressing 9-67

9.14 CP 521 SI Communications Processor (6ES5 521–8MA21) 9-68
Function 9-69
Unidirectional Data Exchange 9-69
Bidirectional Data Exchange 9-69
Integrated Real–Time Clock 9-70
Installation 9-70
Addressing 9-70

A Safety–Related Guidelines A-1

A.1 Active and Passive Faults in Automation Equipment A-2
Procedures for Maintenance and Repair A-2

A.2 Suggestions for Configuring and Installing a Programmable Controller . . A-3

B Glossary B-1

Figures

1-1	Component of the ET 200 Distributed I/O System Described in this Manual	1-2
2-1	Design of the ET 200U Interface Module	2-3
3-1	Installation on a Standard Mounting Rail	3-4
3-2	Connecting the Bus Units	3-5
3-3	System to Prevent Plugging In the Wrong Module	3-6
3-4	Removing an ET 200U Interface Module from a Rail	3-7
3-5	Removing Bus Units from a Standard Mounting Rail	3-8
3-6	Multi–Tier Configuration in a Cabinet Using IM 316 Interface Modules	3-10
3-7	Multi–Tier Configuration with a Row of Devices	3-10
3-8	Numbering with Multi–tier Configuration	3-11
3-9	Screw–Type Connection	3-12
3-10	Inserting Crimp Snap–In Contacts	3-13
3-11	Dismantling Crimp Snap–In Contacts	3-14
3-12	Connecting a Power Supply Module to the Mains	3-15
3-13	Two–Wire Connection of a Sensor to Channel 2	3-17
3-14	Two–Wire Connection of a Lamp to Channel 2	3-18
3-15	Connecting a Sensor to Channel 4	3-19
3-16	Connecting a Lamp to Channel 6	3-20
3-17	Connecting a Sensor and Load to the 482 Digital I/O Module	3-22
3-18	Configuration with a 115 V AC/230 V AC Power Supply for an ET 200U Interface Module, Sensors, and Actuators	3-25
3-19	Grounded Configuration with a 24 V DC Power Supply for an ET 200U Interface Module, Sensors, and Actuators (Safe Electrical Isolation According to VDE 0160)	3-26
3-20	Ungrounded Configuration with a 24 V DC Power Supply for an ET 200U Interface Module	3-27
3-21	Simplified Illustration of a Configuration with Nonfloating I/O Modules	3-29
3-22	Simplified Illustration of a Configuration with Floating I/O Modules	3-31
4-1	ET 200U(DP Siemens): CONFIGURING Screen (1)	4-4
4-2	ET 200U(DP Siemens): CONFIGURING screen (2)	4-5
4-3	ET 200U(DP Siemens): CONFIGURING Screen (3)	4-6
4-4	Example of Process I/O Image with ET 200	4-7
4-5	Location of the Bank of Switches for Setting the Station Number	4-18
4-6	SYSTEM START–UP/TEST: MODULE SELECTION Screen	4-21
4-7	SYSTEM START–UP/TEST: STATUS/CONTROL Screen	4-22
4-8	Fault LEDs on the IM 318–B Interface Module	4-26
4-9	DIAGNOSTICS: OVERVIEW screen	4-27
4-10	INDIVIDUAL DIAGNOSTICS Screen	4-28
4-11	Structure of the Diagnostics Word after Request of the Station Status (Station Status 1 and Station Status 2)	4-32
4-12	Structure of the Diagnost. Word after Request of the Station Status (Station Status 3 and Master Address)	4-32
4-13	Structure of the Diagnostics Word after Request of the Manufacturer Identification	4-33
4-14	Structure of the Diagnostics Word after Request of Station Diagnostics	4-34
4-15	Structure of the Diagnostics Word after Request of Module Diagnostics (Header and Slots 0 to 7)	4-35
4-16	Structure of the Diagnostics Word after Request of Module Diagnostics (Slots 8 to 15 and 16 to 23)	4-36

4-17	Structure of the Diagnostics Word after Request of Module Diagnostics (Slots 24 to 31)	4-36
5-1	ET 200U(DP Standard): CONFIGURING Screen (1)	5-4
5-2	ET 200U(DP Standard): CONFIGURING screen (2)	5-5
5-3	ET 200U(DP Standard): CONFIGURING Screen (3)	5-6
5-4	Example of Process I/O Image with ET 200	5-7
5-5	Structure of Parameterization Frame	5-16
5-6	Location of the Bank of Switches for Setting the Station Number	5-21
5-7	SYSTEM START–UP/TEST: MODULE SELECTION Screen	5-24
5-8	SYSTEM START–UP/TEST: STATUS/CONTROL Screen	5-25
5-9	Fault LEDs on the ET 200U Interface Module	5-29
5-10	DIAGNOSTICS: OVERVIEW Screen	5-30
5-11	INDIVIDUAL DIAGNOSTICS Screen	5-31
5-12	Structure of the Diagnostics Word after Request of the Station Status (Station Status 1 and Station Status 2)	5-35
5-13	Structure of the Diagnost. Word after Request of the Station Status (Station Status 3 and Master Address)	5-35
5-14	Structure of the Diagnostics Word after Request of the Manufacturer Identification	5-36
5-15	Structure of the Diagnostics Word after Request of Station Diagnostics	5-37
5-16	Structure of the Diagnostics Word after Request of Module Diagnostics (Header and Slots 0 to 7)	5-38
5-17	Structure of the Diagnostics Word after Request of Module Diagnostics (Slots 8 to 15 and 16 to 23)	5-39
5-18	Structure of the Diagnostics Word after Request of Module Diagnostics (Slots 24 to 31)	5-39
6-1	Location of the Bank of Switches for Setting the Station Number	6-9
6-2	FMS Services Supported by the ET 200U(DP Standard/FMS)	6-11
6-3	Fault LEDs on the ET 200U Interface Module	6-35
6-4	“Input/Output (I/O) Areas” Screen	6-37
6-5	“CI Editor” Screen	6-38
6-6	“CP Link Programming” Screen	6-39
6-7	“Request Editor Initialisation “ Screen	6-40
6-8	“Request Editor Service Selection” Screen	6-41
6-9	“Request Editor” Screen	6-42
7-1	Voltage Measuring with Isolated Thermocouples (6ES5 464–8MA11/8MA21)	7-4
7-2	Voltage Measuring with Non–Isolated Thermocouples (6ES5 464–8MA11/8MA21)	7-4
7-3	Two–Wire Connection of Voltage Sensors (6ES5 464–8MB11, 464–8MC11, 466–8MC11)	7-5
7-4	Two–Wire Connection of Current Sensors (6ES5 464–8MD11)	7-6
7-5	Connection of Two–Wire Transducers (6ES5 464–8ME11)	7-7
7-6	Connection of Four–Wire Transducers (6ES5 464–8ME11)	7-8
7-7	Wiring Method for PT 100 (6ES5 464–8MF11/8MF21)	7-9
7-8	Wiring Possibilities for Input Modules (6ES5 464–8MF11)	7-10
7-9	Load Connection via a Four–Wire Circuit (6ES5 470–8MA11, 6ES5 470–8MD11)	7-26
7-10	Connection via a Two–Wire Circuit (6ES5 470–8MB11, 6ES5 470–8MC11)	7-27

9-1	Scanning the Comparator Module	9-3
9-2	Scanning the Timer Module	9-6
9-3	Scanning the Simulator Module as a Digital Input	9-9
9-4	Setting the Input Voltage Range on the Counter Module (500 Hz)	9-15
9-5	Scanning the Counter Module (500 Hz)	9-16
9-6	Timing Diagram: Setting and Resetting an Output of the Counter Module (500 Hz)	9-16
9-7	Switch Positions on the Operating Mode Switch of the Counter Module	9-20
9-8	Pin Assignment of the 15–Pin Sub–D Female Connector of the Counter Module	9-21
9-9	Connecting a Counting Pulse Sensor for 5 V Differential Signal to RS 422	9-22
9-10	Connecting a Counting Pulse Sensor for 24 V DC	9-22
9-11	Connecting a 5 V Position Sensor to RS 422A	9-23
9-12	Connecting a 24 V DC Position Sensor	9-23
9-13	Signal Sequence for Up–Counting	9-24
9-14	Assignment Diagram for the Terminal Block	9-25
9-15	Diagnostics Byte	9-27
9-16	Switching the Outputs Dependent on the Status of the Counter and the Enable Input	9-30
9-17	Position of the Reference Point (SYNC Bit 0=1) within the Reference Signal Range	9-34
9-18	Position of the Reference Point (SYNC Bit=1) after the Reference Signal	9-34
9-19	Position of the Reference Point (SYNC Bit=1) during a Reversal of Direction before Reaching the Reference Pulse in a Positive Direction	9-34
9-20	Schematic of a Reference Point Approach Operation	9-35
9-21	Enabling the Outputs – Reaching the Setpoints – Resetting the Outputs	9-36
9-22	Approaching a Setpoint in Up–Count Direction	9-38
9-23	Approaching a Setpoint in Down–Count Direction	9-38
9-24	Approaching a Setpoint in Up–Count Direction and Subsequent Reversal of Direction	9-39
9-25	Requirement for New Setpoint	9-41
9-26	Positioning with the IP 263	9-51
9-27	Course of a Following Error during a Positioning Operation	9-61
9-28	Velocity Profile of IP 267	9-64

Tables

3-1	Installing, Dismantling and Replacing the Hardware of an ET 200 Station	3-2
3-2	Connecting the Load Voltage to the Terminal Block of a Bus Unit	3-16
3-3	Terminal Assignment of the Front Connector of the 482 Digital I/O Module	3-21
4-1	Address IDs for the Modules in an ET 200U(DP Siemens) Station	4-10
4-2	Address IDs for the Modules in an ET 200U(DP Siemens)	4-11
4-3	Address IDs for the Modules in an ET 200U(DP Siemens)	4-12
4-4	Address IDs for the Modules in an ET 200U(DP Siemens)	4-13
4-5	Function of Switch 8	4-19
4-6	Resetting Outputs with Load Circuit Turned on	4-24
4-7	LED Fault Messages from IM 318–B	4-26
4-8	Diagnostics with STEP 5	4-29
4-9	Structure of Station Diagnostics and Module Diagnostics	4-30
5-1	Names of the Type Files for the ET 200U	5-10
5-2	Address IDs for the Modules in an ET 200U(DP Standard) Station	5-10
5-3	Address IDs for the Modules in an ET 200U(DP Standard) Station	5-11
5-4	Address IDs for the Modules in an ET 200U(DP Standard) Station	5-12
5-5	Address IDs for the Modules in an ET 200U(DP Standard)	5-13
5-6	Explanation of Parameters in the DP–IDENTIFIER Field	5-14
5-7	Meaning of the Parameters in the Parameterization Frame	5-16
5-8	Function of Switch 8	5-22
5-9	Resetting Outputs with Load Circuit Turned On	5-27
5-10	LED Fault Messages on ET 200U Interface Module	5-29
5-11	Diagnostics with STEP 5	5-32
5-12	Structure of Station Diagnostics and Module Diagnostics	5-33
6-1	Modes of the M 318–C	6-4
6-2	Requirements for Operating an IM 318–C	6-5
6-3	Bus Parameters to be Set if at Least One FMS Master is on the Bus	6-5
6-4	Differences between the Various Modes of the IM 318–C	6-6
6-5	Setting the Station Number and Switch 8	6-8
6-6	Structure of the Object List of the ET 200U(DP Standard/FMS)	6-13
6-7	“Input” or “Output” Object of the “Simple–Variable” Type	6-14
6-8	“Input” or “Output” Object of the “Array” Type	6-14
6-9	Coding the I/O Modules in an ET 200U(DP Standard/FMS)	6-15
6-10	Coding the I/O Modules in an ET 200U(DP Standard/FMS)	6-16
6-11	Coding the I/O Modules in an ET 200U(DP Standard/FMS)	6-17
6-12	Coding the I/O Modules in an ET 200U(DP Standard/FMS)	6-18
6-13	“Diagnostics Data” Object	6-19
6-14	Structure of the Diagnostics Messages of the ET 200U(DP Standard/FMS)	6-19
6-15	Meaning of Station Status 1	6-20
6-16	Meaning of Station Status 2	6-21
6-17	Meaning of the “Station Diagnostics” Header	6-22
6-18	Information Content of Station Diagnostics	6-22
6-19	Meaning of the “Module Diagnostics” Header	6-23
6-20	Information Content of Module Diagnostics (Slots 0 to 7)	6-23
6-21	Information Content of Module Diagnostics (Slots 8 to 15)	6-24
6-22	Information Content of Module Diagnostics (Slots 16 to 23)	6-24
6-23	Information Content of Module Diagnostics (Slots 24 to 31)	6-24
6-24	“Parameter Data” Object	6-25

6-25	Meanings of the Parameter Data	6-26
6-26	“DP Inputs” Object	6-27
6-27	“FMS Inputs” Object	6-27
6-28	“DP Outputs” Object	6-28
6-29	“FMS Outputs” Object	6-28
6-30	“Diagnostics Event” Object	6-29
6-31	Master–Slave, Cyclic, Read	6-30
6-32	Master–Slave, Cyclic, Write	6-30
6-33	Master–Slave, Cyclic, with Slave Initiation, Read	6-30
6-34	Master–Slave, Cyclic, with Slave Initiation, Write	6-31
6-35	Master–Slave, Acyclic, with Slave Initiation	6-31
6-36	Master–Slave, Acyclic	6-31
6-37	Master–Slave, Acyclic, with Event Acknowledgement for Cyclic Links	6-32
6-38	Types of Link of the ET 200U(DP Standard/FMS)	6-33
6-39	LED Fault Messages from ET 200U	6-35
7-1	Settings for the Operating Mode Switch for Analog Input Modules 464–8 to 11	7-11
7-2	Settings for the Operating Mode Switch for Analog Input Module 464–8MA21	7-12
7-3	Settings for the Operating Mode Switch for Analog Input Module 464–8MF21	7-15
7-4	Representation of an Analog Input Value as Bit Pattern	7-16
7-5	Analog Input Modules 464–8MA11, –8MF11, –8MB11 (Bipolar Fixed–Point Number)	7-17
7-6	Analog Input Modules 464–8MC11, –8MD11 (Bipolar Fixed–Point Number)	7-18
7-7	Analog Input Module 464–8ME11, 4 4 to 20 mA (Absolute Value)	7-18
7-8	Analog Input Module 464–8MF11, 2 PT 100 (Unipolar) Analog Input Module 464–8MF21, 2 PT 100 “No Linearization” (Unipolar)	7-19
7-9	Analog Input Module 464–8MF21, 2 PT 100 “with Linearization” (Bipolar), to DIN IEC 751	7-19
7-10	Analog Input Module 464–8MA21, 4 ”50 mV with Linearization and with Temperature Compensation (Bipolar); Thermoelement Type K (Nickel–Chromium/Nickel–Aluminium, according to IEC 584)	7-20
7-11	Analog Input Module 464–8MA21, 4 x ”50 mV with Linearization and with Temperature Compensation (Bipolar); Thermoelement Type J (Iron/Copper–Nickel (Konstantan) according to IEC 584)	7-21
7-12	Analog Input Module 464–8MA21, 4 x ”50 mV with Linearization and with Temperature Compensation (Bipolar); Thermoelement Type L (Iron/Copper–Nickel (Konstantan), according to 43710)	7-22
7-13	Analog Input Module 466–8MC11, 4 x 0 to 10 V	7-23
7-14	Representation of an Analog Output Value as a Bit Pattern	7-27
7-15	Output Voltages and Currents for Analog Output Modules (Fixed–Point Number Bipolar)	7-28
7-16	Output Voltages and Currents for Analog Output Modules (Unipolar)	7-28

8-1	Binary representation of the measured value	8-58
9-1	Sending Data from the Counter Modules to the CPU	9-26
9-2	Sending Data from the CPU to the Counter Module	9-26
9-3	Pulse Evaluation	9-31
9-4	Sample Traverse Range	9-32
9-5	Reaction of the Counter Module during Transfer of the Setpoints	9-40
9-6	Meaning of the Bytes of a Slot Address	9-42
9-7	Designation of the Operating Modes of the IP 266	9-62

System Overview

1

1-1 Component Described in this Manual of the ET 200 Distributed I/O System 1-2

1.1 What is ET 200? 1-2

1.2 What is ET 200U? 1-3
Components 1-3
Characteristics 1-3

1.3 What is DP Siemens and DP Standard? 1-4
What is DP Siemens and DP Standard? 1-4
Differences between DP Siemens and DP Standard 1-4
What Does DIN 19245 Have to Offer? 1-4
What is FMS? 1-5
Definition 1-5

Figures

1-1 Component of the ET 200 Distributed I/O System Described in this Manual 1-2

System Overview

1

The system overview contains information on the performance characteristics and features of the ET 200U distributed I/O station.

It also contains information on the ET 200U distributed I/O station seen as a component of the ET 200 distributed I/O system.

1.1 What is ET 200?

The ET 200 distributed I/O system is based on the PROFIBUS standard (DIN 19245, Part 1) and the PROFIBUS–DP standard draft (DIN 19245, Part 3).

The SIEMENS PROFIBUS is called SINEC L2.

The field bus which is the basis for the ET 200 distributed I/O system is a variant of the SINEC L2 with the name SINEC L2–DP (“DP” = Distributed periphery). This variant is designed for the shortest reaction times in communication with distributed I/Os.

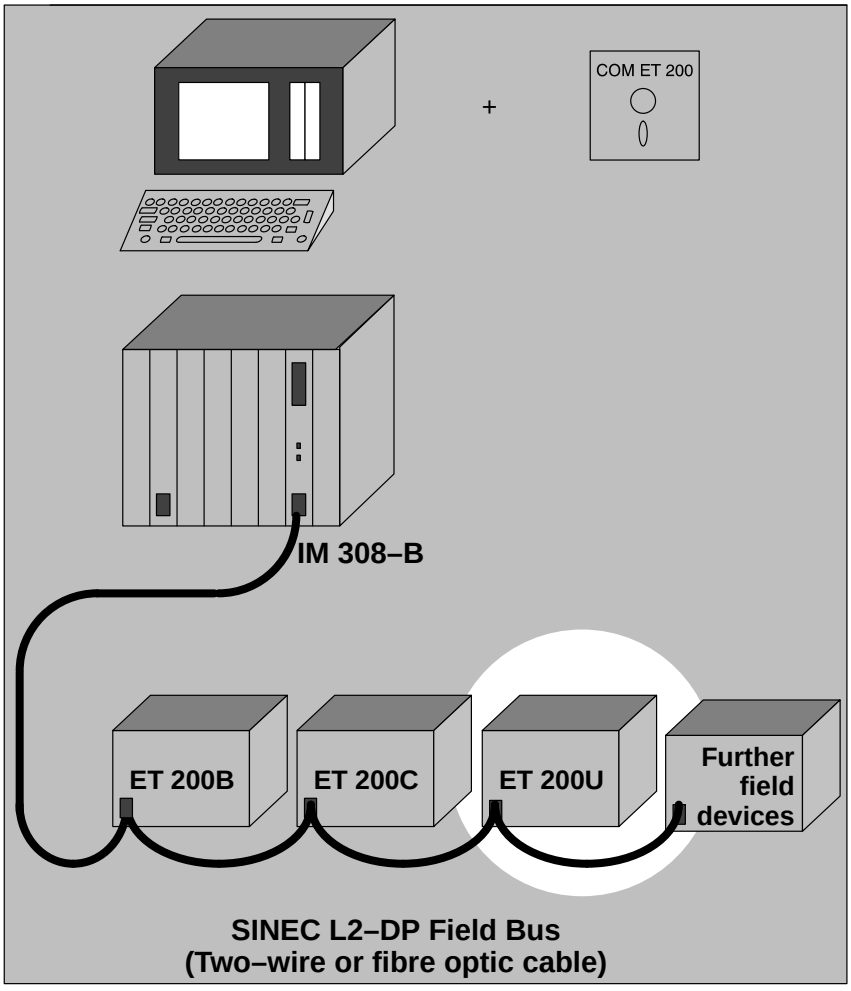

Figure 1-1 Component Described in this Manual of the ET 200 Distributed I/O System

1.2 What is the ET 200U?

Components

ET 200U is the designation for a slave station consisting of the following:

- ET 200U interface module
- Power supply
- Bus units with up to 32 modules from the S5–100U I/O module spectrum.

Characteristics

The ET 200U distributed I/O station has the following characteristics:

- IP 20 degree of protection
- Accommodation of a maximum of 32 modules from the S5–100U module spectrum (including CPs and IPs)
- Maximum address space per ET 200U distributed I/O station

  32 input bytes and 32 output bytes
- Multi–tier configuration possible using the IM 315 and IM 316 interface modules
- Direct connection of a programmer or ET 200 Handheld for testing and start–up (programmer with a CP 5410–S5DOS/ST programmer interface module)
- The station number of the ET 200U distributed I/O is switch–selectable
- The ET 200U module, Order No. 8MB1**1** is operated with DP Siemens (→ Section 1.3)
- The ET 200U module, Order No. 8MB1**2** can be operated either with DP Siemens or with DP Standard (→ Section 1.3)
- ET 200U module, Order No. 8M**C11** can be operated either with FMS or with DP Standard (→ Section 1.3)
- High data throughput:

Example

20 ET 200U distributed I/O stations with 8 input bytes and 8 output bytes (= 2560 bits of user data) are connected to the bus. The baud rate set is 1500 Kbaud:

I.e., a complete data cycle lasts 5.9 ms. During the data cycle the IM 308–B master interface module and the distributed I/Os exchange input/output data.

1.3 What is DP Siemens and DP Standard?

What is DP Siemens and DP Standard?

DP Siemens is the bus protocol developed by Siemens. In cooperation with the PROFIBUS User Organization, this bus protocol has been extended into an open, multi–vendor system. This extended bus protocol has been filed with the German Electrotechnical Commission (DKE) and it has been passed as National draft standard DIN 19245, Part 3.

In this manual, the new bus protocol is called DP Standard.

Differences between DP Siemens and DP Standard

The user interfaces of DP Siemens and DP Standard are very similar. All functions which were available with an ET 200U(DP Siemens) are also provided for an ET 200U(DP Standard).

The DIN 19245 draft standard, Part 3, offers additional advantages:

- Slave stations which meet the DIN 19245 draft standard, Part 3, can be connected to the ET 200 distributed I/O system
- Master stations which meet the DIN 19245 draft standard, Part 3, are able to communicate with the ET 200U(DP Standard) slave station

What Does DIN 19245 Have to Offer?

The PROFIBUS DIN 19245 field bus standards cover a great variety of functions, thus making the bus system suitable for universal use, from the control and cell level right up to the field level.

The ET 200 distributed I/O system is based on DIN 19245, Part 1 and supplements the definitions contained therein for the special applications in the field of distributed I/O systems.

DIN 19245, Part 1 describes the bus access and line protocol as well as the definitions for the required transmission hardware technique.

DIN 19245, Part 3 offers a solution for distributed I/O applications calling for short system response times.

The major task of DIN 19245, Part 3, is the fast cyclic data exchange between the central PLCs (master station) and the I/O units (slave station).

DIN 19245, Part 3, offers the following features:

- Transmission of 1024–bit I/O data for 32 stations in less than 10 ms.
- Extensive diagnostics
- Reduced parameterization and configuring effort

What is FMS?

At Siemens, FMS is defined as the PROFIBUS DIN 19245 bus protocol, Parts 1 and 2.

DIN 19245, Part 1, describes the bus access and transmission protocol and the conventions for the transmission hardware required. DIN 19245, Part 2, defines the application protocol and the user interface.

PROFIBUS–FMS has been developed especially for automation applications. It enables automation systems of different manufacturers to communicate with one another. PROFIBUS–FMS permits good connectivity to higher–level automation systems.

The DP protocol offers faster response times than FMS so that FMS is intended rather for applications where time is not a crucial factor.

Definition

In this manual, the following three terms are used to distinguish the different systems:

ET 200U:	Slave station with IM 318–B interface module, in general
ET 200U (DP **Siemens**):	“318–8MB11” or “318–8MB12” which uses the “DP Siemens” bus protocol just like a “318–8MB11”.
ET 200U (DP **Standard**):	“318–8MB12” or “318/8MC11” which uses the “DP Standard” bus protocol. DP Standard refers to the DIN 19245 draft standard, Part 3.
ET 200U (DP Standard/ FMS):	The “318–8MC11” uses both the “DP Standard” and “FMS” bus protocols. The ET 200U (DP Standard/FMS) can handle the sensor/actuator profile up to device class 4.

Technical Description

2

2.1 Design of the ET 200U Interface Module 2-2

2.2 Technical Specifications 2-4
Spectrum of I/O Modules 2-4

Figures

2-1 Design of the ET 200U Interface Module 2-3

Technical Description

2

The ET 200U distributed I/O station consists of the ET 200U interface module and the I/O modules.

This chapter contains a description of the controls and display elements of the ET 200U interface module.

2.1 Design of the ET 200U Interface Module

1. “RUN” LED (green)
   This LED lights up when the ET 200U interface module is in the RUN mode (STOP/RUN switch in the “RUN” position and power supply switched on)
2. “BUS–FAULT” LED (red)
3. “IM–FAULT” LED (red)
4. STOP/RUN switch
5. SINEC L2–DP interface
6. Terminals for 24 V supply and functional earth
7. Switch for setting the station number and
   - the baud rate of the I/O bus (... 8MB**11**) (→ Section 4.2.1) or
   - DP Siemens / DP Standard characteristics (... 8MB**12**) (→ Section 5.2.1) or
   - Switching from FMS to DP Standard bus parameters and vice versa (... 8M**C11**) (→ Section 6.2).
8. Field for station number labels
9. Plug connector for connection of a bus unit

The LED indications are described in detail in the following Sections:

- ET 200U(DP Standard) in Section 4.3.1,
- ET 200U(DP Standard) in Section 5.3.1,
- ET 200U(DP Standard/FMS) in Section 6.4.

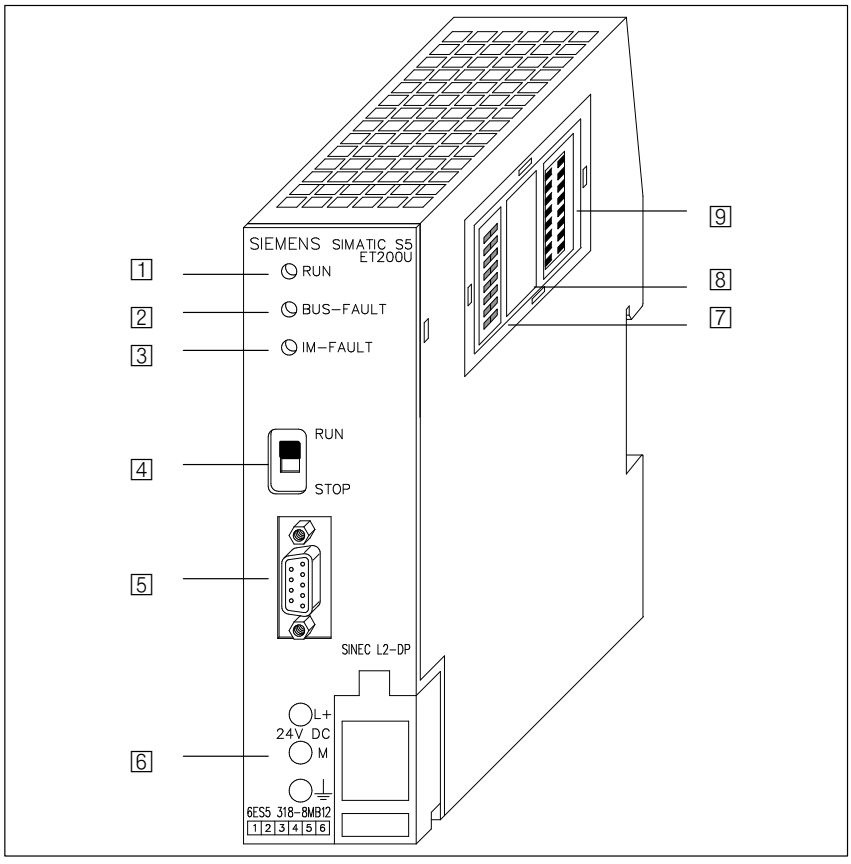

Figure 2-1 Design of the ET 200 Interface Module

2.2 Technical Specifications

For detailed technical specifications see Chapter 8.

Spectrum of I/O Modules

All I/O modules which can be configured with COM ET 200 can be used for configuring the ET 200U distributed I/O station. For an overview of the I/O modules which can be connected see Chapters 8 and 9.

Exception: If the ET 200U is operated as a combi slave, no CPs or IPs are permitted in the ET 200U (→ Section 6).

Mechanical and Electrical Configuration 3

3.1 Mechanical Configuration of the ET 200U Distributed I/O Station 3-2
Installation, Dismantling 3-2
Installing One Tier 3-3
Installing PS 931 Power Supply Module 3-4
Installing PS 935 Power Supply Module 3-4
Installing Bus Units 3-5
Installing an I/O Module on a Bus Unit 3-6
Dismantling 3-7
Expanding an ET 200U Slave Station to Several Tiers 3-9
Addressing with Multi–Tier Configuration 3-11

3.2 Wiring the ET 200U Distributed I/O Station 3-12
Wiring Methods 3-12
Screw–Type Connections 3-12
Crimp Snap–In Connections 3-13
Dismantling Crimp Snap–In Contacts 3-14
Connecting a PS 931 or PS 935 Power Supply Module to the Main Power 3-15
Connecting an ET 200U Interface Module to a PS 931 or PS 935 Power Supply Module 3-15
Connecting Digital Modules 3-16
Connecting Four–Channel Digital Modules 3-16
Connecting Four–Channel Input Modules 3-17
Connecting Four–Channel Output Modules 3-18
Connecting Eight–Channel Digital Modules 3-19
Connecting Eight–Channel Input Modules 3-19
Connecting Eight–Channel Output Modules 3-20
Connecting the 482 Digital Input/Output Module 3-21

3.3 Electrical Configuration of the ET 200U Distributed I/O Station 3-23
Power Supply 3-23
General Electrical Configuration of an ET 200U Slave Station 3-23
Grounded Configuration 3-26
Ungrounded Configuration 3-27
Voltage Potentials in Floating/Nonfloating Configurations 3-28
Nonfloating Configuration 3-28
Floating Configuration 3-30

Figures

3-1	Installation on a Standard Mounting Rail	3-4
3-2	Connecting the Bus Units	3-5
3-3	System to Prevent Plugging In the Wrong Module	3-6
3-4	Removing an ET 200U Interface Module from a Rail	3-7
3-5	Removing Bus Units from a Standard Mounting Rail	3-8
3-6	Multi–Tier Configuration in a Cabinet Using IM 316 Interface Modules	3-10
3-7	Multi–Tier Configuration with a Row of Devices	3-10
3-8	Numbering with Multi–tier Configuration	3-11
3-9	Screw–Type Connection	3-12
3-10	Inserting Crimp Snap–In Contacts	3-13
3-11	Dismantling Crimp Snap–In Contacts	3-14
3-12	Connecting a Power Supply Module to the Mains	3-15
3-13	Two–Wire Connection of a Sensor to Channel 2	3-17
3-14	Two–Wire Connection of a Lamp to Channel 2	3-18
3-15	Connecting a Sensor to Channel 4	3-19
3-16	Connecting a Lamp to Channel 6	3-20
3-17	Connecting a Sensor and Load to the 482 Digital I/O Module	3-22
3-18	Configuration with a 115 V AC/230 V AC Power Supply for an ET 200U Interface Module, Sensors, and Actuators	3-25
3-19	Grounded Configuration with a 24 V DC Power Supply for an ET 200U Interface Module, Sensors, and Actuators (Safe Electrical Isolation According to VDE 0160)	3-26
3-20	Ungrounded Configuration with a 24 V DC Power Supply for an ET 200U Interface Module	3-27
3-21	Simplified Illustration of a Configuration with Nonfloating I/O Modules	3-29
3-22	Simplified Illustration of a Configuration with Floating I/O Modules	3-31

Tables

3-1	Installing, Dismantling and Replacing the Hardware of an ET 200 Station	3-2
3-2	Connecting the Load Voltage to the Terminal Block of a Bus Unit	3-16
3-3	Terminal Assignment of the Front Connector of the 482 Digital I/O Module	3-21

Mechanical and Electrical Configuration 3

This section discusses the following aspects of an ET 200U distributed I/O station:

- Installing a station mechanically
- Wiring a station
- Installing a station electrically

The degree to which you can expand a slave station is limited by the following factors:

- The number of modules you can connect

  (a maximum of 16 bus units or 32 modules)
- The addressing range of an ET 200U slave station

  (a maximum of 32 input bytes and 32 output bytes)
- The current consumption of the individual modules

  (total current consumption from 9 V DC, I/O bus

  $\leq$ 700 mA at 60 °C

  $\leq$ 900 mA at 40 °C)

3.1 Mechanical Configuration of the ET 200U Distributed I/O Station

When installing an ET 200U distributed I/O station, snap the power supply module, the ET 200U interface module, and the bus units into place on a standard mounting rail according to DIN EN 50022. Plug the I/O modules into the bus units.

Installation, Dismantling

Mount the rails on a metal plate that is at least 2 mm (0.08 in.) thick to ensure a good reference potential for the ground connection and the current leads.

There are different installation heights depending on whether you use bus units with screw–type or crimp snap–in terminals.

Table 3-1 lists prerequisites for installing, dismantling, and replacing the hardware of an ET 200U station.

Table 3-1 Installing, Dismantling and Replacing the Hardware of an ET 200 Station

Installing, Dismantling and Replacing:	Prerequisites
I/O Modules	• Put the RUN/STOP switch of the ET 200U interface module in the STOP position. • Turn off the load power supply of the I/O module.
Bus Units, Interface Modules, Power Supply Modules	• Disconnect the power supply for the ET 200U station.

Please note the following if you wish to pull or plug–in I/O modules under load voltage:

Note

Pulling and plugging–in I/O modules under load voltage is permissible under defined conditions:

- The ET 200U interface module must be in the STOP position.
- **All** bus units in a slave station must be version ≥ 4.
- Only digital or analog modules may be pulled and plugged–in under load voltage.

Installing One Tier

To install the ET 200U distributed I/O station, you need the following hardware:

- A power supply module
- An ET 20U interface module
- Bus units
- I/O modules

A power supply is necessary only if no 24 V DC line voltage is available.

Begin your installation at the left end of the standard mounting rail. Add modules from left to right.

This section discusses the following subjects:

- Installing a power supply module and an ET 200U interface module
- Installing bus units
- Installing I/O modules on bus units

You will find notes on dismantling the ET 200U distributed I/O station at the end of the assembly instructions.

Installing PS 931 Power Supply Module and ET 200U Interface Module

The design of the backplane makes it easy to mount a PS 931 power supply module and an ET 200U interface module on a standard mounting rail. Proceed as follows (see Figure 3-1):

1. Working from the left end of the standard mounting rail, hang the power supply module on the rail.
2. Swing the module back until the slide on the module snaps onto the rail.
3. Using the same method, hang an ET 200U interface module onto the rail next to the power supply module.

Installing PS 935 Power Supply Module and ET 200U Interface Module

Other than the PS 931, the PS 935 power supply module is located on the **right–hand** side of the ET 200U interface module.

1. Connect the ET 200U interface module and the PS 935 power supply module via the ribbon cable of the PS 935.

   The ET 200U interface module is then located on the left–hand side of the PS 935.
2. Attach the ET 200U interface module together with the PS 935 onto the standard mounting rail and
3. Swing both modules back until the slide snaps onto the rail.

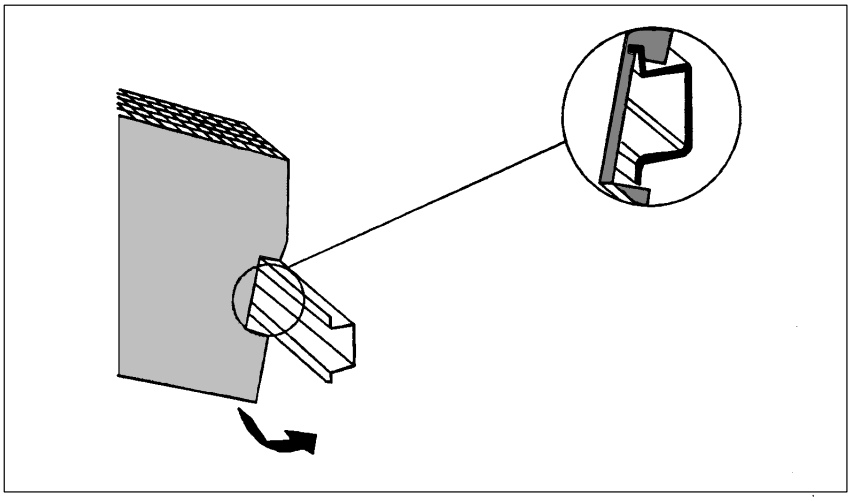

Figure 3-1 Installation on a Standard Mounting Rail

Installing Bus Units

After you have installed the power supply unit and the interface module, proceed as follows:

1. Attach the first bus unit to the standard mounting rail (on the right–hand side of the ET 200U interface module or PS 935 power supply module).
2. Swing the module back until the slide on the module snaps onto the rail.
3. Install additional bus units to the right of the first bus unit using the same method.

Hooks on the sides of the bus units ensure a mechanical connection between the units.

4. On the upper left of the bus unit is a ribbon cable. Pull the connector of the ribbon cable out of its holder (see Figure 3-2).
5. Plug the connector of the ribbon cable into the male connector on the right side of the ET 200U interface module / PS 935 power supply module or into the male connector of the bus unit on the left (see Figure 3-2).

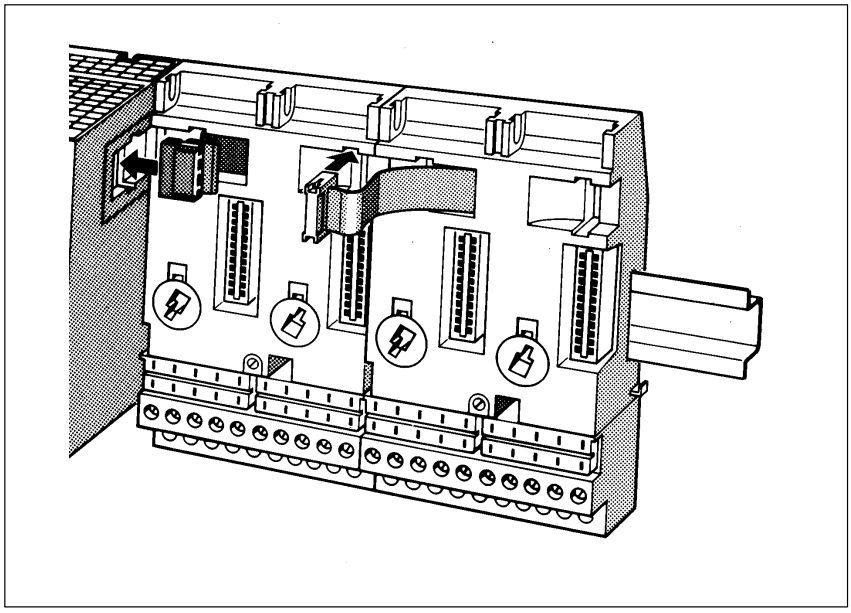

Figure 3-2 Connecting the Bus Units

Installing an I/O Module on a Bus Unit

When installing an I/O module on a bus unit, proceed as follows (see Figure 3-3):

1. Using a screw driver, set the coding key on the bus unit to the type of module that you are installing. The module type (2 to 8) is printed on the front of the I/O module.

   Setting the coding key to the correct module type prevents installing the wrong type of module when you change modules. (1)

2. Hang the module on the top of the bus unit. (2)
3. Swing the module back. (3)
4. Press the module into place.
5. Fasten the screw on the bottom front of the module to attach the module to the bus unit.

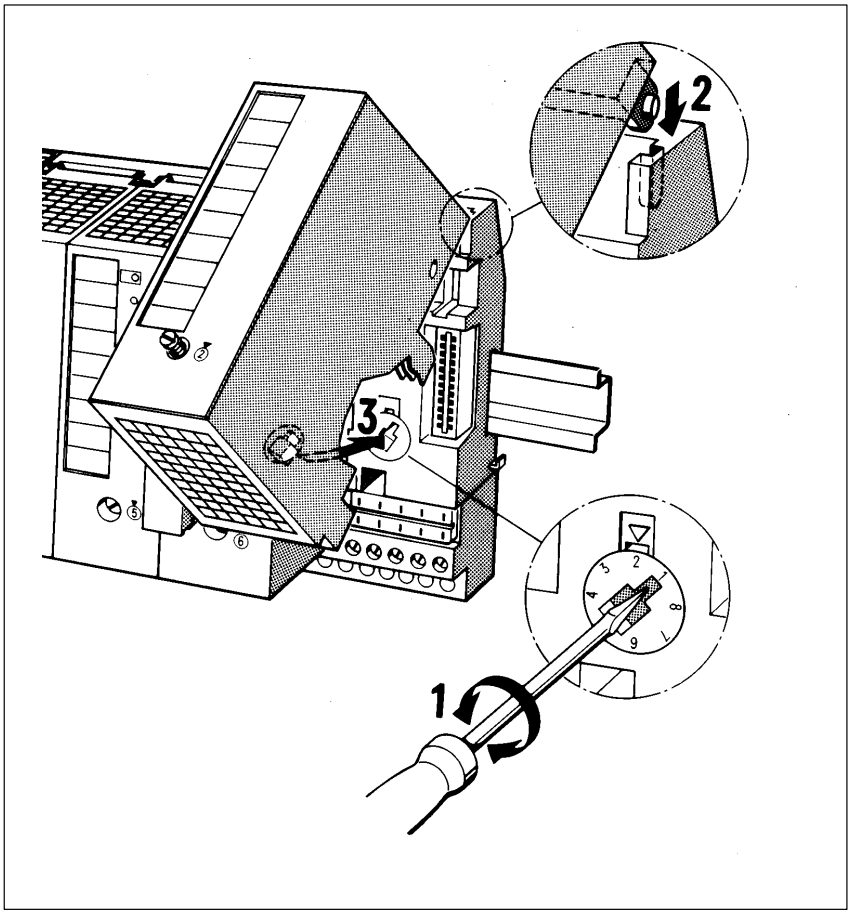

Figure 3-3 System to Prevent Plugging In the Wrong Module

Dismantling

When dismantling an ET 200U slave station, begin by removing the power supply unit and the ET 200U interface module:

1. Turn off the 115 V AC/230 V AC voltage supply.
2. Disconnect the ET 200U interface module from the power supply unit.
3. Using a screwdriver, press down on the slide on the bottom of each module).
4. Swing the module up and off of the standard mounting rail.

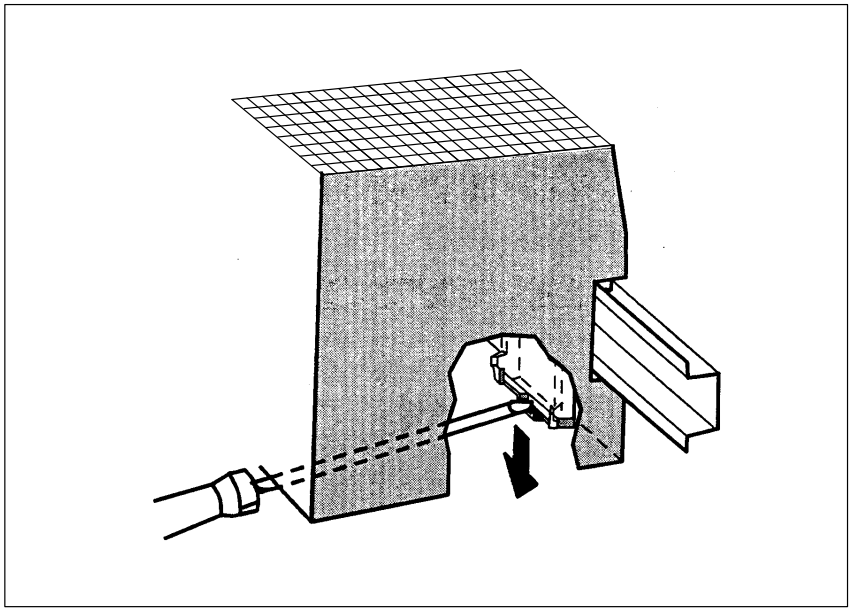

Figure 3-4 Removing an ET 200U Interface Module from a Rail

Remove I/O module:

1. Loosen the screw at the bottom of the module and swinging the module up and out of the bus unit.

Remove bus units:

2. Disconnect the ribbon cable of each bus unit from its neighboring bus unit or from the ET 200U interface module (see **1** in Figure 3-5).
3. Using a screwdriver, press down on the bottom of the slide on each unit (**2**), (**3**).
4. Swing the bus unit or the ET 200U interface module up and off of the standard mounting rail (**4**).

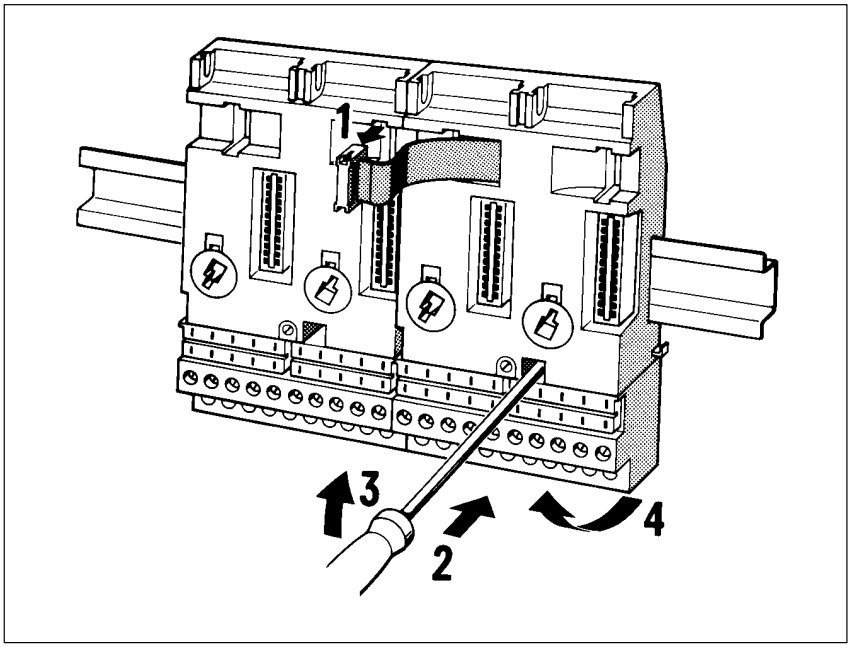

Figure 3-5 Removing Bus Units from a Standard Mounting Rail

Expanding an ET 200U Slave Station to Several Tiers

If your ET 200U slave station has too many modules to fit into one tier, you can expand your station to a maximum of four tiers with a maximum total of 16 bus units. As long as you stay within the limit of 16 bus units, it does not matter how many bus units are installed in one tier. To connect the tiers to each other, you need one interface module IM 315 or IM 316 per tier.

You install the interface modules that connect the tiers as follows:

1. Hang the module on standard mount. rail to the right of the last bus unit.
2. Swing the module back until the slide on the module snaps into place.
3. Connect ribbon cable from interface module to the last bus unit in the tier.

You must choose between two interface modules to connect the tiers of your multi–tier configuration, depending on how many tiers you have. The following table compares the two types of interface modules.

Interface Module	No. of Tiers	Connecting Cable
IM 315	Two	0.5 m (1.6 ft.) Permanently Connected to Two Modules
IM 316	Three to Four	712–8 (Order No. 6ES5 712–8...)

Expand your station as follows:

4. Install an IM 315 or IM 316 interface module to the right of the last bus unit on each tier.
5. If you are using IM 316 interface modules, use a 712–8 connecting cable to connect the two modules and secure the connectors of the cable with two screws each (see Figure 3-6).

Make sure that you include at least 210 mm (8.3 in.) net clearance between the tiers (see Figures 3-6 and 3-7).

Figure 3-6 shows a multi–tier configuration using IM 316 interface modules in a cabinet. Cabinet installation can be necessary under following conditions:

- In danger of coming into contact with live parts (e.g., supply terminals)
- When environmental conditions are harsh (e.g., dust, splashing water, corrosive gases and vapors)

When you select a cabinet, make sure that you choose one that can dissipate enough heat to ensure proper functioning of your system. If necessary, use a fan. To measure cabinet ventilation, determine the total power loss (heat dissipation) as the sum of all typical power losses (heat dissipation) (see Catalog ST 52.1).

To ensure interference immunity, install your ET 200U slave station on a metal plate. If this is not possible, you must at least connect the standard mounting rails to each other using a low resistance conductor. You can also use mounting plates of the 8LW or 8LX systems (see Catalog NV 21).

You can also install the standard mounting rails vertically so that the modules are installed on top of each other. In such an arrangement, heat dissipation through convection is less than in a horizontal configuration. For this reason, the permissible ambient temperature is limited to 40° C (104° F).

If you use the vertical configuration, you must maintain the same minimum clearances as with the horizontal configuration. (see Fig. 3-6 or Fig. 3-7).

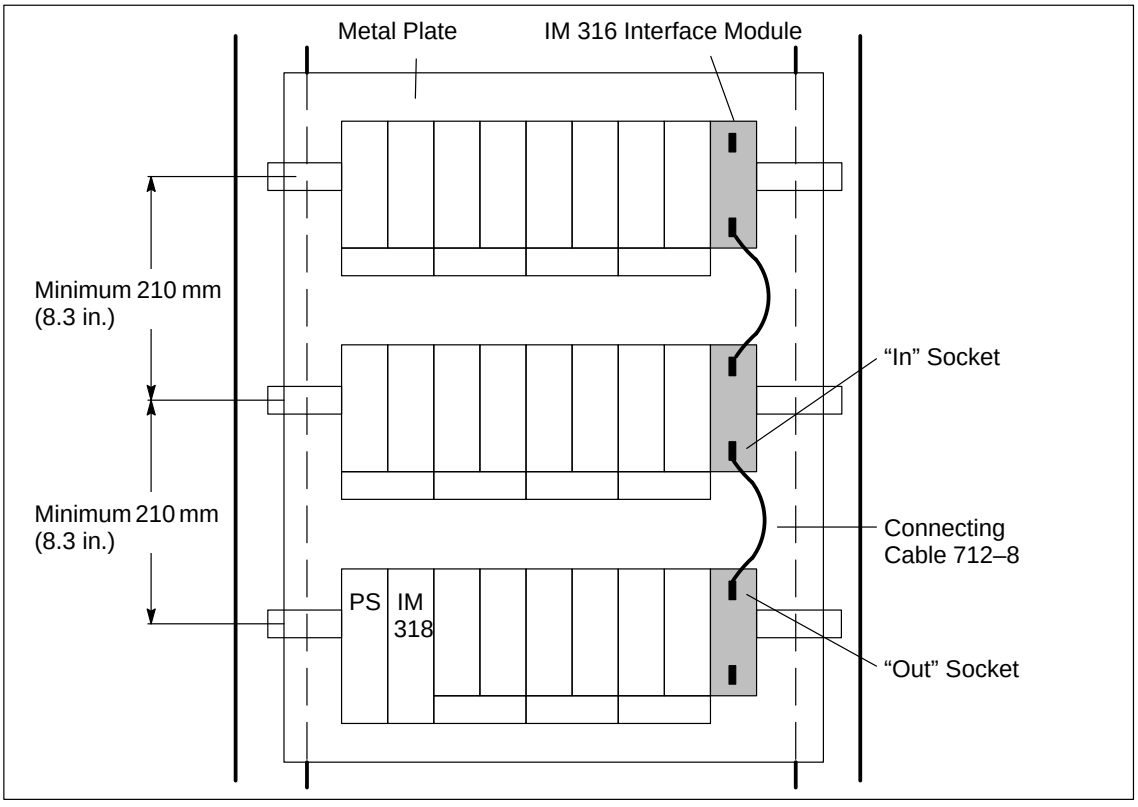

Figure 3-6 Multi–Tier Configuration in a Cabinet Using IM 316 Interface Modules

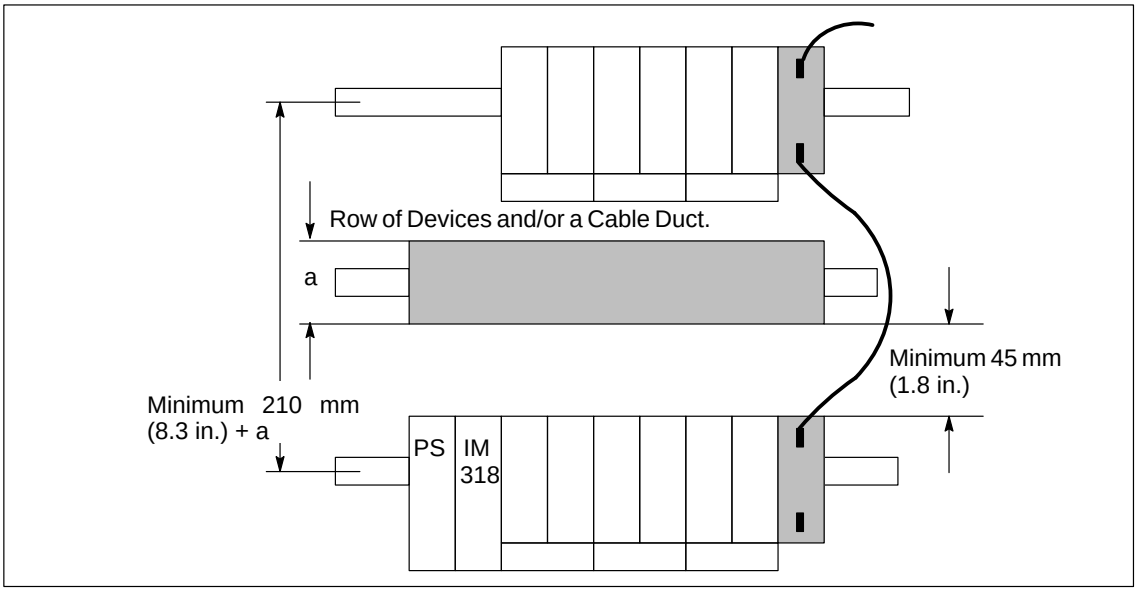

Figure 3-7 Multi–Tier Configuration with a Row of Devices

Addressing with Multi–tier Configuration

The ET 200U can be configured in a maximum of 4 tiers with up to 32 slots. The slots are numbered consecutively, starting with the slot next to the ET 200U module which has the number “0”. The numbers are assigned in any case, whether a module is plugged in or not.

If the ET 200U is configured in more than one tier, numbering of the expansion tiers is continued with the slot at the far left end.

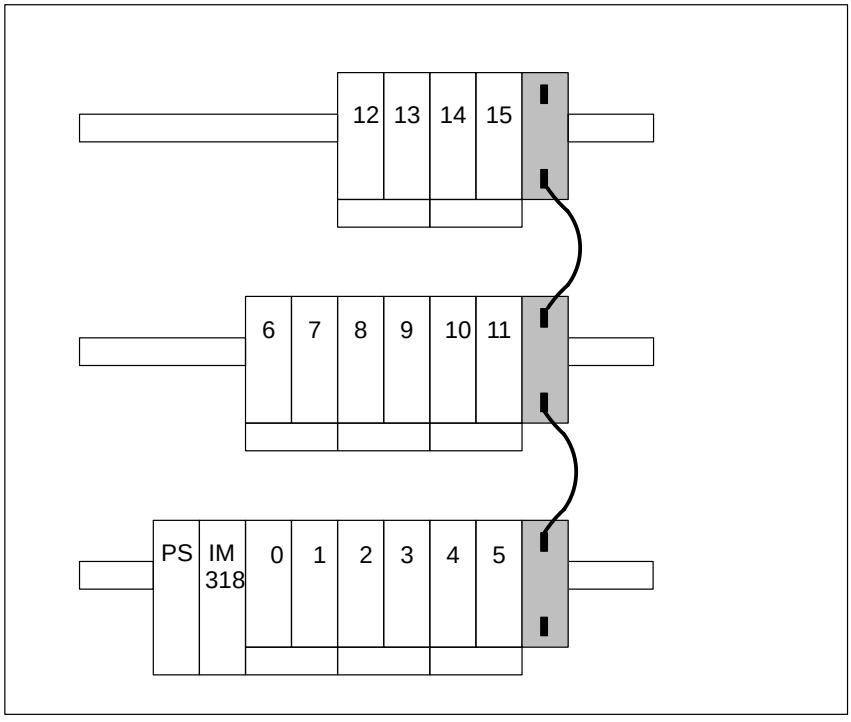

Figure 3-8 Numbering with Multi–tier Configuration

When expanding the configuration, it is essential that you always mount the additional bus units in the top tier on the right. Otherwise the slot numbers of the bus units to the right of the the expansion will be changed.

3.2 Wiring the ET 200U Distributed I/O Station

This section discusses the following subjects:

- How to connect lines to the terminal block of an ET 200U slave station (using screw–type or crimp snap–in terminals)
- How the power supply modules are connected to the main power
- How to connect digital modules

Wiring Methods

You can use one of the following two types of connections to wire the terminal block of a bus unit:

- Screw type
- Crimp snap–in

Screw–Type Connections

Using this wiring method, you can clamp two lines to each terminal point of a bus unit. To screw them tight, it is best to use a screw driver with a blade that is 5 mm (approximately 3/16 in.) wide. Figure 3-9 illustrates a screw–type connection. The following table lists the permissible cross sections of lines you can connect to this type of terminal.

Type of Conductor	Permissible Cross Section
Stranded with Core End Sleeves	2×0.5 mm^2 to 1.5 mm^2 (Approximately AWG 20 to AWG 16)
Solid	2×0.5 mm^2 to 2.5 mm^2 (Approximately AWG 20 to AWG 14)

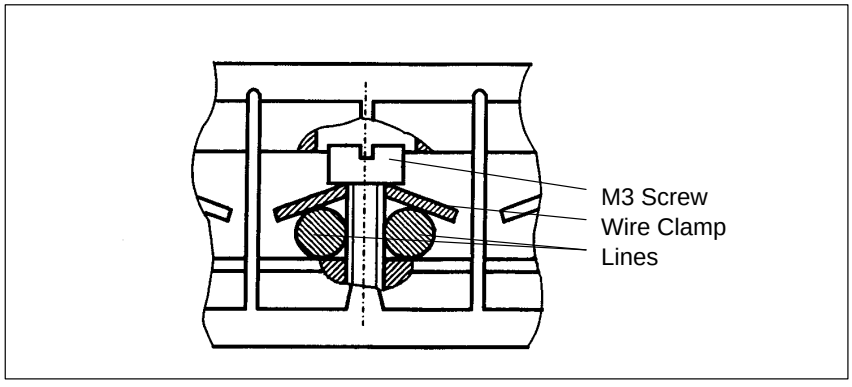

Figure 3-9 Screw–Type Connection

Crimp Snap–In Connections

Bus units with crimp snap–in connections have the same overall height as I/O modules.

You can connect stranded conductors with a cross section of 0.5 mm^2 to 1.5 mm^2 (approximately AWG 20 to AWG 16) to crimp snap–in contacts.

To insert a contact into a terminal block, remove the module that is plugged in and proceed as follows (see also Figure 3-10):

1. Using a screw driver, press the terminal block down. (1)
2. Turn the terminal block approximately 180° until the back of the module is visible. (2)
3. Push the contact into the desired recess until the locating spring engages. The locating spring must point into the slot. (3)
4. Pull lightly on the line to ensure that the contact is properly engaged.
5. Turn the terminal block back approximately 180° and push it up until it snaps into position.

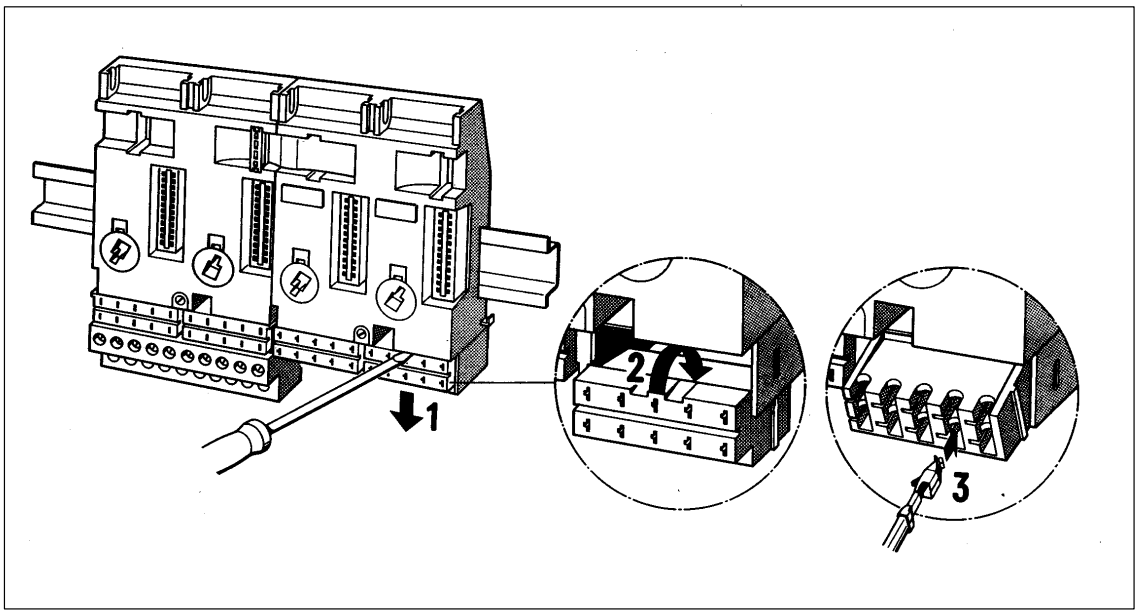

Figure 3-10 Inserting Crimp Snap–In Contacts

Dismantling Crimp Snap–In Contacts

To dismantle crimp snap–in contacts, bring the terminal block into the position illustrated in Figure 3-11 and proceed as follows:

1. Put the extraction tool into the slot next to the contact so that you can compress the barb. (1)
2. Place the line in the groove of the extraction tool and pull the tool and line out. (2)
3. To use the contact again, straighten out the deformed barb.

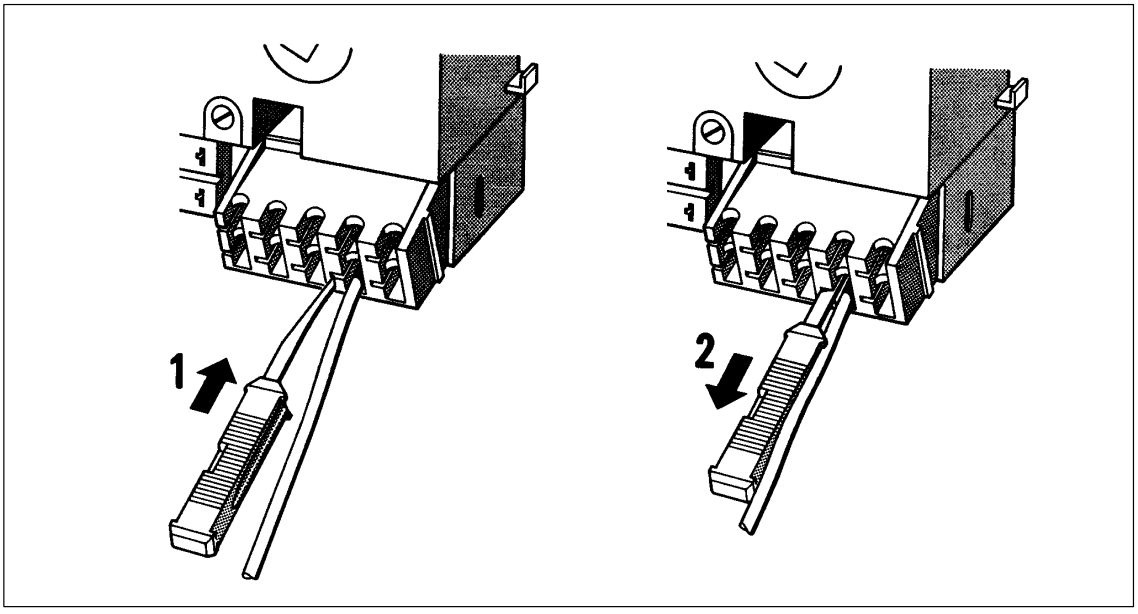

Figure 3-11Dismantling Crimp Snap–In Contacts

Connecting a PS 931 or PS 935 Power Supply Module to the Main Power

To connect a PS 931 power supply module to the main power, proceed as follows (see Figure 3-12):

1. Set the voltage selector to the line voltage that you are using.
2. Lift the protective cover. (1)
3. Connect the power cable to terminals L1, N and ⏚ (2), (3), (4) and
4. Close the protective cover. (5)

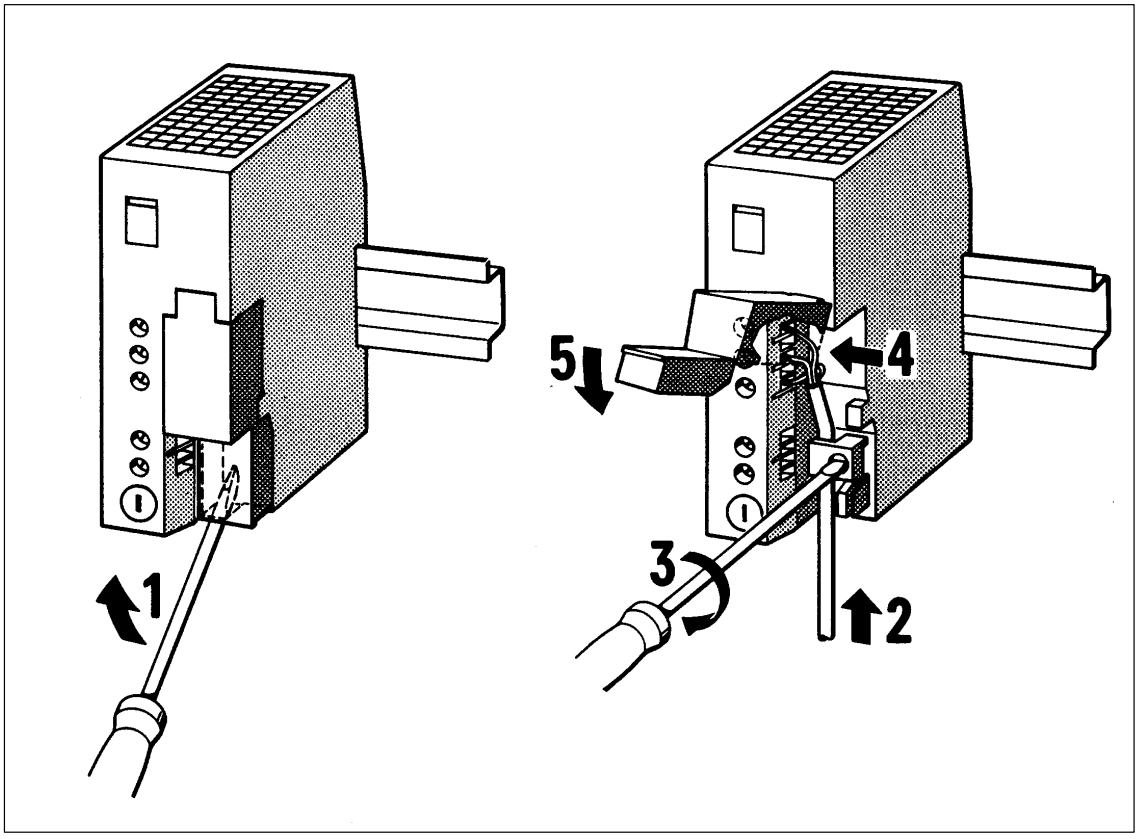

Figure 3-12 Connecting a Power Supply Module to the Mains

Connecting an ET 200U Interface Module to a PS 931 or PS 935 Power Supply Module

Connection of the ET 200U interface module to a power supply module is different for the PS 931 and PS 935.

PS 931	PS 935
1. Connect the L+ and M terminals of the PS 931 power supply module to the correspond. terminals on the ET 200U interf. module.	1. Connect the L+ terminal of the PS 935 power supply module to the correspond. terminals on the ET 200U interf. module.

2. For a grounded configuration, connect the ⏚ terminal of the ET 200U interface module to the standard mounting rail.

Connecting Digital Modules

You plug all I/O modules into bus units. You wire the terminal blocks of the bus units. The information that follows describes connections to screw–type terminals.

However, you can also use crimp snap–in connections. In both cases, you will find the terminal assignments on the blocks.

Table 3-2 shows the assignment that always applies when you connect the load voltage.

Table 3-2 Connecting the Load Voltage to the Terminal Block of a Bus Unit

Load Voltage	Terminal 1	Terminal 2
24 V DC	L+	M
115 V AC/230 V AC	L1	N



Caution

After the L+ supply is switched off, energy is stored in digital outputs in an internal capacitor for about 100 ms.

This energy can be sufficient to activate small loads (e.g. pulse valves) when an output is triggered.

Connecting Four–Channel Digital Modules

Because all four–channel modules are designed for a two–wire connection, you can wire directly to a sensor or an actuator without using an external distribution block.

All 24 V DC four–channel digital modules have a red F LED to indicate faults. This LED signals a failure of the load voltage. Where inputs are concerned, this LED also indicates a short circuit of M in the sensor lines. Where outputs are concerned, this LED indicates an output error.

The 115 V AC/230 V AC **input** modules have no fault LED. The 115 V AC/230 V AC **output** modules have an LED to indicate a defective fuse. The four channels of a module are numbered from .0 to .3. A pair of terminals on the terminal block is assigned to each channel.

The terminal assignment and the connection diagram are printed on the front panel of the module.

When there is a short in the output circuits, the four–channel output modules generate a fault signal. You can evaluate this fault signal as a diagnostics signal via the I/O bus.

Connecting Four–Channel Input Modules

Figure 3-13 illustrates the following example for connecting a sensor to a four–channel input module:

Example: A sensor is connected to an input module with start address 3.0. The sensor is connected to channel 2 (address I 3.2).

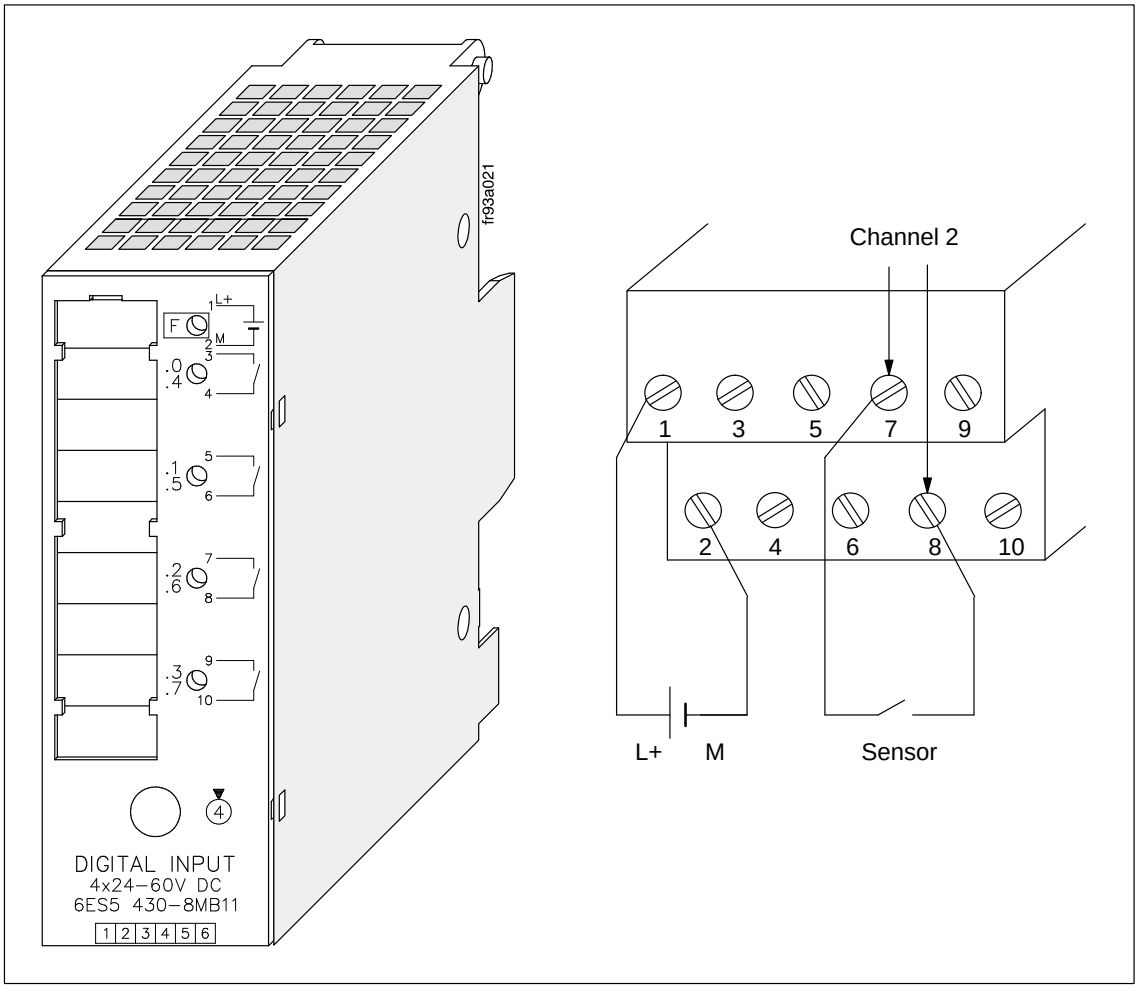

Figure 3-13 Two–Wire Connection of a Sensor to Channel 2

Connecting Four–Channel Output Modules

Figure 3-14 illustrates the following example for connecting a lamp to a four–channel output module:

Example: A lamp is connected to an output module with start address 1.0. The lamp is connected to channel 2 (address Q 1.2).

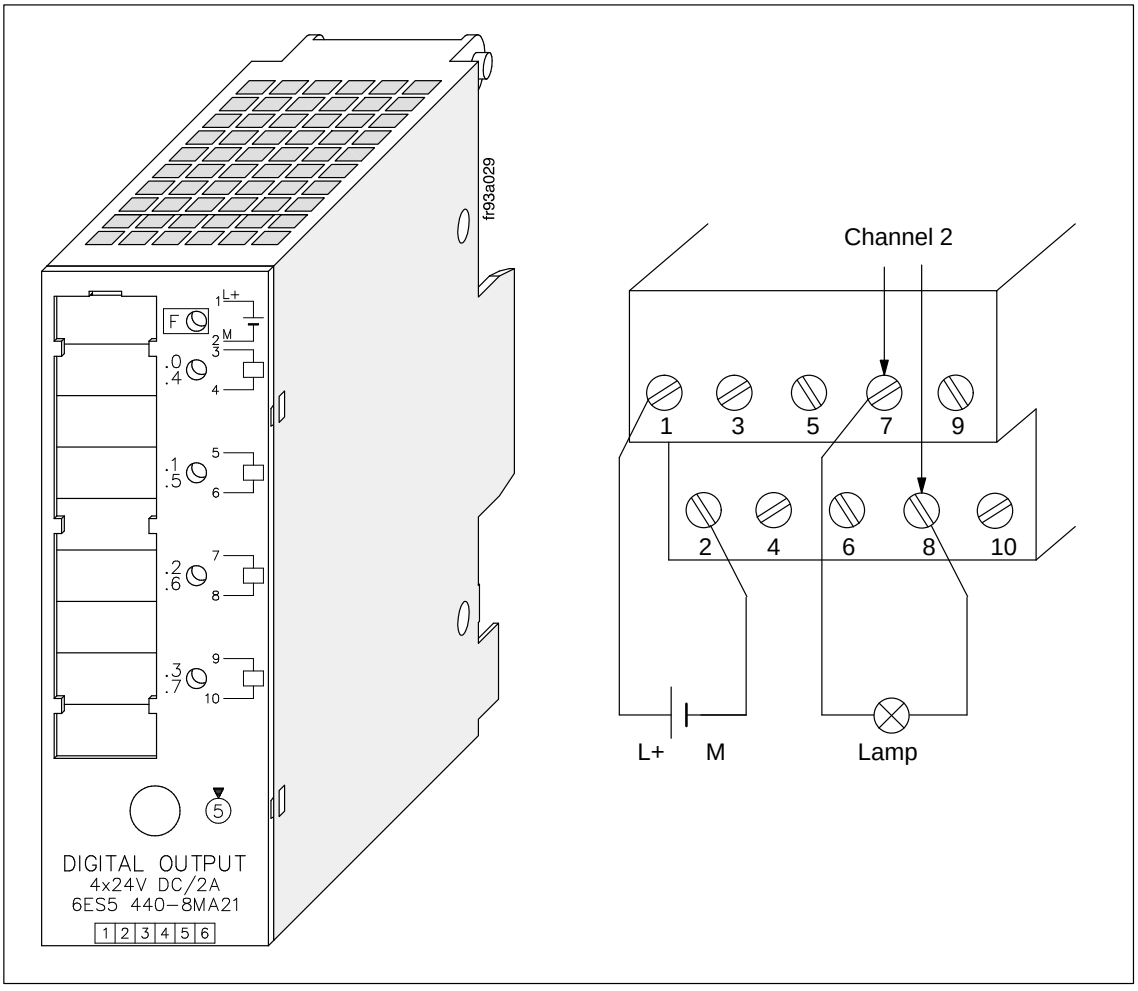

Figure 3-14 Two–Wire Connection of a Lamp to Channel 2

Connecting Eight–Channel Digital Modules

Because eight–channel modules do not have a two–wire connection, you need an external distribution block for them.

The eight channels of a module are numbered from .0 to .7. One terminal on the terminal block is assigned to each channel. The terminal assignment and the connection diagram are printed on the front panel of the module.

Connecting Eight–Channel Input Modules

When connecting eight–channel input modules, you must connect a sensor to terminal 1 via the L+ terminal strip.

Example

A sensor is connected to an input module with start address 3.0. The sensor is connected to channel 4 (address I 3.4).

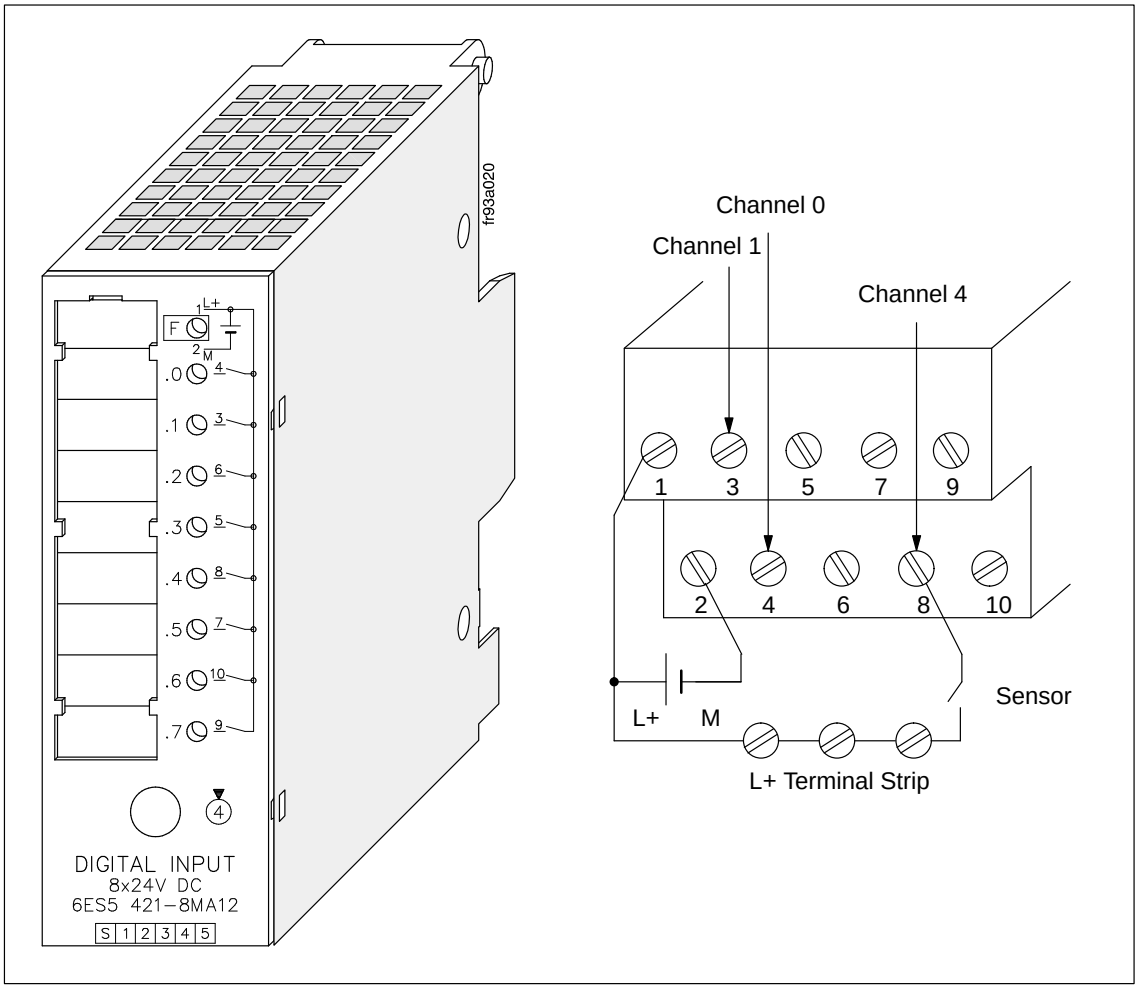

Figure 3-15 Connecting a Sensor to Channel 4

Connecting Eight–Channel Output Modules

When connecting eight–channel output modules, you must connect actuators to terminal 2 of the terminal block via the M terminal strip. This situation does not apply to the 8 × 5 to 24 V DC/0.1 A digital output module. Figure 3–15 illustrates the following example for connecting a lamp to an eight–channel output module:

Example

A lamp is connected to an eight–channel output module with start address 5.0. The lamp is connected to channel 6 (address Q 5.6).

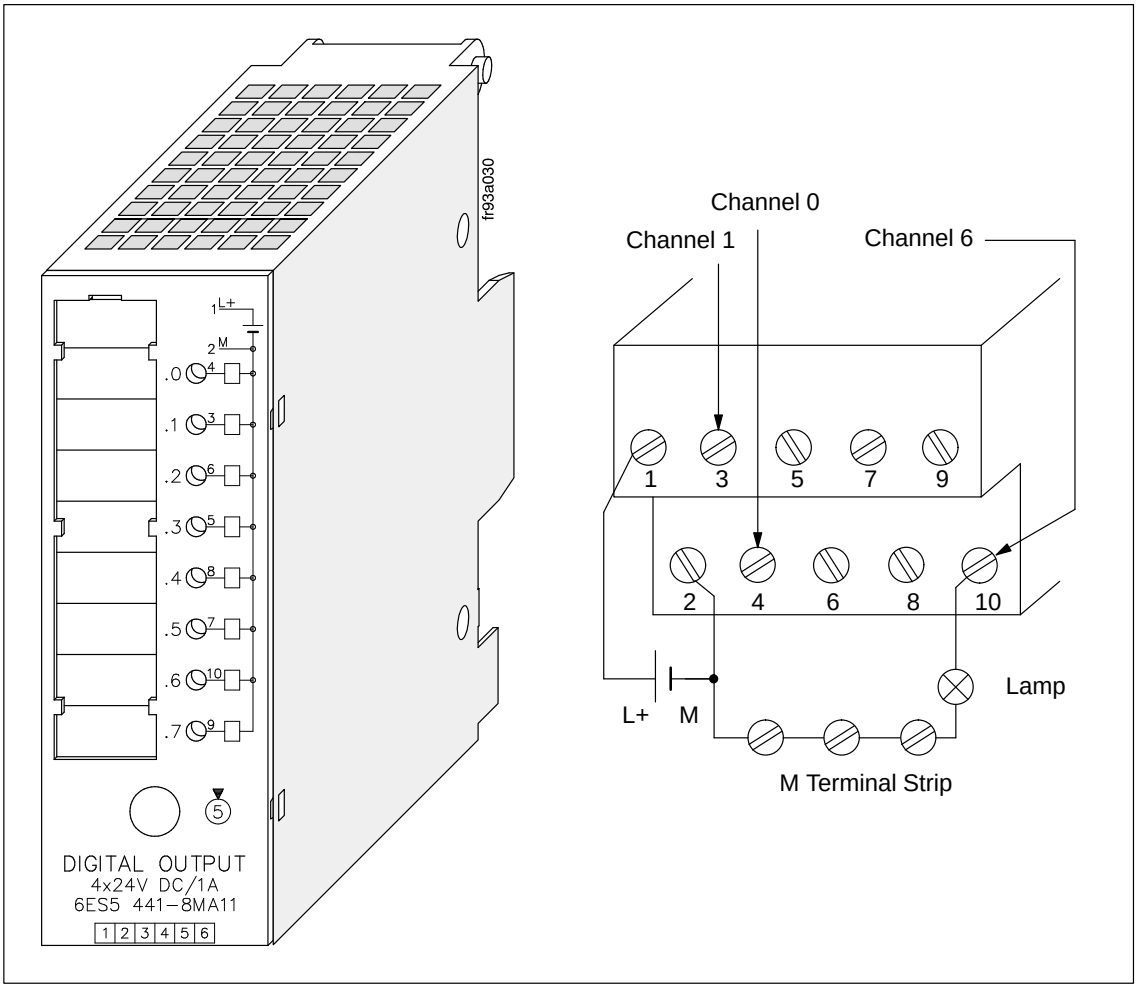

Figure 3-16 Connecting a Lamp to Channel 6

Connecting the 482 Digital Input/ Output Module

You wire the 482 digital input/output module on a 40–pin connector using screw–type or crimp snap–in connections. Because the module has no two–wire connection, you need to use an external distribution block.

One terminal on the 40–pin connector is assigned to each channel. The channel numbers are printed on the front panel of the module. The 16 channels of the input side (IN) and the output side (OUT) of the 482 digital I/O module are numbered.

n + 1.0	Byte “Module Address + 1”
....	
n + 1.7	
and	and
n.0	Byte “Module Address”
....	
n.7	

Table 3-3 Terminal Assignment of the Front Connector of the 482 Digital I/O Module

Connection (OUT)	Assignment		Connection (IN)	Assignment
1	L + (for connections 2 to 9)		1	L +
2	“Module address + 1” – bit 0	/0.5A	2	“Module address + 1” – bit 0
3	“Module address + 1” – bit 1	/0.5A	3	“Module address + 1” – bit 1
4	“Module address + 1” – bit 2	/0.5A	4	“Module address + 1” – bit 2
5	“Module address + 1” – bit 3	/0.5A	5	“Module address + 1” – bit 3
6	“Module address + 1” – bit 4	/0.5A	6	“Module address + 1” – bit 4
7	“Module address + 1” – bit 5	/0.5A	7	“Module address + 1” – bit 5
8	“Module address + 1” – bit 6	/0.5A	8	“Module address + 1” – bit 6
9	“Module address + 1” – bit 7	/0.5A	9	“Module address + 1” – bit 7
10	M (for connections 2 to 9)		10	Not assigned
11	L+ (for connections 12 to 19)		11	Not assigned
12	“Module address” – bit 0	/0.5A	12	“Module address” – bit 0
13	“Module address” – bit 1	/0.5A	13	“Module address” – bit 1
14	“Module address” – bit 2	/0.5A	14	“Module address” – bit 2
15	“Module address” – bit 3	/0.5A	15	“Module address” – bit 3
16	“Module address” – bit 4	/0.5A	16	“Module address” – bit 4
17	“Module address” – bit 5	/0.5A	17	“Module address” – bit 5
18	“Module address” – bit 6	/0.5A	18	“Module address” – bit 6
19	“Module address” – bit 7	/0.5A	19	“Module address” – bit 7
20	M (for connections 12 to 19)		20	M

Example

The module start address is 6.0. Inputs and outputs have the same address (in the ET 200 distributed I/O station, the inputs and outputs of this module can also have different addresses). A sensor is connected to input I 6.4 and a lamp is connected to output Q 7.3. See Figure 3-17 for the front connections.

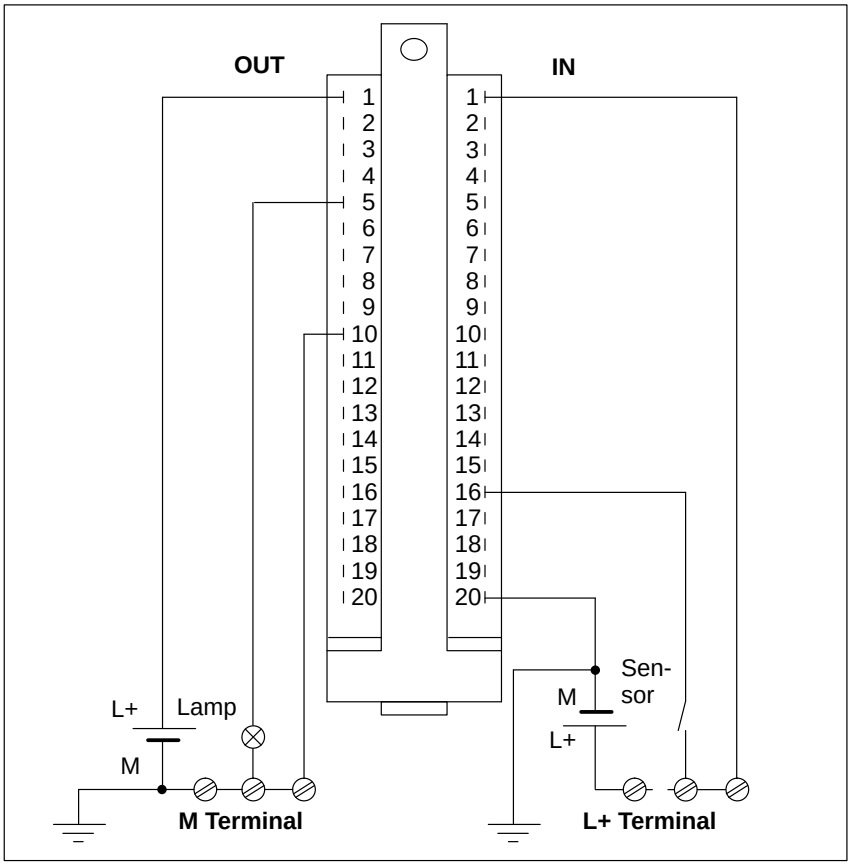

Figure 3-17 Connecting a Sensor and Load to the 482 Digital I/O Module

3.3 Electrical Configuration of the ET 200U Distributed I/O Station

Power Supply

The ET 200U distributed I/O station has the following electrical circuits:

- The control circuit for logic control (24 V DC for the ET 200U interface module)
- The control circuit for sensors (24 V DC)

  and

- The load circuit for actuators.

To supply the control and load circuits, use one of the following:

- The PS 931 power supply module

  or

- The PS 935 power supply module

  or

- A Siemens load power supply of the 6EV1 series (see Catalog ET1).

If you connect any other load power supply, the voltage must be in a range of 20 V to 30 V (including ripple) and the load power supply must be safely isolated to DIN VDE 0160.

Note

If you use switch–mode power supply units to supply floating analog modules and BERO poximity limit switches, you must first run this supply through a line filter.

General Electrical Configuration of an ET 200U Slave Station

Figures 3-18 through 3-20 show the following configurations for an ET 200U slave station:

- Configuration with a 115 V AC/230 V AC power supply for an ET 200U interface module, sensors, and actuators
- Grounded configuration with a 24 V DC power supply for an ET 200U interface module, sensors, and actuators

  and

- Ungrounded configuration with a 24 V DC power supply for an ET 200U interface module.

When planning the electrical configuration of your ET 200U distributed I/O station, note the following:

- You must provide a main switch (**1**) for the ET 200U interface module, the sensors, and the actuators according to VDE 0100.
- You can connect the main power for the ET 200U interface module and the load circuit without providing additional fuse protection (**2**) if your radial lines have the following specifications:
  - No more than 3 meters (9.8 ft.) long
  - Inherently ground–fault resistant
  - Inherently short–circuit proof
- You need a load power supply (**3**) for 24 V DC load circuits.

  You need a back–up capacitor (rating: 200 μF per 1 A load current) for nonstabilized load power supply units.
- If you have AC load circuits with more than five actuating coils, galvanic isolation by means of a transformer (**4**) is recommended.
- You should ground the load circuit at one end (see Figure 3-19).
- Use a low resistance conductor to connect the standard mounting rail to the cabinet chassis ground (**10**).
- You should fuse the load voltage for sensor and actuator circuits separately (**6**), (**7**).
- A line fuse (**9**) is necessary to provide protection for the supply voltage.
- If the PS 935 power supply module is used, then the ET 200U interface module and the PS 935 power supply module are connected only via terminal L+ (**11**). The M line is not provided with the PS 935 module.

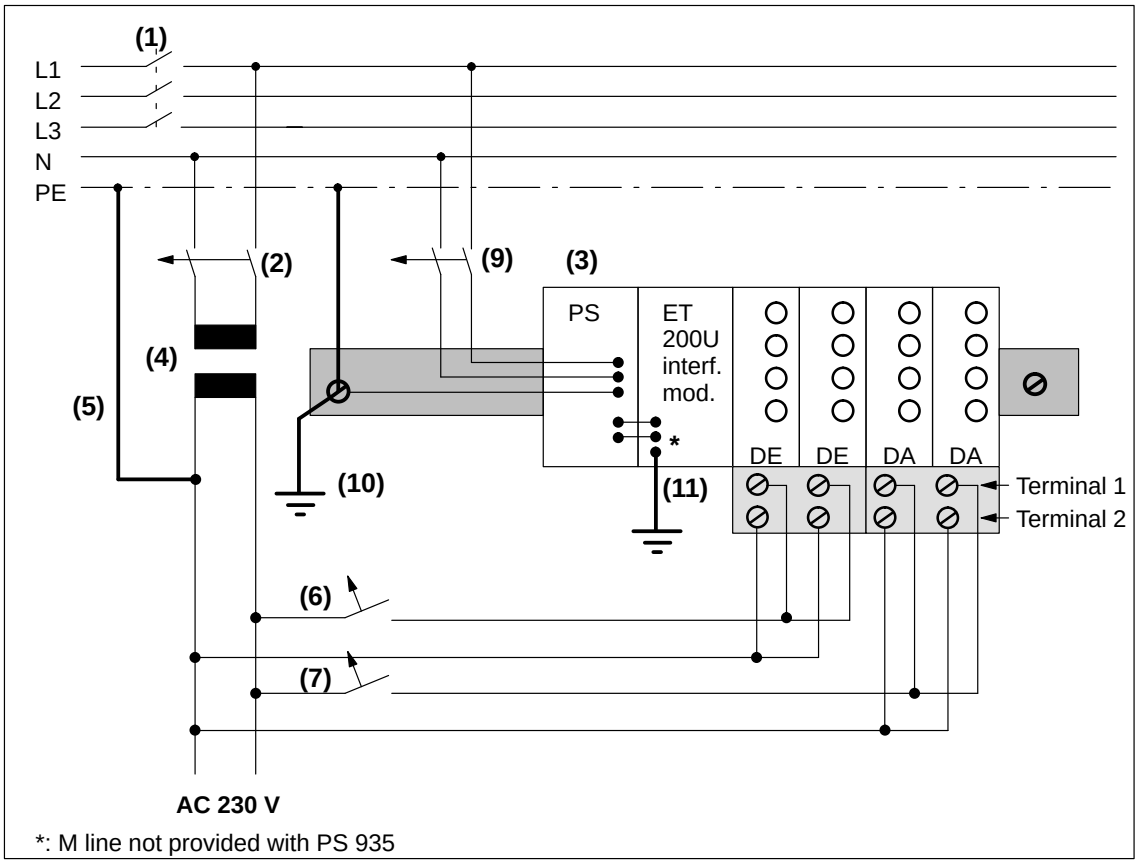

Figure 3-18 Configuration with a 115 V AC/230 V AC Power Supply for an ET 200U Interface Module, Sensors, and Actuators

Grounded Configuration

For a grounded configuration, on the load power supply (M terminal) or on the isolating transformer in the secondary circuit, provide a removable connection (5) to the protective ground conductor (see Figure 3-19).

Ground all machine parts.

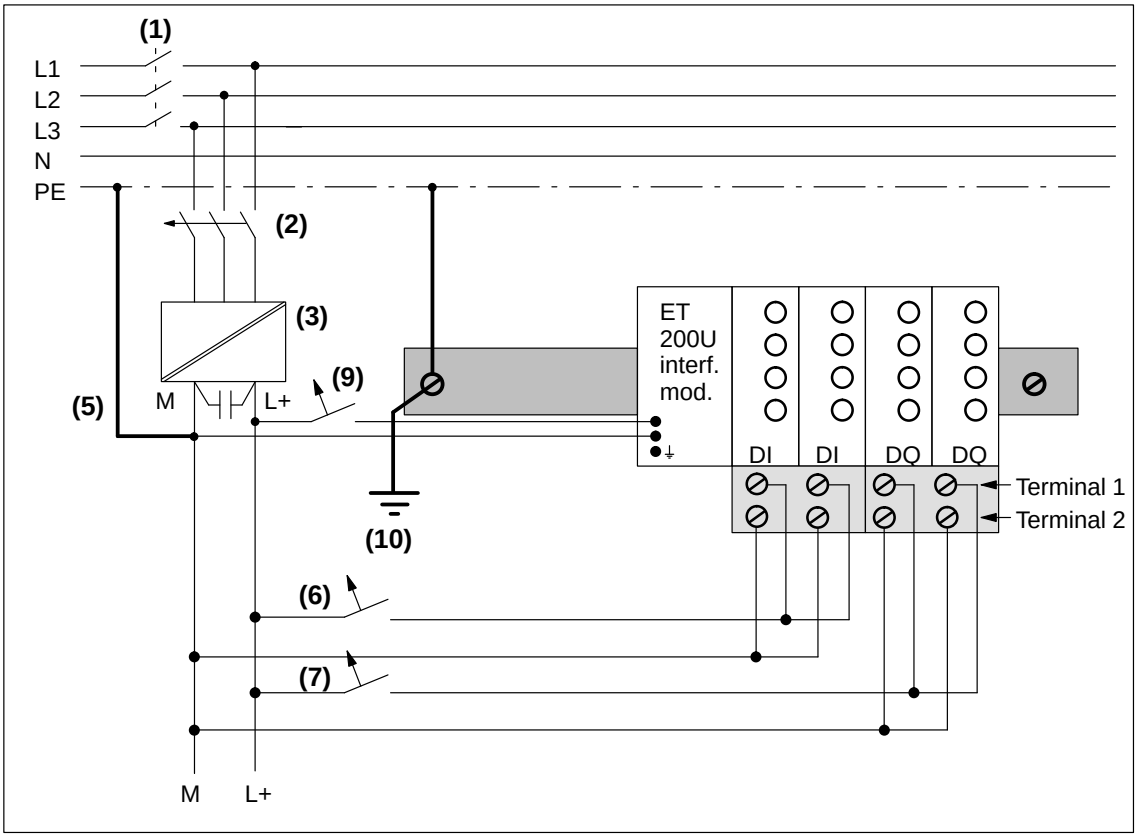

Figure 3-19 Grounded Configuration with a 24 V DC Power Supply for an ET 200U Interface Module, Sensors, and Actuators (Safe Electrical Isolation According to VDE 0160)

Ungrounded Configuration

An ungrounded configuration differs from a grounded one in that it has no connection between PE (the protective ground) and the chassis ground of the power supply. You must provide fault voltage monitoring for load circuits that are not grounded (**8**).

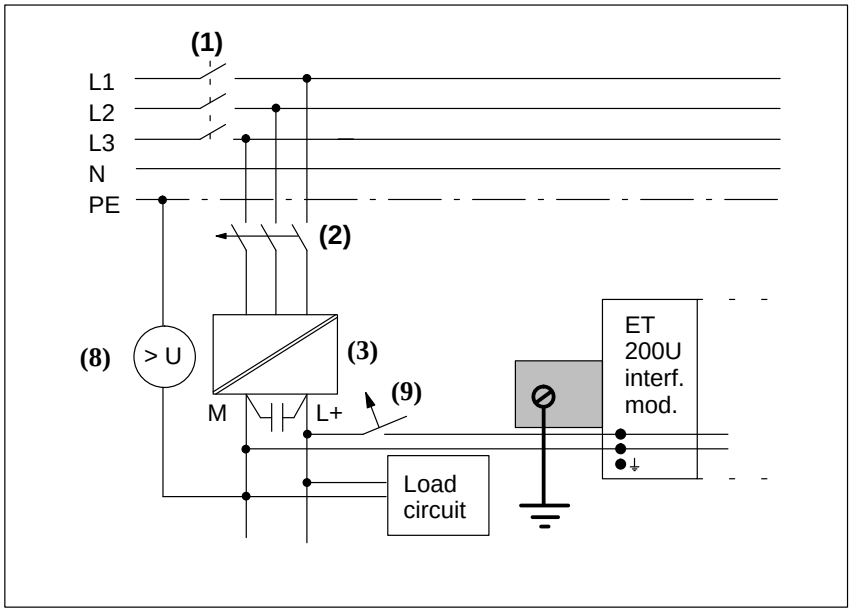

Figure 3-20 Ungrounded Configuration with a 24 V DC Power Supply for an ET 200U Interface Module

Voltage Potentials in Floating/Nonfloating Configurations

The following sections discuss the differences in nonfloating and floating configurations.

Nonfloating Configuration

A configuration in which the control circuit and the load circuit have the same chassis ground is a nonfloating configuration.

Example

You are using a load power supply as the common power supply for the control and load circuits. In this way, you have set up your ET 200U distributed I/O station as a nonfloating configuration.

In a nonfloating configuration, you can use both nonfloating and floating modules. In either case, the common reference potential removes the isolation. This section deals with a configuration that has nonfloating modules.

A configuration with nonfloating modules can be one of the following two types:

- Ungrounded

  and

- Grounded

For an ungrounded configuration, you must provide isolation to ground with voltage limitation (see Figure 3-20). Do **not** connect the ground terminal of the ET 200U interface module to the grounded standard mounting rail.

For a grounded configuration, connect the ground terminal of the Et 200U interface module to the grounded standard mounting rail (see Figure 3-19).

Note

If the ET 200U interface module is earthed, then the GND line of the I/O bus is also grounded, because ground connection and M connection are jumpered internally on the ET 200U interface module.

The ET 200U interface module and the standard mounting rail are galvanically isolated; i.e. even if the standard mounting rail is grounded, an ungrounded configuration for the ET 200U interface module is still ensured.

The standard mounting rail must always be grounded.

If you configure your ET 200U distributed I/O station as a nonfloating station, connect the chassis ground of the load circuit to the chassis ground of the control circuit externally.

Nonfloating I/O modules work according to the following principle (see Figure 3-21):

- Input modules:

Reference potential is the M line (chassis ground of the control circuit). A voltage drop on line [1] affects the input signal level $V_{I.}$

- Output modules:

Reference potential is terminal 2 (M) of the terminal block. A voltage drop ΔV_2 on line [2] increases the chassis ground of the output driver and in this way lowers the resulting control voltage V_{ST} (see Figure 3-21).

For a nonfloating configuration, make sure that the voltage drop on lines [1] and [2] never exceeds 1 V. Otherwise the reference potentials shift and the modules can malfunction (see Figure 3-21).

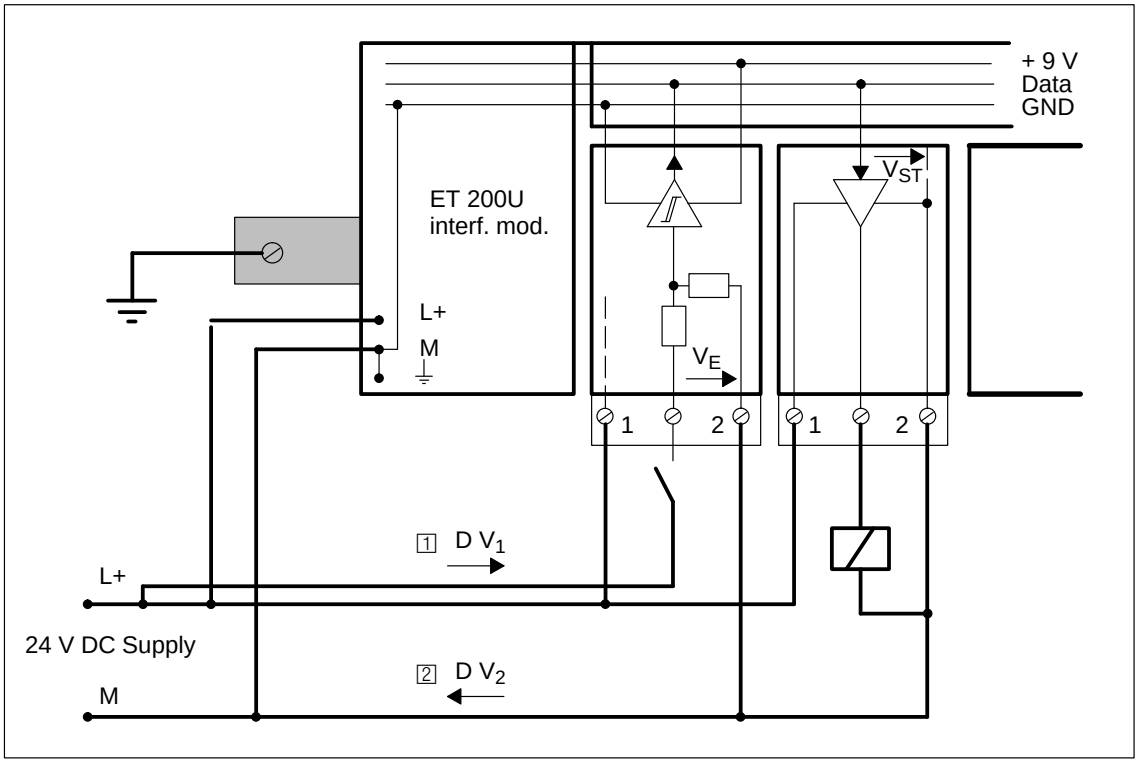

Figure 3-21 Simplified Illustration of a Configuration with Nonfloating I/O Modules

Floating Configuration

A configuration in which the control circuit and the load circuit are galvanically isolated is a floating configuration.

A floating configuration is necessary under the following conditions:

- When you need to increase interference immunity of load circuits
- When you cannot interconnect load circuits

  (e.g., because the sensors have different reference voltages, or power is supplied from batteries, or the positive pole of the battery is grounded)

  and

- When you are using AC load circuits

A floating configuration can be one of the following two types:

- Ungrounded

  and

- Grounded

For an ungrounded configuration, you must provide isolation monitoring to ground with voltage limitation (see Figure 3-20). Do **not** connect the ground terminal of the IM 318–B interface module to the grounded standard mounting rail.

For a grounded configuration, connect the ground terminal of the ET 200U interface module to the grounded standard mounting rail. When the load circuit is grounded, the grounding of the ET 200U interface module removes the galvanic isolation.

A floating configuration has the following characteristics:

- Differences in potential do not result in compensating currents. Equipotential bonding conductors are not necessary between the devices (e.g., between tiers or stations).
- Dangerous contact voltages with respect to ground are possible. Avoid them through such measures as grounding specific system parts or by using isolation monitoring with voltage limitation.

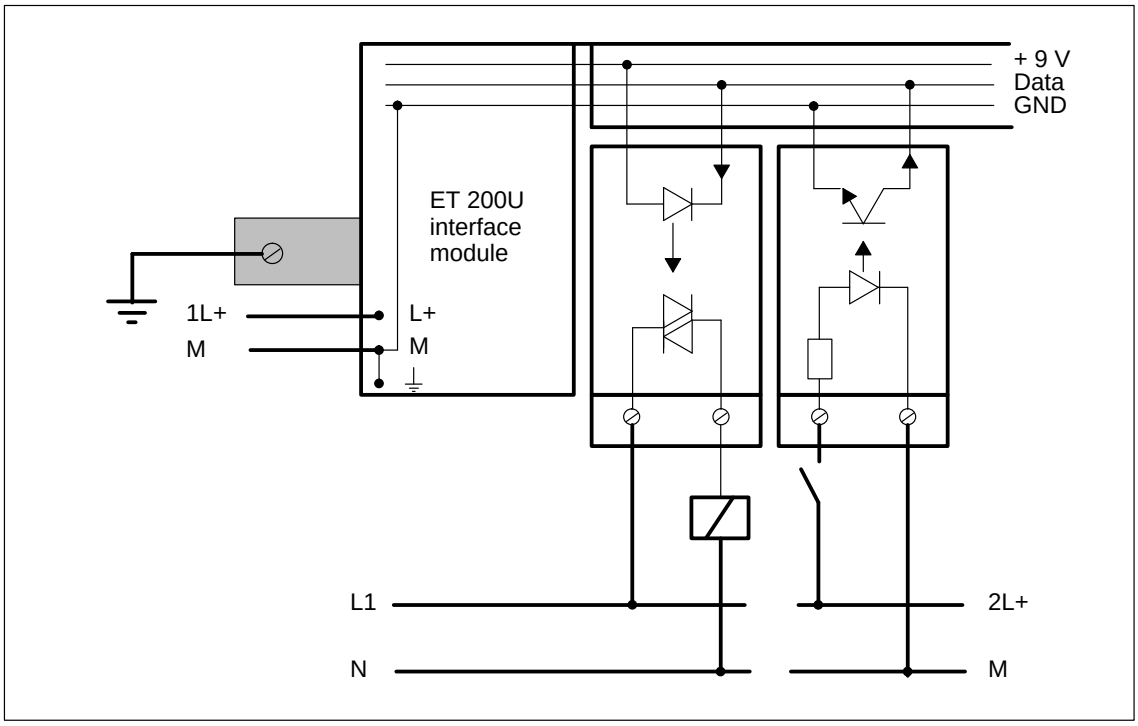

Figure 3-22 Simplified Illustration of a Configuration with Floating I/O Modules

ET 200U(DP Siemens): Address Assignment, Starting Up and Diagnosing Faults Using COM ET 200

4

Prerequisites for this Chapter 4-1
In this Chapter 4-1
For Reference 4-1
What is DP Siemens? 4-2
Requirements for Operation 4-2

4.1 Assigning Addresses Using COM ET 200 4-3
In this Section 4-3

4.1.1 Using the CONFIGURING Screen for ET 200U(DP Siemens) 4-4
“Station Number” 4-5
“Area” 4-6
“Station Type” 4-6
“Next Available Address” 4-7
Special Address Assignment Conditions 4-7
Condition 1 4-8
Condition 2 4-8
Example Division of the Digital/Analog I/O Areas 4-8
Configuring 4-9
DP Siemens Address ID 4-9
Finish Configuration 4-14

4.1.2 How to Proceed if the Configuration is Modified at a Later Point 4-15
Expanding the Slave Station at a Later Point 4-15
Expanding an Already Configured Slave Station 4-15
Modifying an Already Configured Slave Station 4-16

4.2 Starting Up and Testing with COM ET 200 for ET 200U(DP Siemens) . . . 4-17
In this Section 4-17

4.2.1 Setting the Station No. and Switch 8 4-18
Setting the Station Number 4-18
Setting Switch 8 4-19

4.2.2 Starting Up an ET 200U Slave Station 4-20

4.2.3 Using the SYSTEM START–UP/TEST Screen for an ET 200U(DP Siemens) Slave Station 4-21
STATUS/FORCE Function 4-23
STATUS Function 4-23
FORCE Function 4-23
FORCE with Load Circuit 4-23

4.3 Diagnosing Faults for ET 200U(DP Siemens) 4-25
In this Section 4-25

4.3.1 Using LEDs to Diagnose Problems 4-26

4.3.2 Using COM ET 200 to Diagnose Problems 4-27

4.3.3 Diagnosing Faults with STEP 5 (Station Diagnostics) 4-29
General Remarks on Diagnostics 4-29
Special Features of Requesting Diagnostics Using Page Addressing . . . 4-29
Structure and Request of Station Diagnostics for ET 200U 4-30
Request Station Status 4-31
Read Station Status 4-31
Request Manufacturer Identification 4-33
Request Station Diagnostics 4-34
Read Station Diagnostics 4-34
Request Module Diagnostics 4-35
Read Module Diagnostics 4-35

Figures

4-1	ET 200U(DP Siemens): CONFIGURING Screen (1)	4-4
4-2	ET 200U(DP Siemens): CONFIGURING screen (2)	4-5
4-3	ET 200U(DP Siemens): CONFIGURING Screen (3)	4-6
4-4	Example of Process I/O Image with ET 200	4-7
4-5	Location of the Bank of Switches for Setting the Station Number	4-18
4-6	SYSTEM START–UP/TEST: MODULE SELECTION Screen	4-21
4-7	SYSTEM START–UP/TEST: STATUS/CONTROL Screen	4-22
4-8	Fault LEDs on the IM 318–B Interface Module	4-26
4-9	DIAGNOSTICS: OVERVIEW screen	4-27
4-10	INDIVIDUAL DIAGNOSTICS Screen	4-28
4-11	Structure of the Diagnostics Word after Request of the Station Status (Station Status 1 and Station Status 2)	4-32
4-12	Structure of the Diagnost. Word after Request of the Station Status (Station Status 3 and Master Address)	4-32
4-13	Structure of the Diagnostics Word after Request of the Manufacturer Identification	4-33
4-14	Structure of the Diagnostics Word after Request of Station Diagnostics	4-34
4-15	Structure of the Diagnostics Word after Request of Module Diagnostics (Header and Slots 0 to 7)	4-35
4-16	Structure of the Diagnostics Word after Request of Module Diagnostics (Slots 8 to 15 and 16 to 23)	4-36
4-17	Structure of the Diagnostics Word after Request of Module Diagnostics (Slots 24 to 31)	4-36

Tables

4-1	Address IDs for the Modules in an ET 200U(DP Siemens) Station	4-10
4-2	Address IDs for the Modules in an ET 200U(DP Siemens)	4-11
4-3	Address IDs for the Modules in an ET 200U(DP Siemens)	4-12
4-4	Address IDs for the Modules in an ET 200U(DP Siemens)	4-13
4-5	Function of Switch 8	4-19
4-6	Resetting Outputs with Load Circuit Turned on	4-24
4-7	LED Fault Messages from IM 318–B	4-26
4-8	Diagnostics with STEP 5	4-29
4-9	Structure of Station Diagnostics and Module Diagnostics	4-30

ET 200U(DP Siemens): Address Assignment, Starting Up and Diagnosing Faults Using COM ET 200

4

Prerequisites for this Chapter

This chapter is based on the **"ET 200 Distributed I/O System"** Manual.

The fundamentals of the COM ET 200 are described in the **"ET 200 Distributed I/O System"** Manual.

A major feature of COM ET 200 is the address assignment. Notes on the type of address assignment (linear addressing or page addressing) are given in the "**ET 200 Distributed I/O System**" Manual.

Address assignment, starting–up and the fault diagnosing procedures depend on the type of slave station. This chapter deals with the procedures applicable for ET 200U(DP Siemens), using COM ET 200.

In this Chapter

This chapter describes how to use COM ET 200 and STEP 5 for an ET 200U(DP Siemens) module:

The following features are described:

- Address assignment using the CONFIGURING screen (→ Section 4.1)
- Starting–up and testing using the START–UP/TEST screen (→ Section 4.2)
- Diagnosing faults using the DIAGNOSTICS screen (→ Section 4.3)

For Reference

To quickly look up important parameters, please refer to:

- Address IDs for ET 200U(DP Siemens) (→ Table 4-1, → Section 4.1.1)
- Setting the station number and switches (bank of switches) (→ Section 4.2.1)
- Explanation of LEDs (→ Table 4-7, → Section 4.3.1)
- Diagnostics word for ET 200U(DP Siemens) (→ Table 4-9, → Section 4.3.3)

What is DP Siemens?

DP Siemens is explained in detail in Chapter 1.

An ET 200U interface module with the Order No.

- 6ES5 318–8MB11

  or

- 6ES5 318–8MB12 (which operates as a "6ES5 318–8MB11" using the "DP Siemens" bus protocol)

is called ET 200U(DP Siemens).

DP Siemens is the bus protocol developed by Siemens. In cooperation with the PROFIBUS User Organization, this bus protocol has been extended into an open and, multi–vendor system. This extended bus protocol has been filed with the German Electrotechnical Commission (DKE) and it has been passed as National draft standard DIN 19245, Part 3.

For details on ET 200U(DP Standard), please refer to Chapter 5.

The ET 200U with the Order No. 6ES5 318–8MB12 is able to use both protocols. To set the required bus protocol, use switch 8 on the bank of switches. The bank of switches is described in Section 4.2.1.

Requirements for Operation

An ET 200U(DP Siemens) can be started up using any version or revision level of COM ET 200 and the IM 308–B master interface module.

Note

It is always possible to operate the ET 200U(DP Siemens) and ET 200U(DP Standard) distributed I/O units in parallel on one bus.

4.1 Assigning Addresses Using COM ET 200

In this Section

This section describes the typical address assignment for ET 200U(DP Siemens).

You will learn how to use the COM ET 200 CONFIGURING screen to configure the ET 200U(DP Siemens) distributed I/O station.

Section 4.1.1 deals with configuring the ET 200U(DP Siemens).

Section 4.1.2 deals with special configuring requirements.

4.1.1 Using the CONFIGURING Screen for ET 200U(DP Siemens)

In the CONFIGURING screen, you assign for each ET 200U(DP Siemens):

- the specific modules to specific slots of the slave station

  and

- the start addresses of the individual modules.

The following steps describe the procedure you must follow to configure your ET 200U slave station, from creating the configuration data to storing it:

1. Make the appropriate entries in the ET 200 SYSTEM PARAMETERS screen (→ "ET 200 Distributed I/O System" Manual).

After you confirm the ET 200 system parameters with the <F6> (ENTER) key

2. Press <F8> to return to the FUNCTIONS screen.
3. From the FUNCTIONS screen, press <F2> to go to the CONFIGURING screen.

Result: The CONFIGURING screen appears.

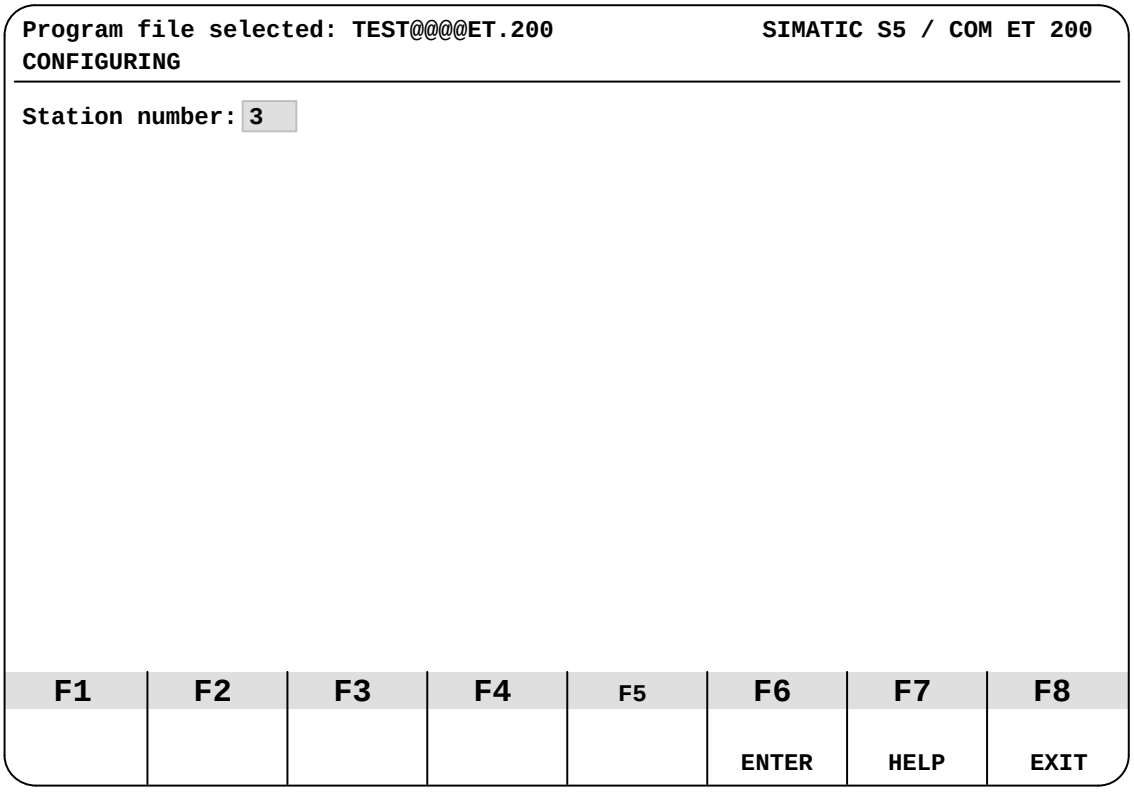

Figure 4-1 ET 200U(DP Siemens): CONFIGURING Screen (1)

"Station Number"

An ET 200U(DP Siemens) must have a station number only in the range from 3 to 124. You **cannot** enter the station number of an additional active station here (if you specified one in the ET 200 SYSTEM PARAMETERS screen).

When pressing <F7> (HELP) – the cursor must be positioned in the "station number" field – a window is displayed showing all station numbers and station types assigned so far. You can select a station and output its configuration. If station numbers have not been assigned yet, the message NO STATIONS CONFIGURED is output.

4. If necessary, correct the station number that appears on the screen and press <F6> (ENTER) to complete your entry.

Result: If the station whose number you entered has already been configured, its configuration appears on the screen after you complete your entry.

If the station whose number you entered has not already been configured, two additional entry fields appear:

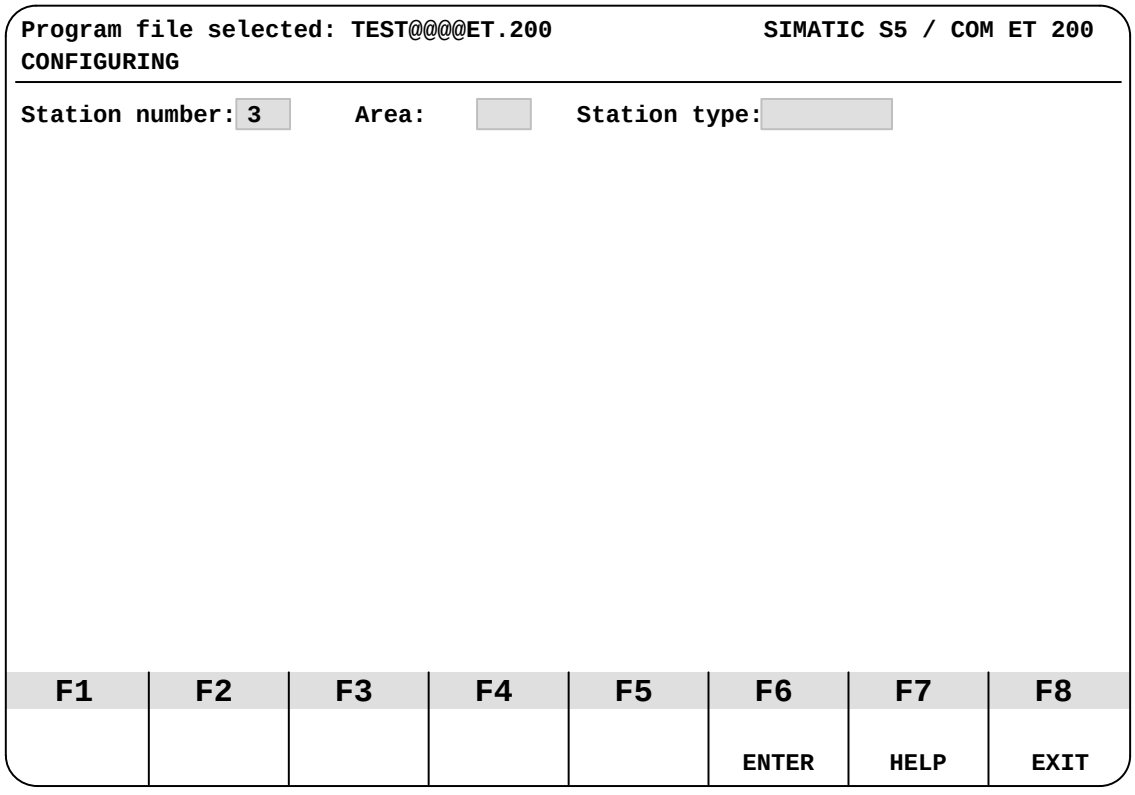

Figure 4-2 ET 200U(DP Siemens): CONFIGURING screen (2)

"Area"

If you entered "N" for the ET 200 system parameter "Dual–port RAM addr.", you must select one of the permissible areas for linear addressing (P or Q).

If you entered "Y" for the ET 200 system parameter "Dual–port RAM addr.", you must enter the abbreviation of the peripheral area (P or Q) and the dual–port RAM page number. The permissible dual–port RAM page numbers are derived from the basic dual–port RAM page number).

Examples: "**P0**" for dual–port RAM page number 0 in the P peripheral area.

"**Q1**" for dual–port RAM page number 1 in the Q peripheral area.

"Station Type"

Press <F7> (HELP) to select the station type:

5. If you want to configure an ET 200U(DP Siemens), select "ET 200U".
6. Press <F6> (ENTER) to confirm your entries..

Result: COM ET 200 accepts the entries and fills the screen (1: Configuration field):

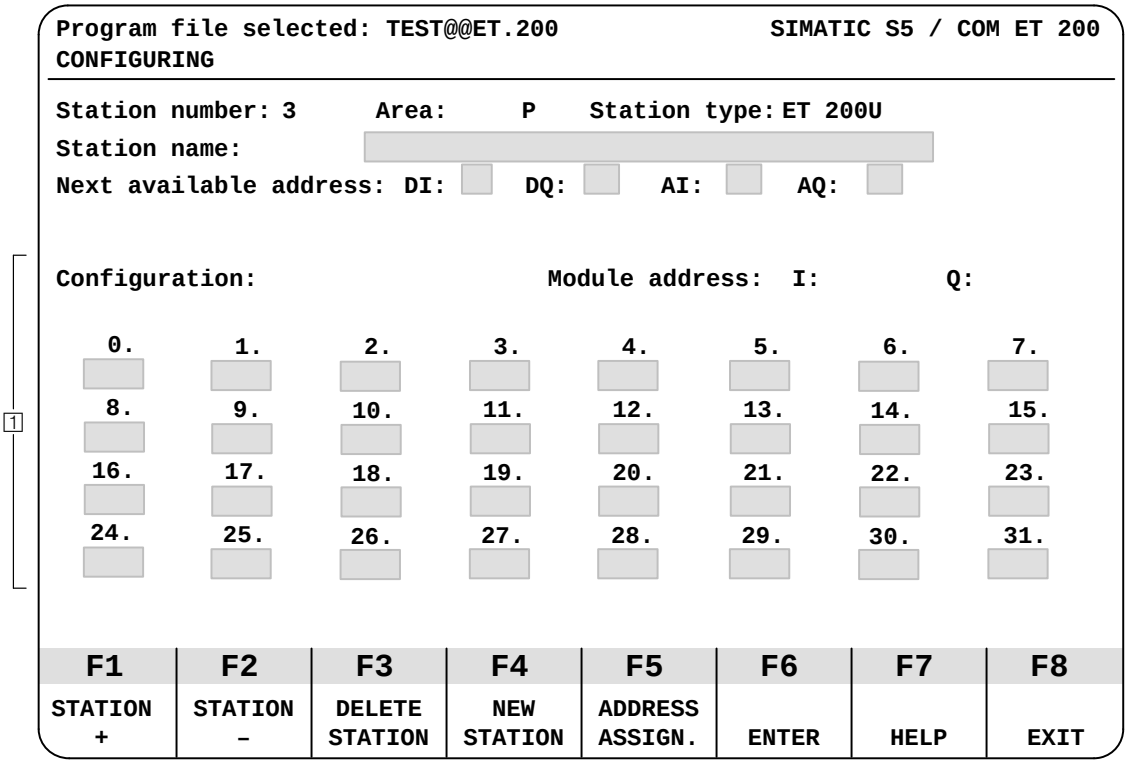

Figure 4-3 ET 200U(DP Siemens): CONFIGURING Screen (3)

7. Assign a station name if desired (all keyboard characters are permissible).

"Next Available Address"

Under the "Station name" field is the "Next available address" field with areas for four entries. When you configure for the first time in the program file that you set up, all four first available addresses are assigned as 0.

If a slave station has already been configured, each entry field shows the address of the first available byte for the following areas:

DI (digital input modules)

DQ (digital output modules)

AI (analog input modules)

AQ (analog output modules)

COM ET 200 updates the "Next available address" input fields immediately after you enter a valid address ID for a slot in the "Configuration" field of this screen.

However, before you configure an ET 200U (DP Siemens) slave station, you must take the following steps:

- Separate the areas for digital and analog modules so that addresses do not overlap. Communications processors (CPs) and intelligent I/O modules (IPs) count here as analog modules.
- Determine the structure of your stations. Additions and changes that you make later result in address assignments that can be confusing to read or otherwise unclear.

Special Address Assignment Conditions

CPUs 941, 942, 943 and 944 of the S5–115U/H PLC series generate the process I/O image word–by–word. This may result in

- two slave stations being addressed within one word

  or

- the address of the first slave station ending exactly in the middle of one word and the address of the second slave station starting at the same position.

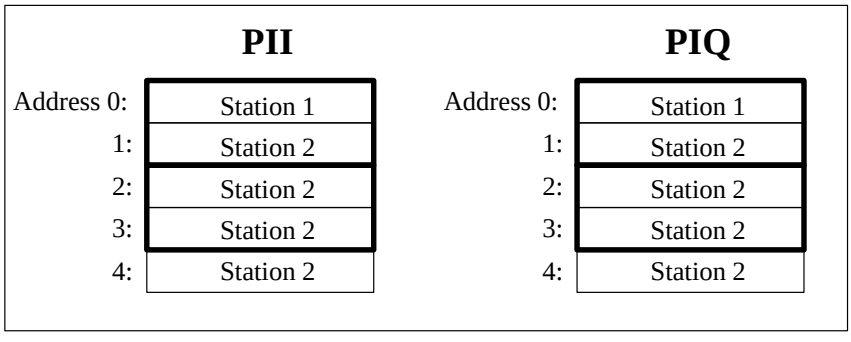

Figure 4-4 Example of Process I/O Image with ET 200

If an input/output value is read in via the **process I/O image**, the following conditions may result:

Condition 1

Assumption: Failure of station 1 in the PII or in the PIQ

The CPUs 941 to 944 detect a failure of station 1 since they read in/write the process I/O image word–by–word. Therefore, the CPUs do **not** read/write address 0 in the process I/O image of station 2, although station 2 is available.

The CPU stops with timeout (if in COM ET 200 "timeout = yes"). After a transition from STOP to RUN, the CPU switches again to RUN. Station 1 and address 1 of station 2 are not entered in the process I/O image.

Condition 2

Assumption: Failure of station 2

PII: The CPUs 941 to 944 detect a failure of station 2 since they read in the process I/O image word–by–word.

The CPU stops with timeout (if in COM ET 200 "timeout = yes"). The CPU remains in the STOP mode even after a transition from STOP to RUN.

PIQ: The CPUs 941 to 944 detect a failure of station 2 since they read in/write the process I/O image word–by–word. Therefore, the CPUs do **not** read/write address 0 in the process I/O image of station 1, although station 1 is available.

The CPU stops with timeout (if in COM ET 200 "timeout = yes"). After a transition from STOP to RUN, the CPU switches again to RUN. Station 2 and address 0 of station 1 are not entered in the process I/O image.

Note

To avoid the above conditions, note the following when addressing CPUs 941 to 944:

1. Use load and transfer commands. These commands work on a byte–by–byte basis and are thus able to identify the presence of each individual byte.
2. Assign an even number as address start in a slave station (e.g. 0, 2, 4, 6, ...) and do not use the uneven address numbers. This enables you to access the process I/O image.

Example Division of the Digital/Analog I/O Areas

Example division of the digital and analog I/O areas:

1. Accept "0" as the next available address for DI and DQ modules.
2. Enter "128" as next available address for AI and AQ modules.

This division corresponds to the usual SIMATIC division of the P area. However, you can separate the areas according to your needs.

Configuring

The numbers above the input fields in the “Configuration” field designate the slots of the ET 200U (DP Siemens) slave station.

1. Assign a proper address ID to each module in the ET 200U(DP Siemens) station (see following tables). Assign the slots in ascending order. Do not skip any slot. If you have a slot that you are not going to use, enter “000” as the address for that slot.

Note

Please refer to Section 3.1 for the numbering of slots in case of a multi–tier configuration.

If you are using page addressing, note the following:

With page addressing, peripheral byte 255 is assigned for selecting the page.

DP Siemens Address ID

You can use more than one alternatives to enter the address ID of an ET 200U(DP Siemens) station:

- as decimal number

  or

- as module code, e.g. 8DE or 1AE. COM ET 200 automatically converts the module code into a decimal number

  or

- press <F7> (HELP) to obtain a list of all available I/O modules with address ID. You can then select the required ID (first position the cursor in the address ID input field).

Note

ET 200U(DP Standard) and ET 200U(DP Siemens) use different decimal address IDs.

Table 4-1 Address IDs for the Modules in an ET 200U(DP Siemens) Station

Order Number of Module	Address ID ET 200U (DP Siemens)	Address Scope (Byte)	Delay Time (ms)[1]	Address Area	Current Consumption (mA)	Power Loss (W)
Digital Inputs 6ES5 ...:						
420–8MA11	4DI or 008	1	2.5 to 5	Digital	16	0.8
421–8MA12	8DI or 009	1	2.3 to 4.5	Digital	34	1.6
422–8MA11	027	2*	3 to 4	Digital or analog	50	4.5
430–8MB11	4DI or 008	1	1.4 to 5	Digital	5	2
430–8MC11	4DI or 008	1	10 to 20	Digital	16	2.8
430–8MD11	4DI or 008	1	10 to 20	Digital	16	2.5
431–8MA11	8DI or 009	1	4 to 5.5	Digital	32	2
431–8MC11	8DI or 009	1	10 to 20	Digital	32	2.5
431–8MD11	8DI or 009	1	10 to 20	Digital	32	3.6
433–8MA11	8DI or 009	1	1 to 10	Digital	6	2.4
437–8EA12	4DI or 008	1	40	Digital	50	0.45
Digital Outputs 6ES5 ...:						
440–8MA11	048	1	< 1	Digital	15	3
440–8MA21	048	1	< 1	Digital	15	4.8
441–8MA11	8DQ or 017	1	< 1	Digital	14	3.5
450–8MB11	048	1	< 1	Digital	15	5
450–8MD11	4DQ or 016	1	< 1	Digital	14	3.5
451–8MA11	8DQ or 017	1	< 1	Digital	24	4
451–8MD11	8DQ or 017	1	< 1	Digital	25	3.5
451–8MR11	8DQ or 017	1	< 1	Digital	30	1.6
451–8MR12	8DQ or 017	1	< 1	Digital	30	1.6
452–8MR11	4DQ or 016	1	< 1	Digital	14	2
453–8MA11	8DQ or 017	1	< 1	Digital	20	1
457–8EA12	048	1	< 1	Digital	55	0.5

* The address scope is necessary for the inputs and the outputs (i.e. if the address scope is 2 bytes, 2 bytes are used for the inputs and 2 bytes are used for the outputs). Since COM ET 200 assigns the addresses for these modules optionally, inputs and outputs can have different start addresses.

1 For an input module, the delay time is the time between a signal change at an input and a change of state on the I/O bus. For an output module, the delay time is the time between a signal change on the I/O bus and a change of state at an output.

Table 4-2 Address IDs for the Modules in an ET 200U(DP Siemens)

Order Number of Module	Address ID ET 200U (DP Siemens)	Address Scope (Byte)	Delay Time (ms)[1]	Address Area	Current Consumption (mA)	Power Loss (W)
Analog Inputs 6ES5 ...:						
464–8MA11[1]	1–channel:	1–ch.:	1–channel:	Analog	70	0.7
464–8MA21[1]	1AI or 012,	2	60		100	0.7
464–8MB11[1]	2–channel:	2–ch.:	2–channel:		70	0.7
464–8MC11[1]	2AI or 013,	4	120		70	0.7
464–8MD11[1]	4–channel:	4–ch.:	4–channel:		70	0.7
464–8ME11[1]	4AI or 015	8	240		70	0.7 to 1
464–8MF11[2]	1–channel: 1AI or 012,	1–ch: 2	1–channel: 60	Analog	70	0.9
464–8MF21[2]	2–channel: 2AI or 013	2–ch.: 4	2–channel: 120	Analog	100	0.9
466–8MC11	2AI or 013	4	20	Analog	100	0.9
467–8EE11[2]	1–channel: 1AI or 012, 2–channel: 2AI or 013	1–ch.: 2 2–ch.: 4	1–channel: 2–channel:	Analog	320	0.7 to 3
Analog Outputs 6ES5 ...:						
470–8MA11	2AQ or 021	4	0.1	Analog		3.1
470–8MA12	2AQ or 021	4	0.15	Analog		3.1
470–8MB11	2AQ or 021	4	0.1	Analog		3.8
470–8MB12	2AQ or 021	4	0.15	Analog		3.8
470–8MC11	2AQ or 021	4	0.1	Analog		3.8
470–8MC12	2AQ or 021	4	0.15	Analog		3.8
470–8MD11	2AQ or 021	4	0.1	Analog		3.1
470–8MD12	2AQ or 021	4	0.15	Analog		3.1
470–8MD21	2AQ or 021	4		Analog		
477–8EC11	2AX or 029	4*		Analog	350	3.2

* The address scope is necessary for the inputs and the outputs (i.e. if the address scope is 2 bytes, 2 bytes are used for the inputs and 2 bytes are used for the outputs). Since COM ET 200 assigns the addresses for these modules optionally, inputs and outputs can have different start addresses.

1 With these analog modules, you can use one, two, or four channels.

2 With these analog modules, you can use one or two channels.

Table 4-3 Address IDs for the Modules in an ET 200U(DP Siemens)

Order Number of Module	Address ID ET 200U (DP Siemens)	Address Scope (Byte)	Delay Time (ms)[1]	Address Area	Current Consumption (mA)	Power Loss (W)
Input/Ouput Module:						
482–8MA11 –8MA12 –8MA13	027	2*		Digital or analog	50	4.5
Power Supply Module:						
935–8ME11[1]	4DI/4DI or 008/008	–		Digital		7.5
Simulator Module:						
788–8MA11	8DI or 009	1	< 0.2	Digital	30	0.3
	8DQ or 017					
Timer Module:						
380–8MA11	4DX or 024	1*		Digital	10	
Counter Modules:						
385–8MA11	4DX or 024	1*	0.18	Digital	20	2.5
385–8MB11	2AX or 029	4*		Analog	70	1.9
Comparator Module:						
461–8MA11	4DI or 008	1	5	Digital	35	0.3
PID Controller Modules:[2]						
262–8MA11 –8MA12	223	8*	100 to 200	Analog	20	
262–8MB11 –8MB12	223	8*	100 to 200	Analog	20	
Position Control Modules:						
263–8MA11[1]	223/000	8*		Analog	120	4
266–8MA11	223	8*		Analog		
267–8MA11	093	4*		Analog	150	

* The address scope is necessary for the inputs and the outputs (i.e. if the address scope is 2 bytes, 2 bytes are used for the inputs and 2 bytes are used for the outputs). Since COM ET200 assigns the addresses for these modules optionally, inputs and outputs can have different start addresses.

1 The module occupies 2 slots.

2 You can address a PID controller module in an ET 200 system **at least** every 200 ms. You cannot use function blocks FB61 and FB62.

Table 4-4 Address IDs for the Modules in an ET 200U(DP Siemens)

Order Number of Module	Address ID ET 200U (DP Siemens)	Address Scope (Byte)	Delay Time (ms)[1]	Address Area	Current Consumption (mA)	Power Loss (W)
IP 264 Electronic Cam Controller:						
264–8MA11[1]	223/000	8*		Analog	120	4
IP 265 High Speed Sub Control :						
265–8MA01[2]	223	8*		Analog		
CP 521 BASIC:						
521–8MB11	223	8*		Analog	180	1.6
CP 521 SI:						
521–8MA21	223	8*		Analog	140	1.2
330–8MA11 or no module plugged in	000	0	0			

* The address scope is necessary for the inputs and the outputs (i.e. if the address scope is 2 bytes, 2 bytes are used for the inputs and 2 bytes are used for the outputs). Since COM ET200 assigns the addresses for these modules optionally, inputs and outputs can have different start addresses.

1 The module occupies 2 slots.

2 IP 265 can be operated in Slow Mode only. Please refer to Section 4.2.1 for the Slow Mode setting.

When configuring, if you put the cursor in an input field of a slot that has already been configured, COM ET 200 automatically fills in the module start addresses in the

"Module address: I: Q: "

output field as follows:

- In the "I" field

  module start address for the input modules

- In the "Q" field

  module start address for the output modules

Finish Configuration

After you have defined the parameters, configuration is completed:

1. Press <F6> (ENTER) to confirm the configuration for each configured station.

Result: The configuration is stored in the file that has been preset.

COM ET 200 automatically guarantees that areas that must be transferred consistently are also marked as consistent areas (e.g. that each analog value is transferred separately in one message frame, i.e. consistently over an area of two bytes).

By pressing the function keys you can activate the following functions:

If you want to do the following:	Then press the following key:	Name of the function key
Display the configuration of the next higher (configured) station	<F1>	STATION +
Display the configuration of the next lower (configured) station	<F2>	STATION –
Delete the configuration of the station that you are currently configuring	<F3>	DELETE STATION
Configure a new station (COM ET 200 selects the number of the next nonconfigured station automatically)	<F4>	NEW STATION
Switch to the STATION–ORIENTED ADDRESS ASSIGNMENT screen	<F5>	ADRESS ASSIGN.
Confirm the station configuration that you just input	<F6>	ENTER
Know what entries are permitted in a specific input field	<F7>	HELP
Return to the FUNCTIONS screen	<F8>	EXIT

4.1.2 How to Proceed if the Configuration is Modified at a Later Point

Expanding the Slave Station at a Later Point

You know what the final configuration of a station will be, but you do not have all the modules available, or you want to add some modules later.

1. Configure the station according to your final plan. In this way you specify the module start addresses for all the I/O modules initially, even for those that you have not added on yet.
2. Press <F6> (ENTER) to confirm the configuration.
3. Put the cursor in the input field for the slot that is not occupied yet.
4. Overwrite the address ID with “000”.
5. Press <F6> (ENTER) to reconfirm the configuration.

Overwriting the address ID with “000” maintains the address space for the original module.

When you plug in the missing module later, you must reconfigure as follows:

1. Replace the “000” ID with the original address ID.
2. Press <F6> (ENTER) to confirm the configuration.

Expanding an Already Configured Slave Station

You want to add some I/O modules to a station that you have already configured.

1. In the CONFIGURING screen, press <F4> (NEW STATION) to select the number of the station that you want to expand.

COM ET 200 displays the configuration of the selected station. The “1st available address” input field shows the address that will be assigned to the additional module.

2. Enter the address ID of the additional module at the next available slot.
3. Press <F6> (ENTER) to confirm the configuration.

After you enter the new configuration, additional modules may have addresses that are out of sequence with the addresses of the originally configured modules.

Modifying an Already Configured Slave Station

You want to replace one module with a different module in a station that you have already configured.

1. In the CONFIGURING screen, press <F4> (NEW STATION) to select the number of the station that you want to change.

COM ET 200 displays the configuration of the selected station. The “1st available address” input field shows the address that will be assigned to the new module.

2. Overwrite the address ID of the old module with the address ID of the new module.
3. Press <F6> (ENTER) to confirm the configuration.

The new module has a module start address that is not consecutive in the order of the addresses of the stations that you configured previously. The start address reflects a jump in addressing.

The address space that the old module took up is **released** and could be used for a module with the same address ID. If you wanted to put a module in such a slot, you would have to edit the “1st available address” field. However, this is not recommended.

4.2 Starting Up and Testing with COM ET 200 for ET 200U(DP Siemens)

In this Section

The following describes

- How the station number and switch 8 are set (→ Section 4.2.1)
- How you connect the ET 200U to the programmer (→ Section 4.2.2)

  and
- How you use the COM ET 200 “START–UP/TEST” screen (→ Section 4.2.3).

4.2.1 Setting the Station No. and Switch 8

Setting the Station Number

Use the bank of switches of the ET 200U interface module to set the station number of your ET 200U station (→ Figure 4-5). Set the station number in binary code. Each of the first seven switches on the bank of switches has a different positional value.

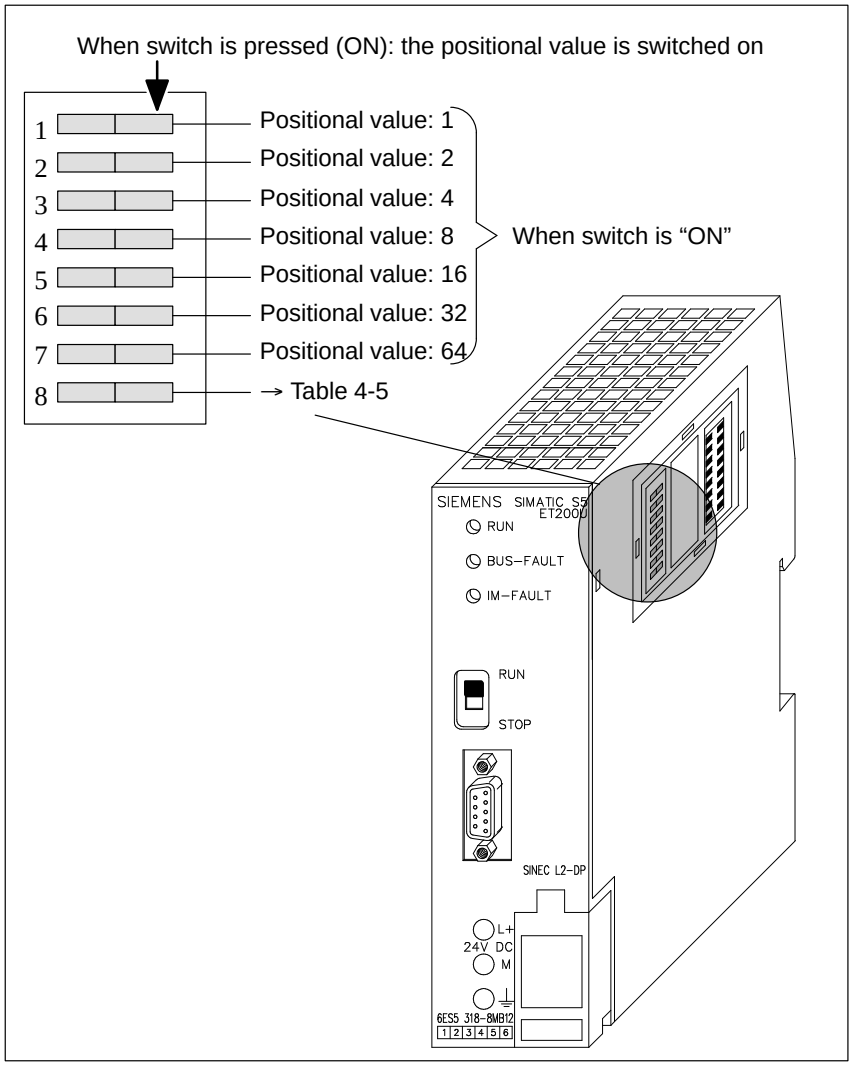

Figure 4-5 Location of the Bank of Switches for Setting the Station Number

Setting Switch 8

The function of switch 8 varies, depending on the ET 200U interface module ordered:

Table 4-5 Function of Switch 8

Order No.	Function
318–8MB11	**ON**: The I/O bus speed is reduced (“Slow Mode”).
318–8MB12	**DP–Norm (DP Standard)**: Bus protocol to Draft Standard PROFIBUS–DP (can be used as from COM ET 200 version 4.0). **DP–Siemens**: Bus protocol to DP Siemens. The ET 200U automatically switches into the slow mode when it identifies an IP 265.

Example

Set station number 52 and DP–Siemens:

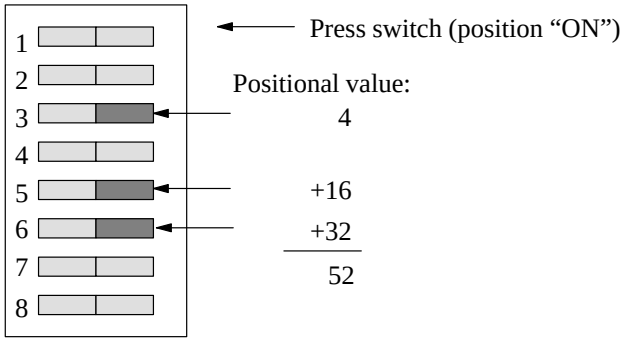

4.2.2 Starting Up an ET 200U Slave Station

After setting the station number on the bank of switches on the IM 318–B interface module, proceed as follows to start up and test your ET 200U slave station:

1. Use a CP 5410 S5–DOS/ST programmer–bus interface to link your programmer directly to the ET 200U interface module.
2. Call up the SYSTEM START–UP/TEST screen of the COM ET 200 software package (press <F5> in the FUNCTIONS screen).
3. In the

   Station number:

   input field, enter the number of the connected ET 200U slave station.
4. Press <F6> (ENTER) to confirm the input.

Result: COM ET 200 establishes a link to the connected station, assigns parameters to the station, and displays the SYSTEM START–UP/TEST: MODULE SELECTION screen if the configuration in the program file and the actual station configuration match.

If the two configurations do not match, COM ET 200 reports an error in the message line. In such a case, you must go to the CONFIGURATION screen to correct the station configuration.



Caution

If you use a programmer on the bus to start up an ET 200U slave station while the bus is operating continuously, note the following: The IM 308–B interface module (in the master station) cannot control the slave station as long as the programmer has access to the slave station.

The following section describes the start–up and test for an ET 200U(DP Siemens) slave station.

4.2.3 Using the SYSTEM START–UP/TEST Screen for an ET 200U(DP Siemens) Slave Station

For starting up an ET 200U slave station, COM ET 200 provides two screens.

Select up to 6 slots in the SYSTEM START–UP/TEST: MODULE SELECTION screen. Then call up the SYSTEM START–UP/TEST: STATUS/CONTROL screen.

Proceed as follows:

1. Using the cursor control keys and <F5> (SELECT), select a maximum of 6 slots (modules) whose input data you want to evaluate or whose outputs you want to force.

   Result: The selected modules are marked with an asterisk "*". Pressing <F5> (SELECT) a second time cancels the selection.

```
Program file selected: TEST@@ET.200                SIMATIC S5 / COM ET 200
SYSTEM START–UP / TEST: MODULE SELECTION
-------------------------------------------------------------------------------
Station number: 4                                  Station type: ET 200U
Station name:          PRESS



Configuration:

   0.*     1.*     2.*     3.*     4.*     5.*     6.      7.
  027     4AX     4DI     4DQ     8DX     4AI     4AI

   8.      9.     10.     11.     12.     13.     14.     15.

  16.     17.     18.     19.     20.     21.     22.     23.

  24.     25.     26.     27.     28.     29.     30.     31.


+------+------+------+------+------+------+------+------+
|  F1  |  F2  |  F3  |  F4  |  F5  |  F6  |  F7  |  F8  |
|      |      |      |      |SELECT|ENTER |      | EXIT |
+------+------+------+------+------+------+------+------+
```

Figure 4-6 SYSTEM START–UP/TEST: MODULE SELECTION Screen

2. Press <F6> (ENTER) to confirm the selection.

Result: The SYSTEM START–UP/TEST: STATUS/CONTROL screen appears:

```
Program file selected: B:TEST@@ET.200              SIMATIC S5 / COM ET 200
SYSTEM START–UP / TEST: STATUS/CONTROL

Station number: 4                                  Station type: ET 200U
Station name:          PRESS
Station diagnostics:   Station cannot be controlled by PLC

 Slot      Type      Outputs                  Inputs                  Diagnost.

    00     027     KM= 00000000  00000000    KM= 01000100  01011100     *
    01     4AX     KH= 0000 0000 0000 0000   KH= 10E0 0032 0104 0014
    02     4DI                               KM= 0000
    03     4DQ     KM= 0000
    04     8DX     KM= 00000000              KM= 00001110
    05     4AI                               KH= 0004 0012 101B 1AA4

 F1      F2      F3      F4      F5      F6      F7      F8

                                         ENTER   HELP    EXIT
```

Figure 4-7 SYSTEM START–UP/TEST: STATUS/CONTROL Screen

STATUS/FORCE Function

Press<F7> (HELP) to change KF format (fixed point number) to KH format (hexadecimal number) and vice versa.

3. Specify the status of the outputs that you want to force. Press <F6> (ENTER) to confirm the status.

Result: At the end of every cycle, COM ET 200 transfers output data to the selected station. The software requests input data and (station) diagnostics data. If problems occur, fault messages appear as text in the STATION DIAGNOSTICS field.

The assignment of the function keys changes:

F1	F2	F3	F4	F5	F6	F7	F8
					STOP		EXIT

To freeze the screen, that is, to stop the update of the input fields, proceed as follows:

4. Press <F6> (STOP).

Now you can set the outputs again.

STATUS Function

COM ET 200 displays the state of the inputs in the INPUTS field in KM format for digital modules or in KH format for analog modules.

Example

Inputs for a 464–8MA21 module (module ID 4AI, analog module):

Channel	4	3	2	1
KH =	**0001**	**1E00**	**00A0**	**0250**

FORCE Function

In the OUTPUTS field, you can change the state of individual outputs (always shown as 0 when this screen appears). COM ET 200 displays the state of the outputs in KM format for digital modules or in KH format for analog modules.

Example

Outputs for a 482–8MA12 module (module ID 027, digital module):

Bit	15	8	7	0
KM =	**0110**	**0010**	**0001**	**0001**

FORCE with Load Circuit

You can execute the FORCE function with the load circuit turned on or off as follows:

FORCE with load circuit **turned off** :You can observe the effect of the forced outputs for digital modules by checking the output LEDs.

FORCE with load circuit **turned on** :You can observe the effect of the forced outputs directly at the I/Os.



Caution

Setting outputs when the load circuit is turned on can result in dangerous system states.

Set or reset outputs only under the circumstances listed in the following table!

Table 4-6 Resetting Outputs with Load Circuit Turned on

Version	Outputs are Reset ...	Outputs are not Reset ...
IM 308–B (up to version 4) or E(E)PROM programmed as version ≤ 2*	• When you power up the IM 308–B master interface module (STOP → RUN transition) • When you call up the “MODULE SELECTION” screen. • When you reset the outputs in the “MODULE SELECTION” screen. • When you exit from the “MODULE SELECTION” screen with <F8> (EXIT).	
IM 308–B (from version 5) and E(E)PROM programmed as version ≥ 3*	• When you call up the “MODULE SELECTION” screen. • When you reset the outputs in the “MODULE SELECTION” screen. • When you exit from the “MODULE SELECTION” screen with <F8> (EXIT).	• When you power up the IM 308–B master interface module (STOP to RUN transition)

*: The E(E)PROM version is defined when programming the E(E)PROM. If you have selected <F3> (as in version 2) after the message “Evaluation of diagnosis in CPU to DP Standard? (<F3>: as in version 2)” has been displayed, the E(E)PROM is programmed as in version 2.

4.3 Diagnosing Faults for ET 200U(DP Siemens)

In this Section

This section describes three alternatives for diagnosing faults:

- Using LEDs to diagnose problems (→ Section 4.3.1)
- Using COM ET 200 to diagnose problems(→ Section 4.3.2)
- Diagnosing faults with STEP 5 (→ Section 4.3.3)

Diagnosing faults with COM ET 200 in a STEP 5 program is described in detail in the **"ET 200 Distributed I/O System"** Manual.

4.3.1 Using LEDs to Diagnose Problems

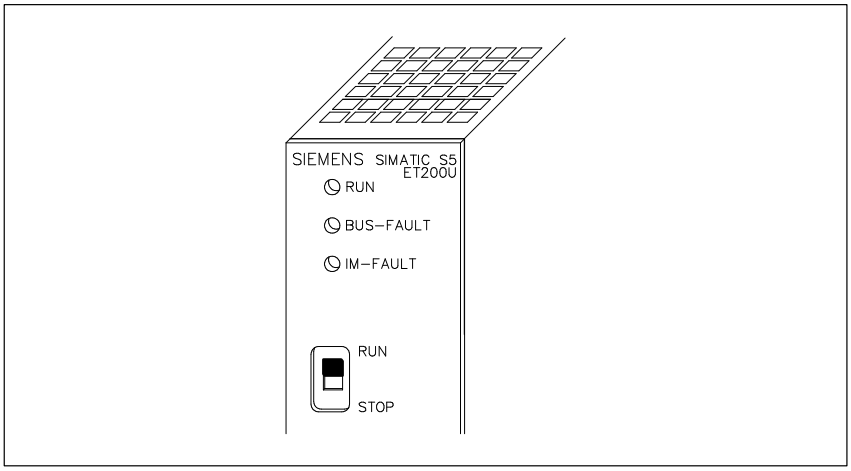

Figure 4-8 Fault LEDs on the ET 200U Interface Module

Table 4-7 LED Fault Messages on ET 200U Interface Module

LED	Optical Signal	Explanation
RUN	Lit	Normal operation (load voltage supply available)
BUS–FAULT	Lit	• Response time has run out and the IM 318–B interface module was not addressed. • During system start–up or power up: IM 318–B not parameterized yet. • No connection between SINEC L2–DP bus and slave station.
IM–FAULT	Lit or flashing	There is a fault in the I/O bus (e.g. a bus unit is defective).
BUS–FAULT and IM–FAULT	Lit	There is a hardware fault in the ET 200U interface module.
BUS–FAULT and IM–FAULT	Flashing	The configured station address is not within the permitted range (3 to 124).

4.3.2 Using COM ET 200 to Diagnose Problems

The COM ET 200 software provides the DIAGNOSTICS screen for diagnostics functions.

The following are prerequisites for using the diagnostics function:

- You have a programmer with a CP 5410 S5–DOS/ST programmer–bus interface connected to the SINEC L2–DP bus.
- You indicated “Programmer connected to the bus: Y” in the ET 200 SYSTEM PARAMETERS screen.

1. Press <F6> (DIAGNOSE) in the FUNCTIONS screen to call up the DIAGNOSTICS: OVERVIEW screen.

Result: The “DIAGNOSTICS: OVERVIEW” screen appears.

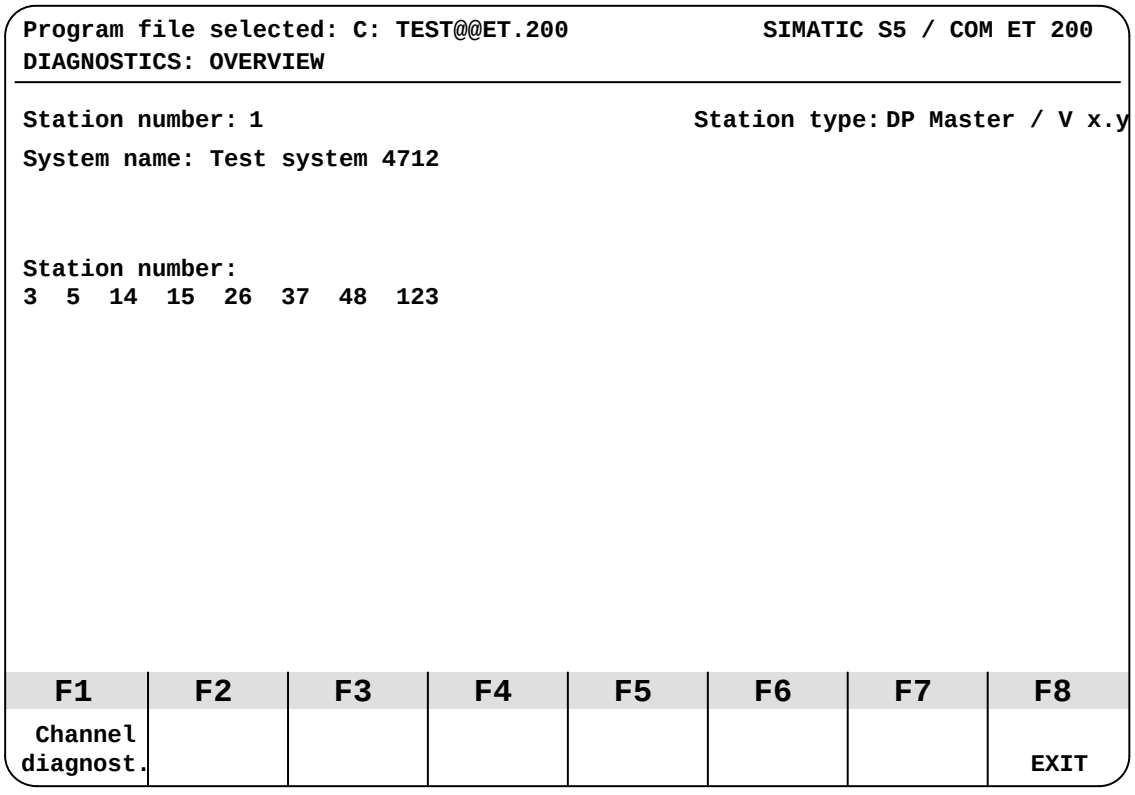

Figure 4-9 DIAGNOSTICS: OVERVIEW Screen

COM ET 200 displays the following:

- The station number and the system name of the master station
- The firmware version of the IM 308–B interface module (in the master station)
- The numbers of the stations for which diagnostics data is available

2. Press <F1> (CHANNEL DIAGNOST.)

Result: COM ET 200 asks for a station number.

3. In the STATION NUMBER input field, enter the number of the faulty station that you want to investigate further.
4. Press <F6> (ENTER) to be able to evaluate the diagnostics messages of this station.

Result: COM ET 200 goes to another screen. The screen that appears next depends on the type of station you are investigating.

```
Program file selected: TEST$$ET.200                SIMATIC S5 / COM ET 200
Individual Diagnostics
-------------------------------------------------------------------------

Station number: 123                                Station type: ET 200U
Station name:          Test station 1
Station diagnostics: Parameterization error


Configuration: Faulty modules are marked with '*'


  0.      1.*     2.*      3.      4.      5.      6.      7.
 8DI     8DI     8DQ      8DQ
  8.      9.     10.      11.     12.     13.     14.     15
                                                          .
 16.     17.     18.      19.     20.     21.     22.     23.

 24.     25.     26.      27.     28.     29.     30.     31.



 F1  |  F2  |  F3  |  F4  |  F5  |  F6  |  F7  |  F8
     |      |      |      |      |      |      |
     |      |      |      |      |      |      |  EXIT
```

Figure 4-10 INDIVIDUAL DIAGNOSTICS Screen

4.3.3 Diagnosing Faults with STEP 5 (Station Diagnostics)

General Remarks on Diagnostics

With STEP 5 you can systematically localize and evaluate a fault:

Table 4-8 Diagnostics with STEP 5

Diagnostics	...
Diagnostics overview	Records all stations which have diagnostics data pending.
Diagnostics for parameter assign. and addressability	Records all stations which can be parameterized and addressed.
Station status	Provides data on the status of the slave stations.
Station diagnostics	Provides general data on the status of the slave stations.
Module diagnostics	Localizes the defective module in the ET 200U slave station.

The diagnostics for parameter assignment and addressability and the diagnostics overview are described in the "**ET 200 Distributed I/O System**" Manual, as they are applied to all slave stations.

To avoid misunderstandings, the two diagnostics bytes of the diagnostics word are referred to in this chapter as the "diagnostics address" and "diagnostics address + 1". The load and transfer operations in this chapter refer to the default diagnostics address 252.

If more than one diagnostics message is displayed, the last message remains on the screen.

Special Features of Requesting Diagnostics Using Page Addressing

When using page addressing, the diagnostics word is located in the basic page. Before you request diagnostics as described in this chapter, you must first of all "switch over" to the basic page number.

Example

The P area is addressed via pages. The basic page number of the IM 308–B interface module is "0" (P0). You want to request and evaluate diagnostics overview. You have accepted the default diagnostics address 252.

```
L KB 0          Page selection
T PY 255
L KY 127,n      Request diagnostics overview (n = 0, 1, 2 to 7)
T PW 252

L PW 252        Evaluate the diagnostics word
L KH 0000
!=F             Fault?
BEC
JU FBx          Evaluate the fault in FBx
```

Structure and Request of Station Diagnostics for ET 200U

The station status, the station diagnostics and the identifier–related diagnostics (module diagnostics) are described in this manual as they are typical for the ET 200U slave station.

The diagnostics function is loaded and transferred:

`L KY (Station number),(code)`	Station number: 3 to 124 Code: 0, ..., 7
`T PW 252`	Afterwards the station diagnostics is transferred into the “diagnostics address” byte (here I/O byte 252)

16 bytes per slave station are reserved for station status, station diagnostics and module diagnostics. The 16 bytes are organized in 8 words. They are structured as follows:

Table 4-9 Structure of Station Diagnostics and Module Diagnostics

Code	Diagnostics Address	Diagnostics Address + 1
0	Station status 1	Station status 2
1	Station status 3	Master address
2	Manufacturer identification	
3	Header	Station diagnostics
4	Header	Module diagnostics (slots 0 to 7)
5	Module diagnostics (slots 8 to 15)	Module diagnostics (slots 16 to 23)
6	Module diagnostics (slots 24 to 31)	Unassigned
7	Unassigned	Unassigned

Request Station Status

The bytes “station status 1 to 3” give information on the station. In the “master address” byte, the address of the master station, which has parameterized the slave station is indicated.

```
L KY n,0
T PW 252
```
The number of the slave station (n = station number) of which the station status is requested must be stored in the “diagnostics address” byte; in the “diagnostics address + 1” byte, the code for “station status 1 and station status 2” (= 0) has to be stored

or

```
L KY n,1
T PW 252
```
“Station status 3 and master address” (= 1)

The IM 308–B then writes the diagnostics message into the I/O word “diagnostics address”.

Read Station Status

```
L KH 0004
or
L KH 0000
L PW 252
!=F
BEC
JU FBx
```
If code = 0
or
If code = 1 and master station number = 1
Load diagnostics word
No fault?

Evaluate fault in FBx.

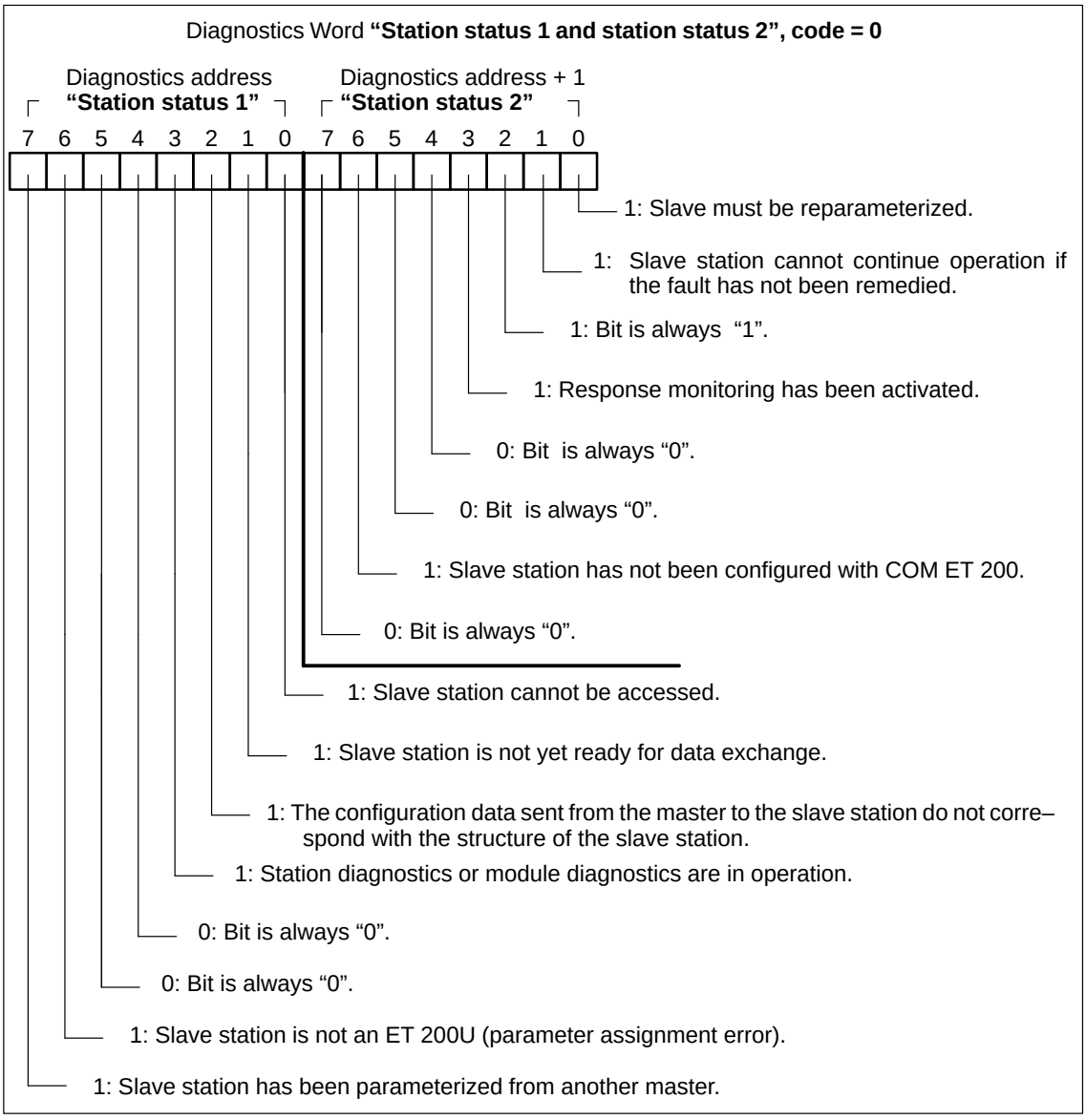

Figure 4-11 Structure of the Diagnostics Word after Request of the Station Status (Station Status 1 and Station Status 2)

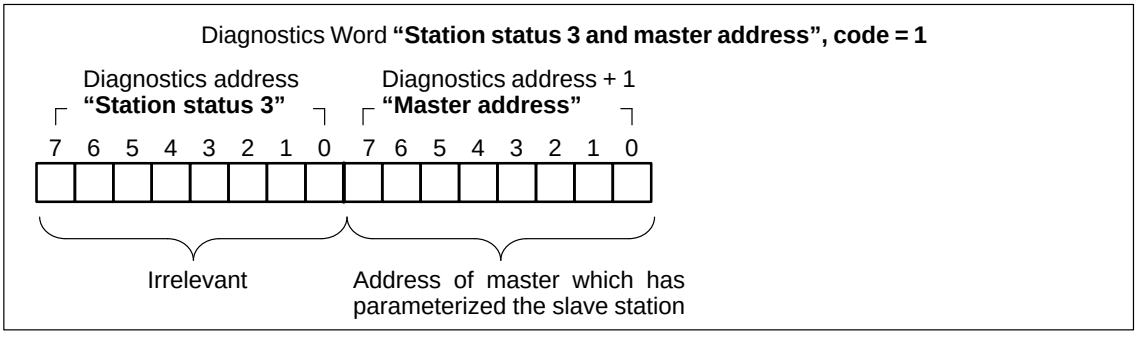

Figure 4-12 Structure of the Diagnost. Word after Request of the Station Status (Station Status 3 and Master Address)

Request Manufacturer Identification

The “manufacturer identification” byte describes the type of slave station.

```
L KY n,2
T PW 252
```

The number of the slave station (n = station number) from which the manufacturer identification is requested must be stored in the byte “diagnostics address”; in the byte “diagnostics address + 1” the code for the “manufacturer identification” (= 2) has to be stored.

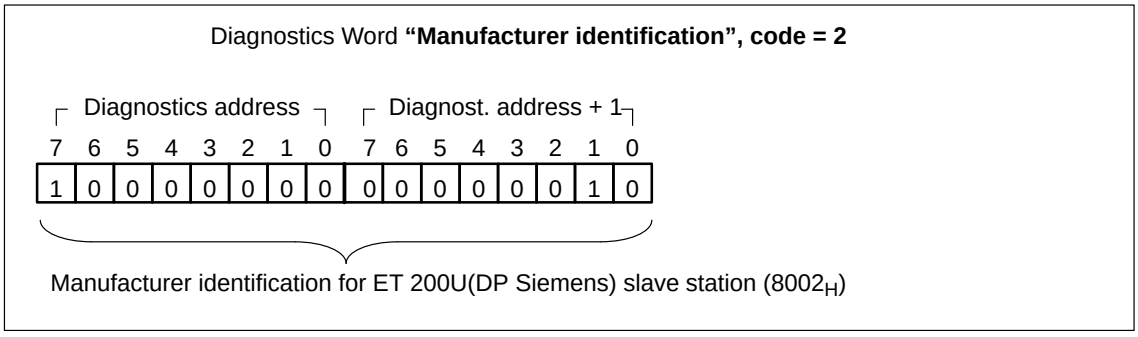

Figure 4-13 Structure of the Diagnostics Word after Request of the Manufacturer Identification

Request Station Diagnostics

The station diagnostics provides general information on the ET 200U slave station.

```
L KY n,3
T PW 252
```

The number of the slave station (n 0 station number) from which station diagnostics is requested must be stored in the “diagnostics address” byte; the code for “station diagnostics” (= 3) is to be stored in the “diagnostics address + 1” byte.

The IM 308–B interface module then writes the diagnostics message in the I/O word “diagnostics address”.

Read Station Diagnostics

```
L KH 0201
L PW 252      Load diagnostics word
!=F           No fault?
BEC
JU FBx        Evaluate fault in the FBx.
```

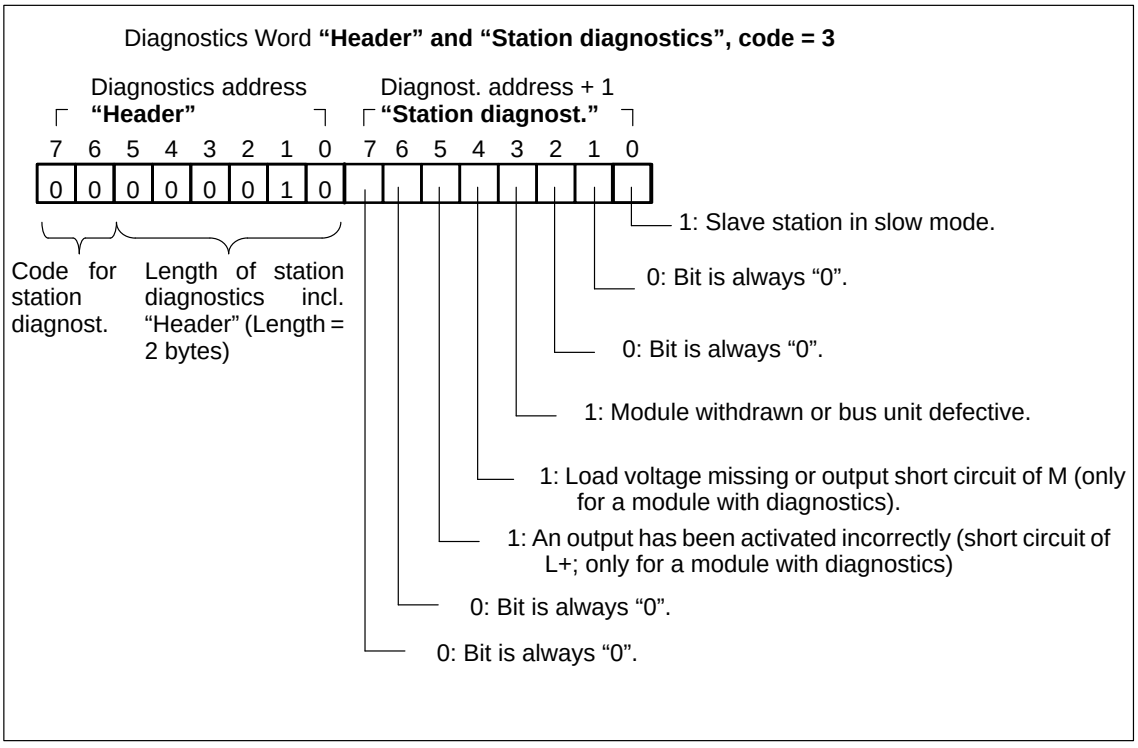

Figure 4-14 Structure of the Diagnostics Word after Request of Station Diagnostics

Request Module Diagnostics

Module diagnostics tells you which module in the ET 200U slave station is faulty.

```
L KY n,4
T PW 252
```
The number of the slave station (n = station number) from which module diagnostics is requested must be stored in the "diagnostics address" byte; in the "diagnostics address + 1" byte, the code for "header" and "module diagnostics (slots 0 to 7)" (= 4) is to be stored

or

```
L KY n,5
T PW 252
```
"Module diagnostics (slots 8 to 15) and (slots 16 to 23)" (= 5)

or

```
L KY n,6
T PW 252
```
"Module diagnostics (slots 24 to 31)" (= 6)

The IM 308–B interface module then writes the diagnostics message into the I/O word "diagnostics address".

Read Module Diagnostics

```
L KH 4500
or
L KH 0000
L PW 252
!=F
BEC
JU FBx
```
If code = 4
or
if code = 5, 6
Load diagnostics word
No fault?
Evaluate fault in the FBx.

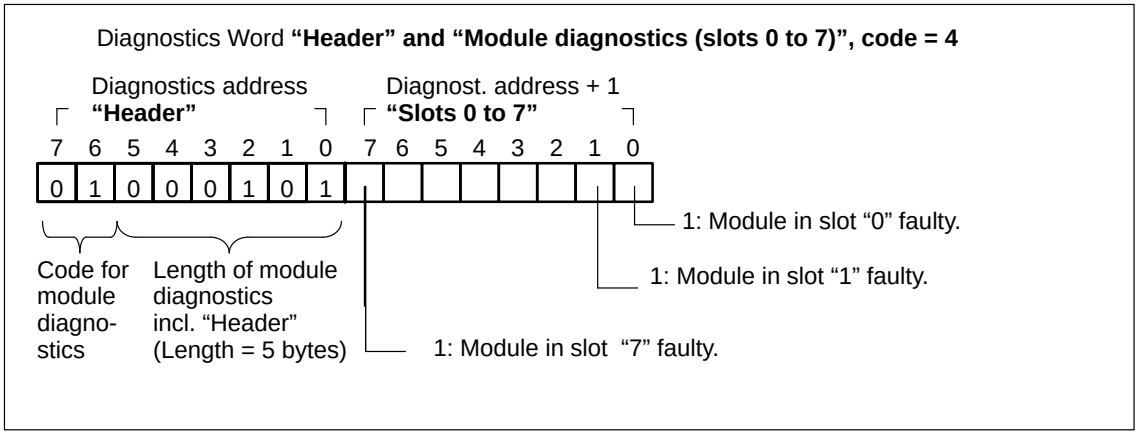

Figure 4-15 Structure of the Diagnostics Word after Request of Module Diagnostics (Header and Slots 0 to 7)

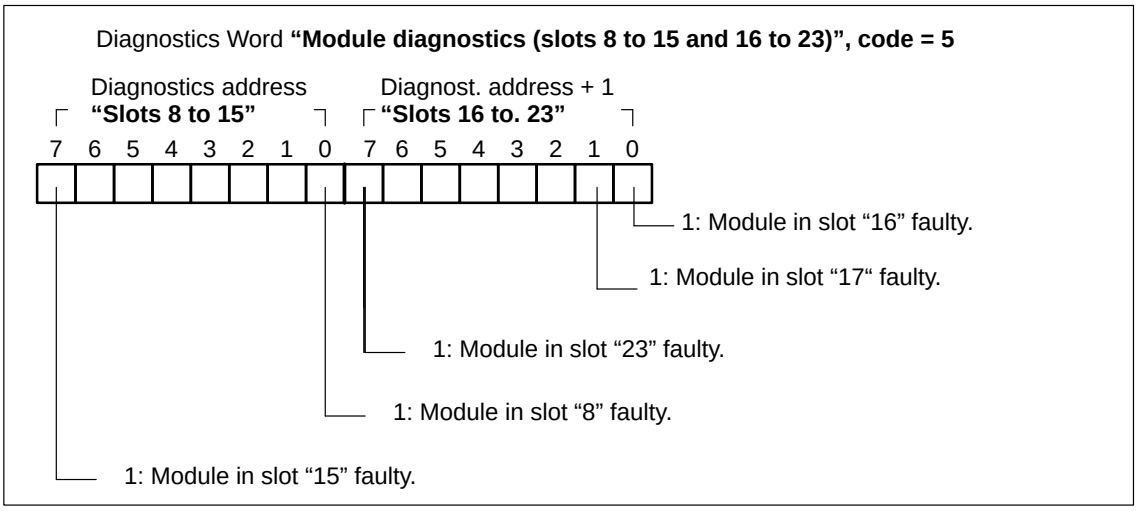

Figure 4-16 Structure of the Diagnostics Word after Request of Module Diagnostics (Slots 8 to 15 and 16 to 23)

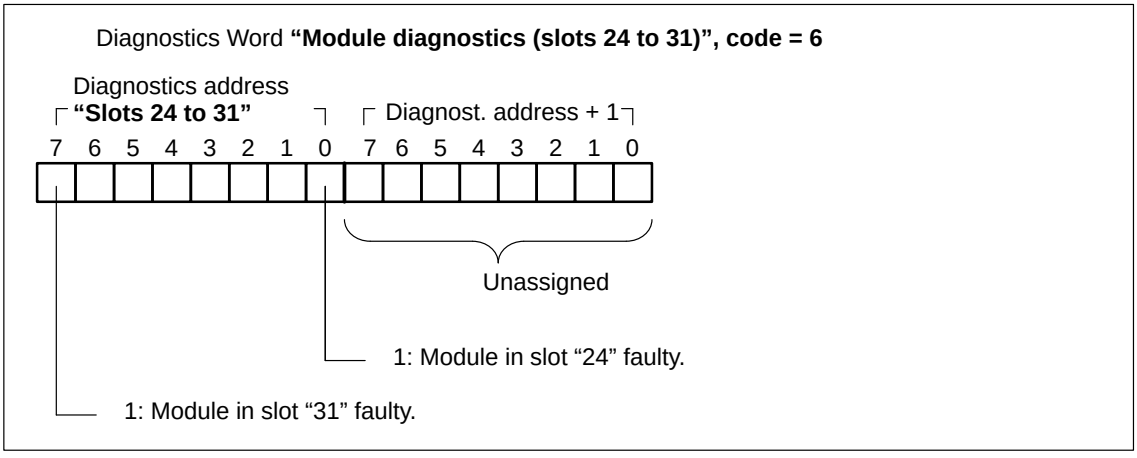

Figure 4-17 Structure of the Diagnostics Word after Request of Module Diagnostics (Slots 24 to 31)

ET 200U(DP Standard): Address Assignment, Starting UP and Diagnosing Faults Using COM ET 200

5

Prerequisites for this Chapter 5-1
In this Chapter 5-1
For Reference 5-1
What is DP Standard? 5-2
Requirements for Operation 5-2

5.1 Assigning Addresses Using COM ET 200 5-3
In this Section 5-3
Copying the Type File 5–3

5.1.1 Using the CONFIGURING Screen for ET 200U(DP Standard) 5-4
“Station Number” 5-5
“Area” 5-6
“Station Type” 5-6
“Next Available Address” 5-7
Special Address Assignment Conditions 5-7
Condition 1 5-8
Condition 2 5-8
Example Division of the Digital/Analog I/O Areas 5-8
Configuring 5-9
DP Standard Address ID 5-9
Help for Input of Unknown Address IDs 5-14
Defining Parameters 5-15
Finish Configuration 5-17

5.1.2 How to Proceed if the Configuration is Modified at a Later Point 5-18
Expanding the Slave Station at a Later Point 5-18
Expanding an Already Configured Slave Station 5-18
Modifying an Already Configured Slave Station 5-19

5.2 Starting Up and Testing with COM ET 200 for ET 200U(DP Standard) . . 5-20
In this Section 5-20

5.2.1 Setting the Station No. and Switch 8 5-21
Setting the Station Number 5-21
Setting Switch 8 5-22
Example of an “318–8MB12” 5–22

5.2.2 Starting Up an ET 200U Slave Station 5-23

5.2.3 Using the SYSTEM START–UP/TEST Screen for an ET 200U(DP Standard) Slave Station 5-24
Diagnostics Messages in the “...:STATUS/FORCE” Screen 5-25
STATUS/FORCE Function 5-26
STATUS Function 5-26
FORCE Function 5-26

	FORCE with Load Circuit	5-27
5.3	Diagnosing Faults for ET 200U(DP Standard)	5-28
	In this Section	5-28
5.3.1	Using LEDs to Diagnose Problems	5-29
5.3.2	Using COM ET 200 to Diagnose Problems	5-30
5.3.3	Diagnosing Faults with STEP 5 (Station Diagnostics)	5-32
	General Remarks on Diagnostics	5-32
	Special Features of Requesting Diagnostics Using Page Addressing	5-32
	Structure and Request of Station Diagnostics for ET 200U	5-33
	Request Station Status	5-34
	Read Station Status	5-34
	Request Manufacturer Identification	5-36
	Request Station Diagnostics	5-37
	Read Station Diagnostics	5-37
	Request Module Diagnostics	5-38
	Read Module Diagnostics	5-38

Figures

5-1	ET 200U(DP Standard): CONFIGURING Screen (1)	5-4
5-2	ET 200U(DP Standard): CONFIGURING screen (2)	5-5
5-3	ET 200U(DP Standard): CONFIGURING Screen (3)	5-6
5-4	Example of Process I/O Image with ET 200	5-7
5-5	Structure of Parameterization Frame	5-16
5-6	Location of the Bank of Switches for Setting the Station Number	5-21
5-7	SYSTEM START–UP/TEST: MODULE SELECTION Screen	5-24
5-8	SYSTEM START–UP/TEST: STATUS/CONTROL Screen	5-25
5-9	Fault LEDs on the ET 200U Interface Module	5-29
5-10	DIAGNOSTICS: OVERVIEW Screen	5-30
5-11	INDIVIDUAL DIAGNOSTICS Screen	5-31
5-12	Structure of the Diagnostics Word after Request of the Station Status (Station Status 1 and Station Status 2)	5-35
5-13	Structure of the Diagnost. Word after Request of the Station Status (Station Status 3 and Master Address)	5-35
5-14	Structure of the Diagnostics Word after Request of the Manufacturer Identification	5-36
5-15	Structure of the Diagnostics Word after Request of Station Diagnostics	5-37
5-16	Structure of the Diagnostics Word after Request of Module Diagnostics (Header and Slots 0 to 7)	5-38
5-17	Structure of the Diagnostics Word after Request of Module Diagnostics (Slots 8 to 15 and 16 to 23)	5-39
5-18	Structure of the Diagnostics Word after Request of Module Diagnostics (Slots 24 to 31)	5-39

Tables

5-1	Names of the Type Files for the ET 200U	5-10
5-2	Address IDs for the Modules in an ET 200U(DP Standard) Station	5-10
5-3	Address IDs for the Modules in an ET 200U(DP Standard) Station	5-11
5-4	Address IDs for the Modules in an ET 200U(DP Standard) Station	5-12
5-5	Address IDs for the Modules in an ET 200U(DP Standard)	5-13
5-6	Explanation of Parameters in the DP–IDENTIFIER Field	5-14
5-7	Meaning of the Parameters in the Parameterization Frame	5-16
5-8	Function of Switch 8	5-22
5-9	Resetting Outputs with Load Circuit Turned On	5-27
5-10	LED Fault Messages on ET 200U Interface Module	5-29
5-11	Diagnostics with STEP 5	5-32
5-12	Structure of Station Diagnostics and Module Diagnostics	5-33

ET 200U(DP Standard): Address Assignment, Starting UP and Diagnosing Faults Using COM ET 200

5

Prerequisites for this Chapter

This chapter is based on the **"ET 200 Distributed I/O System"** Manual.

The fundamentals of the COM ET 200 are described in the **"ET 200 Distributed I/O System"** Manual.

A major feature of COM ET 200 is the address assignment. Notes on the type of address assignment (linear addressing or page addressing) are given in the "**ET 200 Distributed I/O System**" Manual.

Address assignment, starting–up and the fault diagnosing procedures depend on the type of slave station. This chapter deals with the procedures applicable for ET 200U(DP Standard), using COM ET 200.

In this Chapter

This chapter describes how to use COM ET 200 and STEP 5 for an ET 200U(DP Standard) module:

The following features are described:

- Address assignment using the CONFIGURING screen (→ Section 5.1)
- Starting–up and testing using the START–UP/TEST screen (→ Section 5.2)
- Diagnosing faults using the DIAGNOSTICS screen (→ Section 5.3)

For Reference

To quickly look up important parameters, please refer to:

- Address IDs for ET 200U(DP Standard) (→ Table 5-2, → Section 5.1.1)
- Setting the station number and switches (bank of switches) (→ Section 5.2.1)
- Explanation of LEDs (→ Table 5-10, → Section 5.3.1)
- Diagnostics word for ET 200U(DP Standard) (→ Table 5-12, → Section 5.3.3)

What is DP Standard?

DP Standard is explained in detail in Chapter 1.

- An ET 200U interface module with the Order No. 6ES5 318–8MB1**2**

  or

- an ET 200U interface module with the Order No. 6ES5 318–8M**C11**,

using the "DP–Standard" bus protocol is called ET 200U(DP Standard).

DP Standard refers to the PROFIBUS–DP (DIN 19245, Part 3) draft standard.

The bank of switches is used to select the bus protocol according to DP Standard. The bank of switches is described in Section 5.2.1.

Requirements for Operation

An ET 200U(DP Standard) can be started up using

- COM ET 200 (version 4.0) and
- the IM 308–B master interface module, version 5 (printed on the module) or as from software version 4.0 (can be read out using COM ET 200).

An ET 200U station with Order No. 6ES5 318–8MB1**2** can be operated using previous versions of COM ET 200 and the IM 308–B. For this purpose, switch 8 must be set to "DP Siemens".

The ET 200U station with Order No. 6ES5 318–8MB1**2** is then operated as an ET 200U(DP Siemens) station. For details on ET 200U(DP Siemens), please refer to Chapter 4.

Note

It is always possible to operate the ET 200U(DP Siemens) und ET 200U(DP Standard) distributed I/O units in parallel on one bus.

5.1 Assigning Addresses Using COM ET 200

In this Section

This section describes the typical address assignment for ET 200U(DP Standard).

You will learn how to use the COM ET 200 CONFIGURING screen to configure the ET 200U(DP Standard) distributed I/O station.

Section 5.1.1 deals with configuring the ET 200U(DP Standard).

Section deals 5.1.2 with special configuring requirements.

Copying the Type File

The relevant type file is required for configuring an ET 200U with Order No. ”6ES5 318–8MB12” or ”6ES5 318–8MC11” by means of COM ET 200. The type files have the following names:

Table 5-1 Names of the Type Files for the ET 200U

Name	Meaning
SI8008TD.200 SI8008TE.200 SI8008TF.200 SI8008TS.200 SI8008TI.200	Type file for ”6ES5 318–8MB12” in German English French Spanish Italian
SI8009TD.200 SI8009TE.200 SI8009TF.200 SI8009TS.200 SI8009TI.200	Type file for ”6ES5 318–8MC11” in German English French Spanish Italian

The type file for the “6ES5 318–8MB12” is supplied together with the COM ET 200, V 4.0. The type file for the “6ES5 318–8MC11” is available together with the “ET 200U Distributed I/O System” manual. It must be copied into the COM ET 200 directory:

Installation under S5–DOS/ST (MS–DOS):

Copy the type files into the COM ET 200 directory using the command
`PCOPY 0A:*.200 C:\COMET200`.

Installation under S5–DOS/ST (PCP/M):

Copy the type files into the user area of the programmer, which also contains COM ET 200 using the command
`PIP C:=A:*.200[g0rvw`.

5.1.1 Using the CONFIGURING Screen for ET 200U(DP Standard)

In the CONFIGURING screen, you assign for each ET 200U(DP Standard):

- the specific modules to specific slots of the slave station

  and

- the start addresses of the individual modules.

The following steps describe the procedure you must follow to configure your ET 200U(DP Standard) slave station, from creating the configuration data to storing it:

1. Make the appropriate entries in the ET 200 SYSTEM PARAMETERS screen (→ "ET 200 Distributed I/O System" Manual).

After you confirm the ET 200 system parameters with the <F6> (ENTER) key

2. press <F8> to return to the FUNCTIONS screen.
3. From the FUNCTIONS screen, press <F2> to go to the CONFIGURING screen.

Result: The CONFIGURING screen appears.

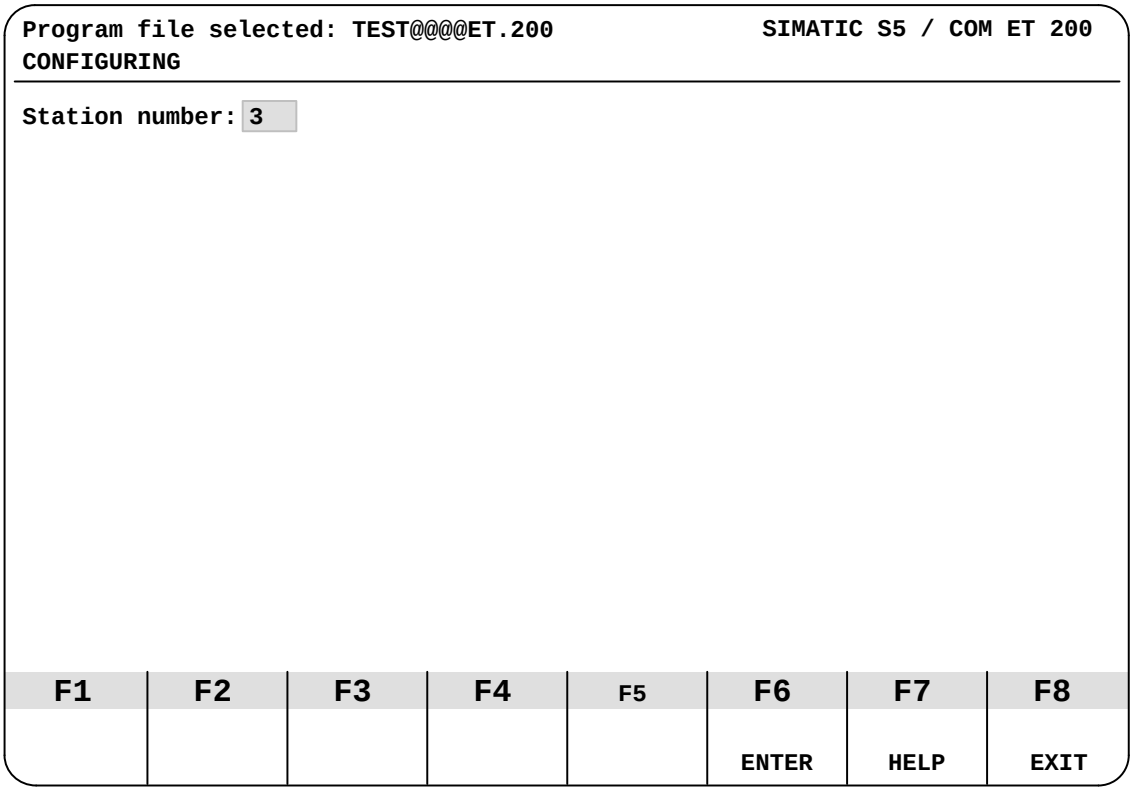

Figure 5-1 ET 200U(DP Standard): CONFIGURING Screen (1)

"Station Number"

An ET 200U(DP Standard) must have a station number only in the range from 3 to 124. You **cannot** enter the station number of an additional active station here (if you specified one in the ET 200 SYSTEM PARAMETERS screen).

When pressing <F7> (HELP) – the cursor must be positioned in the "station number" field – a window is displayed showing all station numbers and station types assigned so far. You can select a station and output its configuration. If station numbers have not been assigned yet, the message NO STATIONS CONFIGURED is output.

4. If necessary, correct the station number that appears on the screen and press <F6> (ENTER) to complete your entry.

Result: If the station whose number you entered has already been configured, its configuration appears on the screen after you complete your entry.

If the station whose number you entered has not already been configured, two additional entry fields appear:

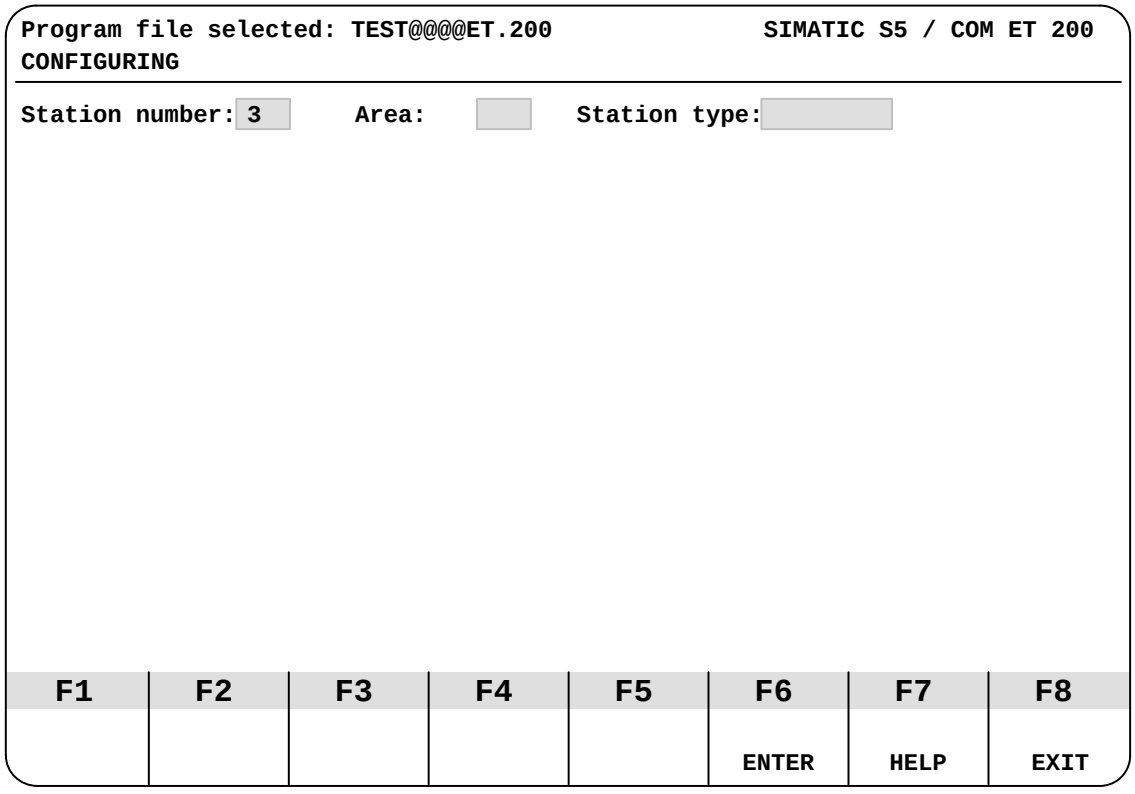

Figure 5-2 ET 200U(DP Standard): CONFIGURING screen (2)

"Area"

If you entered "N" for the ET 200 system parameter "Dual–port RAM addr.", you must select one of the permissible areas for linear addressing (P or Q).

If you entered "Y" for the ET 200 system parameter "Dual–port RAM addr.", you must enter the abbreviation of the peripheral area (P or Q) and the dual–port RAM page number. The permissible dual–port RAM page numbers are derived from the basic dual–port RAM page number).

Examples: "**P0**" for page number 0 in the P peripheral area.

"**Q1**" for page number 1 in the Q peripheral area.

"Station Type"

Press <F7> (HELP) to select the station type:

If you want to use an ... as ET 200U(DP Standard),	**... select the following:**
"IM 318–8MB12"	ET 200U–DP
"IM 318–8MC11'"	ET 200U–DP/FMS

5. Press <F6> (ENTER) to confirm your entries.

Result: COM ET 200 accepts the entries and fills the screen (1: Configuration field):

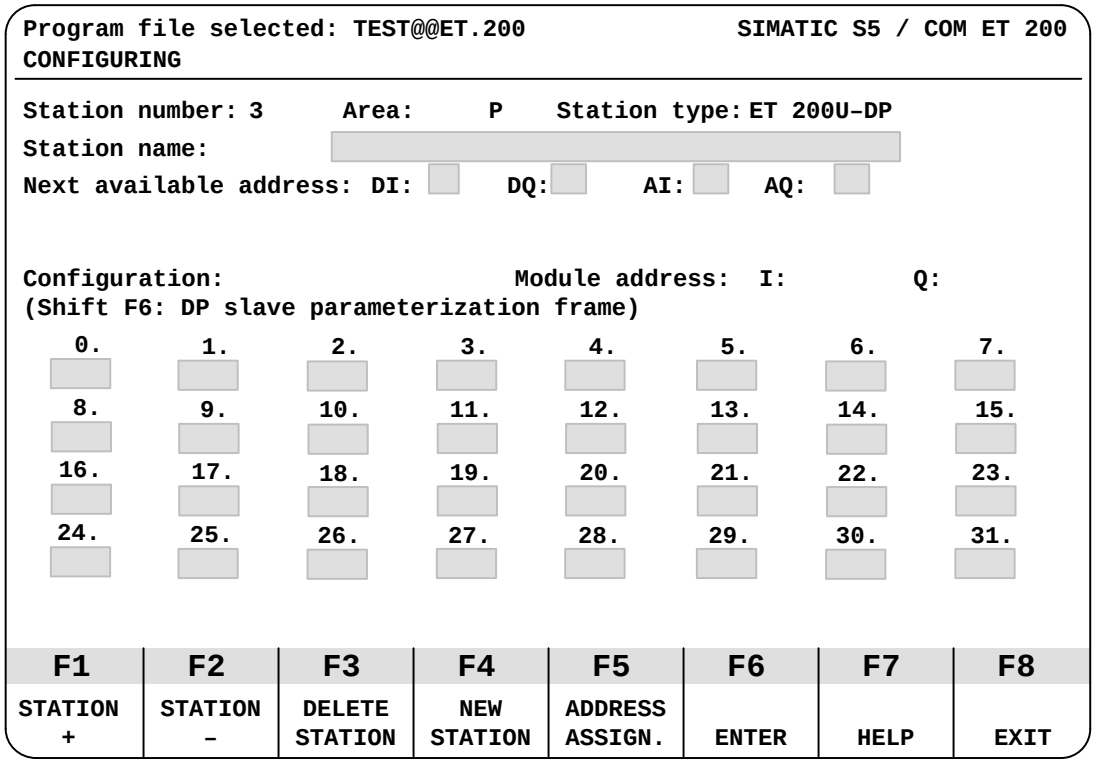

Figure 5-3 ET 200U(DP Standard): CONFIGURING Screen (3)

6. Assign a station name if desired (all keyboard characters are permissible).

"Next Available Address"

Under the "Station name" field is the "Next available address" field with areas for four entries. When you configure for the first time in the program file that you set up, all four first available addresses are assigned as 0.

If a slave station has already been configured, each entry field shows the address of the first available byte for the following areas:

DI (digital input modules)

DQ (digital output modules)

AI (analog input modules)

AQ (analog output modules)

COM ET 200 updates the "Next available address" input fields immediately after you enter a valid address ID for a slot in the "Configuration" field of this screen.

However, before you configure an ET 200U (DP Standard) slave station, you must take the following steps:

- Separate the areas for digital and analog modules so that addresses do not overlap. Communications processors (CPs) and intelligent I/O modules (IPs) count here as analog modules.
- Determine the structure of your stations. Additions and changes that you make later result in address assignments that can be confusing to read or otherwise unclear.

Special Address Assignment Conditions

CPUs 941, 942, 943 and 944 of the S5–115U/H PLC series generate the process I/O image word–by–word. This may result in

- two slave stations being addressed within one word

  or

- the address of the first slave station ending exactly in the middle of one word and the address of the second slave station starting at the same position.

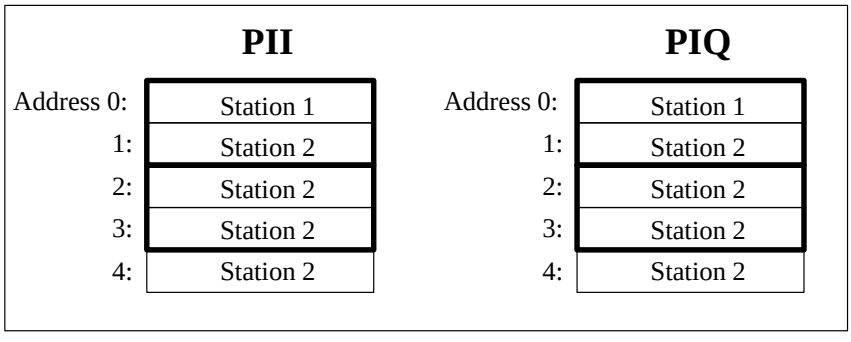

Figure 5-4 Example of Process I/O Image with ET 200

If an input/output value is read in via the **process I/O image**, the following conditions may result:

Condition 1

Assumption: Failure of station 1 in the PII or in the PIQ

The CPUs 941 to 944 detect a failure of station 1 since they read in/write the process I/O image word–by–word. Therefore, the CPUs do **not** read/write address 0 in the process I/O image of station 2, although station 2 is available.

The CPU stops with timeout (if in COM ET 200 "timeout = yes"). After a transition from STOP to RUN, the CPU switches again to RUN. Station 1 and address 1 of station 2 are not entered in the process I/O image.

Condition 2

Assumption: Failure of station 2

PII: The CPUs 941 to 944 detect a failure of station 2 since they read in the process I/O image word–by–word.

The CPU stops with timeout (if in COM ET 200 "timeout = yes"). The CPU remains in the STOP mode even after a transition from STOP to RUN.

PIQ: The CPUs 941 to 944 detect a failure of station 2 since they read in/write the process I/O image word–by–word. Therefore, the CPUs do **not** read/write address 0 in the process I/O image of station 1, although station 1 is available.

The CPU stops with timeout (if in COM ET 200 "timeout = yes"). After a transition from STOP to RUN, the CPU switches again to RUN. Station 2 and address 0 of station 1 are not entered in the process I/O image.

Note

To avoid the above conditions, note the following when addressing CPUs 941 to 944:

1. Use load and transfer commands. These commands work on a byte–by–byte basis and are thus able to identify the presence of each individual byte.
2. Assign an even number as address start in a slave station (e.g. 0, 2, 4, 6, ...) and do not use the uneven address numbers. This enables you to access the process I/O image.

Example Division of the Digital/Analog I/O Areas

Example division of the digital and analog I/O areas:

1. Accept "0" as the next available address for DI and DQ modules.
2. Enter "128" as next available address for AI and AQ modules.

This division corresponds to the usual SIMATIC division of the P area. However, you can separate the areas according to your needs.

Configuring

The numbers above the input fields in the “Configuration” field designate the slots of the ET 200U (DP Standard) slave station.

1. Assign a proper address ID to each module in the ET 200U(DP Standard) station (see following tables). Assign the slots in ascending order. Do not skip any slot. If you have a slot that you are not going to use, enter “000” as the address for that slot.

Note

Please refer to Section 3.1 for the numbering of slots in case of a multi–tier configuration.

If you are using page addressing, note the following:

With page addressing, peripheral byte 255 is assigned for selecting the page.

DP Standard Address ID

You can use more than one alternative to enter the address ID of an ET 200U(DP Standard) station:

- as decimal number (according to the PROFIBUS–DP draft standard)

  or

- as module code, e.g. 8DE or 1AE. COM ET 200 automatically converts the module code into a decimal number

  or

- press <F7> (HELP) to obtain a list of all available I/O modules with address ID. You can then select the required ID (first position the cursor in the address ID input field).

Note

ET 200U(DP Standard) and ET 200U(DP Siemens) use different decimal address IDs.

Table 5-2 Address IDs for the Modules in an ET 200U(DP Standard) Station

Order No. of Module	Address ID ET 200U(DP Standard)		Address Scope (Byte)	Delay Time (ms)[1]	Address Area	Current Consumption (mA)	Power Loss (W)
	Order Code	Decimal No.					
Digital Inputs 6ES5 ...:							
420–8MA11	8DI	016	1	2.5 to 5	Digital	16	0.8
421–8MA12	8DI	016	1	2.3 to 4.5	Digital	34	1.6
422–8MA11	–	017 or 080[2]	2[3]	3 to 4	Digital or analog	50	4.5
430–8MB11	8DI	016	1	1.4 to 5	Digital	5	2
430–8MC11	8DI	016	1	10 to 20	Digital	16	2.8
430–8MD11	8DI	016	1	10 to 20	Digital	16	2.5
431–8MA11	8DI	016	1	4 to 5.5	Digital	32	2
431–8MC11	8DI	016	1	10 to 20	Digital	32	2.5
431–8MD11	8DI	016	1	10 to 20	Digital	32	3.6
433–8MA11	8DI	016	1	1 to 10	Digital	6	2.4
437–8EA12	8DI	016	1	40	Digital	50	0.45
Digital Outputs 6ES5 ...:							
440–8MA11	8DQ	032	1	< 1	Digital	15	3
440–8MA21	8DQ	032	1	< 1	Digital	15	4.8
441–8MA11	8DQ	032	1	< 1	Digital	14	3.5
450–8MB11	8DQ	032	1	< 1	Digital	15	5
450–8MD11	8DQ	032	1	< 1	Digital	14	3.5
451–8MA11	8DQ	032	1	< 1	Digital	24	4
451–8MD11	8DQ	032	1	< 1	Digital	25	3.5
451–8MR11	8DQ	032	1	< 1	Digital	30	1.6
451–8MR12	8DQ	032	1	< 1	Digital	30	1.6
452–8MR11	8DQ	032	1	< 1	Digital	14	2
453–8MA11	8DQ	032	1	< 1	Digital	20	1
457–8EA12	8DQ	032	1	< 1	Digital	55	0.5

1 For an input module, the delay time is the time between a signal change at an input and a change of state on the I/O bus. For an output module, the delay time is the time between a signal change on the I/O bus and a change of state at an output.

2 The module can also be input with an analog address ID.

3 The module occupies an additional 2 output bytes in the ET 200U station but not in the COM ET 200.

Table 5-3 Address IDs for the Modules in an ET 200U(DP Standard) Station

Order No. of Module	Address ID ET 200U(DP Standard)		Address Scope (Byte)	Delay Time (ms)[1]	Address Area	Current Consumption (mA)	Power Loss (W)
	Order Code	Decimal No.					
Analog Inputs 6ES5 ...:							
464–8MA11[1]	1–channel:	1–channel:	1–ch.:	1–ch.:	Analog	70	0.7
464–8MA21[1]	1AI,	080,	2	60		100	0.7
464–8MB11[1]	2–channel:	2–channel:	2–ch.:	2–ch.:		70	0.7
464–8MC11[1]	2AI,	081,	4	120		70	0.7
464–8MD11[1]	4–channel:	4–channel:	4–ch.:	4–ch.:		70	0.7
464–8ME11[1]	4AI.	083	8	240		70	0.7 to 1
464–8MF11[2]	1–channel: 1AI,	1–channel: 080,	1–ch.: 2	1–ch.: 60	Analog	70	0.9
464–8MF21[2]	2–channel: 2AI.	2–channel: 081	2–ch.: 4	2–ch.: 120	Analog	100	0.9
466–8MC11	2AI	081	4	20	Analog	100	0.9
467–8EE11[2]	1–channel: 1AI, 2–channel: 2AI.	1–channel: 080, 2–channel: 081	1–ch.: 2 2–ch.: 4	1–ch.: 2–ch.:	Analog	320	0.7 to 3
Analog Outputs 6ES5 ...:							
470–8MA11	2AQ	097	4	0.1	Analog		3.1
470–8MA12	2AQ	097	4	0.15	Analog		3.1
470–8MB11	2AQ	097	4	0.1	Analog		3.8
470–8MB12	2AQ	097	4	0.15	Analog		3.8
470–8MC11	2AQ	097	4	0.1	Analog		3.8
470–8MC12	2AQ	097	4	0.15	Analog		3.8
470–8MD11	2AQ	097	4	0.1	Analog		3.1
470–8MD12	2AQ	097	4	0.15	Analog		3.1
470–8MD21	2AQ	097	4		Analog		
477–8EC11	2AX	241	4*		Analog	350	3.2

* The address scope is necessary for the inputs and the outputs (i.e. if the address scope is 2 bytes, 2 bytes are used for the inputs and 2 bytes are used for the outputs). Since COM ET 200 assigns the addresses for these modules optionally, inputs and outputs can have different start addresses.

1 With these analog modules, you can use one, two, or four channels.

2 With these analog modules, you can use one or two channels.

Table 5-4 Address IDs for the Modules in an ET 200U(DP Standard) Station

Order No. of Module	Address ID ET 200U(DP Standard)		Address Scope (Byte)	Delay Time (ms)[1]	Address Area	Current Consumption (mA)	Power Loss (W)
	Order Code	Decimal No.					
Input/Output Module:							
482–8MA11 –8MA12 –8MA13	–	049 or 112[1]	2*		Digital or analog	50	4.5
Power Supply Module:							
935–8ME11[2]	8DI/8DI	016/016	–		Digital		7.5
Simulator Module:							
788–8MA11	8DI	016	1	< 0.2	Digital	30	0.3
	8DQ	032					
Timer Module:							
380–8MA11	8DX	048	1*		Digital	10	
Counter Modules:							
385–8MA11	8DX	048	1*	0.18	Digital	20	2.5
385–8MB11	2AX	241	4*		Analog	70	1.9
Comparator Module:							
461–8MA11	8DI	016	1	5	Digital	35	0.3
PID Controller Modules:[3]							
262–8MA11 –8MA12	4AX	243	8*	100 ... 200	Analog	20	
262–8MB11 –8MB12	4AX	243	8*	100 ... 200	Analog	20	
Position Control Modules:							
263–8MA11[2]	4AX/000	243/000	8*		Analog	120	4
266–8MA11	4AX	243	8*		Analog		
267–8MA11	2AX	241	4*		Analog	150	

* The address scope is necessary for the inputs and the outputs (i.e. if the address scope is 2 bytes, 2 bytes are used for the inputs and 2 bytes are used for the outputs). Since COM ET200 assigns the addresses for these modules optionally, inputs and outputs can have different start addresses.

1 The module can also be addressed as 1–channel analog module

2 The module occupies 2 slots.

3 You can address a PID controller module in an ET 200 system **at least** every 200 ms. You cannot use function blocks FB61 and FB62.

Table 5-5 Address IDs for the Modules in an ET 200U(DP Standard)

Order No. of Module	**Address ID ET 200U(DP Standard)**		**Address Scope (Byte)**	**Delay Time (ms)[1]**	**Address Area**	**Current Consumption (mA)**	**Power Loss (W)**
	Order Code	**Decimal No.**					
IP 264 Electronic Cam Controller:							
264–8MA11[1]	4AX/000	243/000	8*		Analog	120	4
High Speed Sub Control IP 265:[2]							
265–8MA01	4AX	243	8*		Analog		
CP 521 BASIC:							
521–8MB11	4AX	243	8*		Analog	180	1.6
CP 521 SI:							
521–8MA21	4AX	243	8*		Analog	140	1.2
330–8MA11 or no module plugged in	000	000	0	0			

* The address scope is necessary for the inputs and the outputs (i.e. if the address scope is 2 bytes, 2 bytes are used for the inputs and 2 bytes are used for the outputs). Since COM ET200 assigns the addresses for these modules optionally, inputs and outputs can have different start addresses.

1 The module occupies 2 slots.

2 IP 265 can be operated in Slow Mode only. The Slow Mode must be set in the parameterization frame. Please refer to Figure KEIN MERKER for the Slow Mode setting.

When configuring, if you put the cursor in an input field of a slot that has already been configured, COM ET 200 automatically fills in the area start addresses in the

"Area address: I: Q: "

output field as follows:

- In the "I" field

  area start address for the input modules

- In the "Q" field

  area start address for the output modules

Help for Input of Unknown Address IDs

The above table lists all the address IDs you need.

If you need an address ID for a special module, you can input the address ID individually, using COM ET 200 version 4.0:

Note: The cursor must be positioned in an address ID input field.

1. Press key <F7> (HELP).

Result: An address ID input field is displayed (DP IDENTIFIER):

```
DP–IDENTIFIER
I/Q: #  Length: ## Format: # Consistency: #
Help:
I/Q:        I: Input,          Q: Output,
            X: Input/Output,
Length:     1 – 16
Format:     B: Byte,           W: Word,
Consistency:0: Byte/Word       1: Total
            (depending on format)
```

The following table explains the parameters:

Table 5-6 Explanation of Parameters in the DP–IDENTIFIER Field

Parameter	Explanation	Permissible Inputs
I/Q	Input module (I), output module (Q) or I/O module (X)?	I, Q, X
Length	Length specifies the address scope. The unit in which this scope is specified, is input in the "format" parameter.	1 to 16
Format	Unit for the "length" (address scope in bytes or words).	B, W
Consistency	0: Consistency is ensured within the selected format. 1: Consistency is ensured for the "length" (max. 8 bytes or 4 words).	0, 1

Example

You want to specify the “466–8MC11” 2–channel analog input module in the DP–IDENTIFIER field:

```
DP–IDENTIFIER
I/O: I  Length:  2 Format: W Consistency: 0
Help: I/O: I:Input,          Q: Output,
           X: Input/Output,
Length:    1 – 16
Format:    B: Byte,          W: Word,
Consistency:0: Byte/Word     1: Total
           (depending on format)
```

Example

You want to specify the IP 262 controller module in the DP–IDENTIFIER field:

```
DP–IDENTIFIER
I/O: X  Length:  4 Format: W Consistency: 1
Help: I/O: I:Input,          Q: Output,
           X: Input/Output,  Length:
1 – 16
Format:    B: Byte,          W: Word,
Consistency:0: Byte/Word     1: Total
           (depending on format)
```

Defining Parameters

As from COM ET 200 version 4.0, additional special parameters can be defined for each individual slave station.

If you want to use the ET 200U(DP Standard) station in **Slow Mode**, it is essential to fill in the parameterization frame.

1. Press keys (Shift) <F6> (DP SLAVE PARAMETERIZATION FRAME).

Result: The DP slave parameterization screen is displayed:

```
DP SLAVE PARAMETERIZATION FRAME

Byte (Input in KH format )
_____|_____________________________________
 0   | 00
10   |
20   |
```

2. Enter the value in the “KH” format:

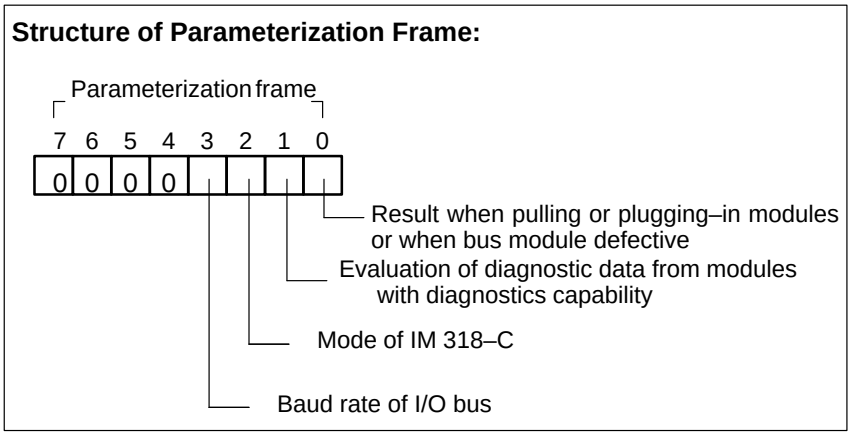

Figure 5-5 Structure of Parameterization Frame

The values of the bits in the parameterization frame are explained in the following table (default is always “0”):

Table 5-7 Meaning of the Parameters in the Parameterization Frame

Bit	Value	Meaning
Bit 0: Result when pulling or plugging in modules or when bus module defective	0	All outputs are set to “0” in the case of a fault. The ET 200U(DP Standard) station does not enter STOP mode.
	1	The ET 200U(DP Standard) interrupts the “shifting” on the I/O bus. The ET 200U(DP Standard) reads in the plugged–in modules again and continues the data transfer on the basis of the current values. When “shifting” is interrupted, the output values are retained.
Bit 1: Evaluation of diagnostic data from modules with diagnostics capability	0	Diagnostic data from modules with diagnostics capability are not evaluated.
	1	If modules with diagnostics capability are plugged–in, the diagnostic data are evaluated.
Bit 2: Mode of the IM 318–C	0	IM 318–C acts as ET 200U(DP Standard), ET 200U(FMS) or ET 200U in a mixed configuration.
	1	IM 318–C is operated as combi slave.
Bit 3: Baud rate of I/O bus	0	The I/O bus is **not** operated in Slow Mode.
	1	The I/O bus is operated in Slow Mode.

3. Confirm your input of the parameterization frame by pressing <F6> (ENTER).

Finish Configuration

After you have defined the parameters, configuration is completed:

1. Press <F6> (ENTER) to confirm the configuration for each configured station.

Result: The configuration is stored in the file that has been preset.

COM ET 200 automatically guarantees that areas that must be transferred consistently are also marked as consistent areas (e.g. that each analog value is transferred separately in one message frame, i.e. consistently over an area of two bytes).

By pressing the function keys you can activate the following functions:

If you want to do the following:	Then press the following key:	Name of the function key
Display the configuration of the next higher (configured) station	<F1>	STATION +
Display the configuration of the next lower (configured) station	<F2>	STATION –
Delete the configuration of the station that you are currently configuring	<F3>	DELETE STATION
Configure a new station (COM ET 200 selects the number of the next nonconfigured station automatically)	<F4>	NEW STATION
Switch to the STATION–ORIENTED ADDRESS ASSIGNMENT screen	<F5>	ADDRESS ASSIGN.
Confirm the station configuration that you just input	<F6>	ENTER
Define parameters such as • Result when module is pulled or bus unit defective • Evaluation of diagnostic data from modules with diagnostics capability • Mode of IM 318–C • I/O bus speed (Slow Mode).	(Shift) <F6>	DP Slave parameterization frame
Know what entries are permitted in a specific input field	<F7>	HELP
Get help on input of address identifiers (order numbers)	(Shift) <F7>	–
Return to the FUNCTIONS screen	<F8>	EXIT

5.1.2 How to Proceed if the Configuration is Modified at a Later Point

Expanding the Slave Station at a Later Point

You know what the final configuration of a station will be, but you do not have all the modules available, or you want to add some modules later.

1. Configure the station according to your final plan. In this way you specify the module start addresses for all the I/O modules initially, even for those that you have not added on yet.
2. Press <F6> (ENTER) to confirm the configuration.
3. Put the cursor in the input field for the slot that is not occupied yet.
4. Overwrite the address ID with “000”.
5. Press <F6> (ENTER) to reconfirm the configuration.

Overwriting the address ID with “000” maintains the address space for the original module.

When you plug in the missing module later, you must reconfigure as follows:

1. Replace the “000” ID with the original address ID.
2. Press <F6> (ENTER) to confirm the configuration.

Expanding an Already Configured Slave Station

You want to add some I/O modules to a station that you have already configured.

1. In the CONFIGURING screen, press <F4> (NEW STATION) to select the number of the station that you want to expand.

COM ET 200 displays the configuration of the selected station. The “1st available address” input field shows the address that will be assigned to the additional module.

2. Enter the address ID of the additional module at the next available slot.
3. Press <F6> (ENTER) to confirm the configuration.

After you enter the new configuration, additional modules may have addresses that are out of sequence with the addresses of the originally configured modules.

Modifying an Already Configured Slave Station

You want to replace one module with a different module in a station that you have already configured.

1. In the CONFIGURING screen, press <F4> (NEW STATION) to select the number of the station that you want to change.

COM ET 200 displays the configuration of the selected station. The “1st available address” input field shows the address that will be assigned to the new module.

2. Overwrite the address ID of the old module with the address ID of the new module.
3. Press <F6> (ENTER) to confirm the configuration.

The new module has a module start address that is not consecutive in the order of the addresses of the stations that you configured previously. The start address reflects a jump in addressing.

The address space that the old module took up is **released** and could be used for a module with the same address ID. If you wanted to put a module in such a slot, you would have to edit the “1st available address” field. However, this is not recommended.

5.2 Starting Up and Testing with COM ET 200 for ET 200U(DP Standard)

In this Section

This section describes

- How the station number and switch 8 are set (→ Section 5.2.1)
- How you connect the ET 200U to the programmer (→ Section 5.2.2)

  and
- How you use the COM ET 200 “START–UP/TEST” screen (→ Section 5.2.3).

5.2.1 Setting the Station No. and Switch 8

Setting the Station Number

Use the bank of switches of the ET 200U interface module to set the station number of your ET 200U station (→ Figure 5-6). Set the station number in binary code. Each of the first seven switches on the bank of switches has a different positional value.

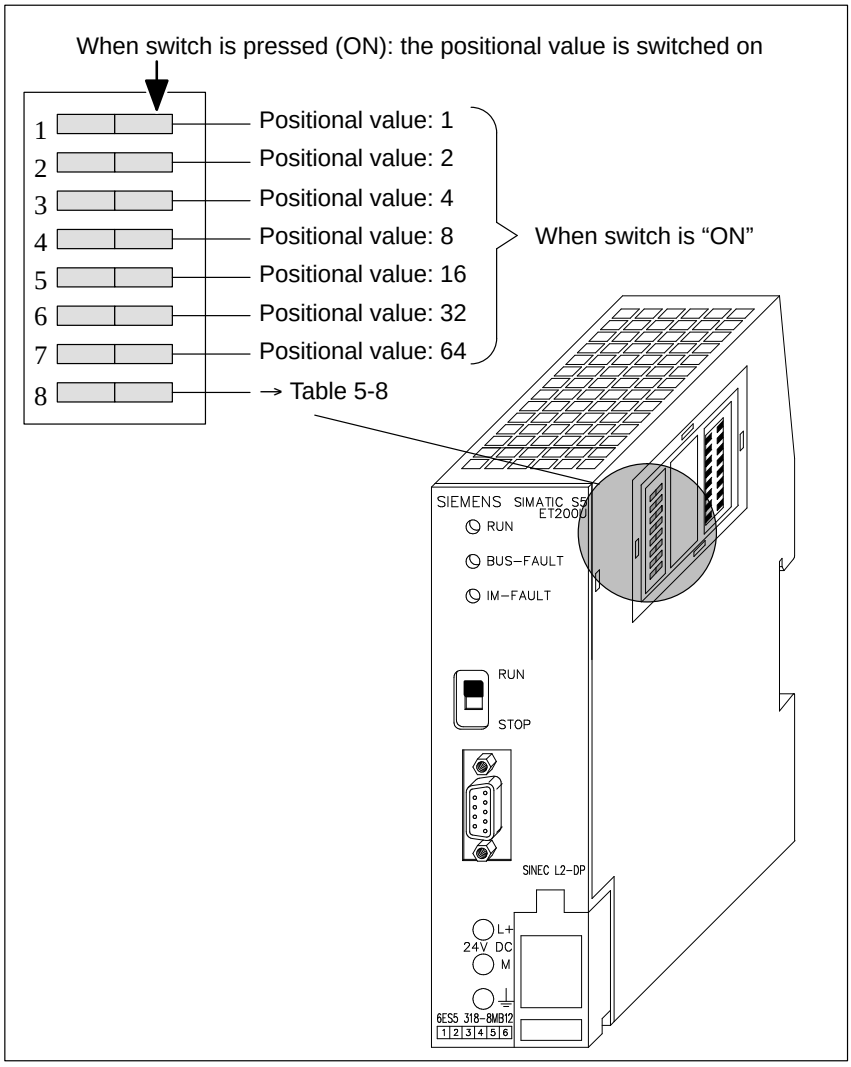

Figure 5-6 Location of the Bank of Switches for Setting the Station Number (ET 200U)

Setting Switch 8

Setting switch 8 results in different conditions:

Table 5-8 Function of Switch 8

Order No.	Function
318–8MB12	**DP Standard**: Bus protocol to PROFIBUS–DP draft standard (can be used as from COM ET 200 version 4.0). The slow mode must be set in a bit of the parameterization frame (→ Figure 5-5, → Section 5.1.1) **DP Siemens**: Bus protocol to DP Siemens. The ET 200U automatically switches into the slow mode when it identfies an IP 265.
318–8MC11	**DP Standard**: Bus parameters in accordance with PROFIBUS–DP (from COM ET 200, V 4.0). Slow mode must be set by means of a bit in the parameterization frame (→ Figure 5-5, → Section 5.1.1). **FMS–Norm**: Bus parameters in accordance with FMS standard. Slow mode must be set by means of a bit in the parameterization frame (→ Figure 5-5, → Section 5.1.1). The permissible parameter values are listed in Table 6-3 in Section 6.1.

Example of an “318–8MB12”

Set station number 52 and DP Standard:

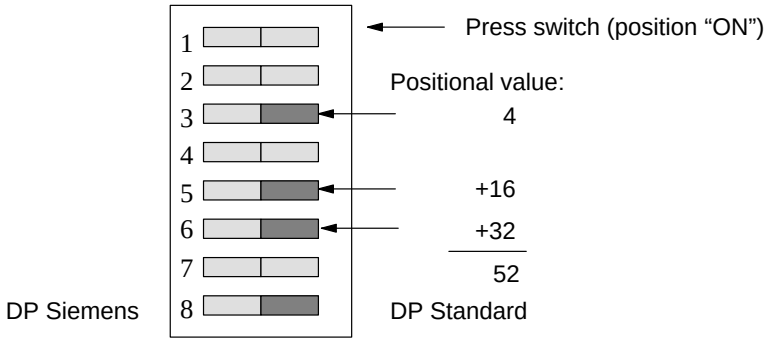

5.2.2 Starting Up an ET 200U Slave Station

After setting the station number on the bank of switches on the IM 318–B interface module, proceed as follows to start up and test your ET 200U slave station:

1. Use a CP 5410 S5–DOS/ST programmer–bus interface to link your programmer directly to the IM 318–B interface module.
2. Call up the SYSTEM START–UP/TEST screen of the COM ET 200 software package (press <F5> in the FUNCTIONS screen).
3. In the

   Station number:

   input field, enter the number of the connected ET 200U slave station.
4. Press <F6> (ENTER) to confirm the input.

Result: COM ET 200 establishes a link to the connected station, assigns parameters to the station, and displays the SYSTEM START–UP/TEST: MODULE SELECTION screen if the configuration in the program file and the actual station configuration match.

If the two configurations do not match, COM ET 200 reports an error in the message line. In such a case, you must go to the CONFIGURATION screen to correct the station configuration.



Caution

If you use a programmer on the bus to start up an ET 200U slave station while the bus is operating continuously, note the following: The IM 308–B interface module (in the master station) cannot control the slave station as long as the programmer has access to the slave station.

The following section describes the start–up and test for an ET 200U(DP Standard) slave station.

5.2.3 Using the SYSTEM START–UP/TEST Screen for an ET 200U(DP Standard) Slave Station

For starting up an ET 200U slave station, COM ET 200 provides two screens.

Select one slot in the SYSTEM START–UP/TEST: MODULE SELECTION screen. Then call up the SYSTEM START–UP/TEST: STATUS/CONTROL screen.

Proceed as follows:

1. Using the cursor control keys and <F5> (SELECT), select one slot (one module) whose input data you want to evaluate or whose outputs you want to force.

   Result: The selected module is marked with an asterisk "*". Pressing <F5> (SELECT) a second time cancels the selection.

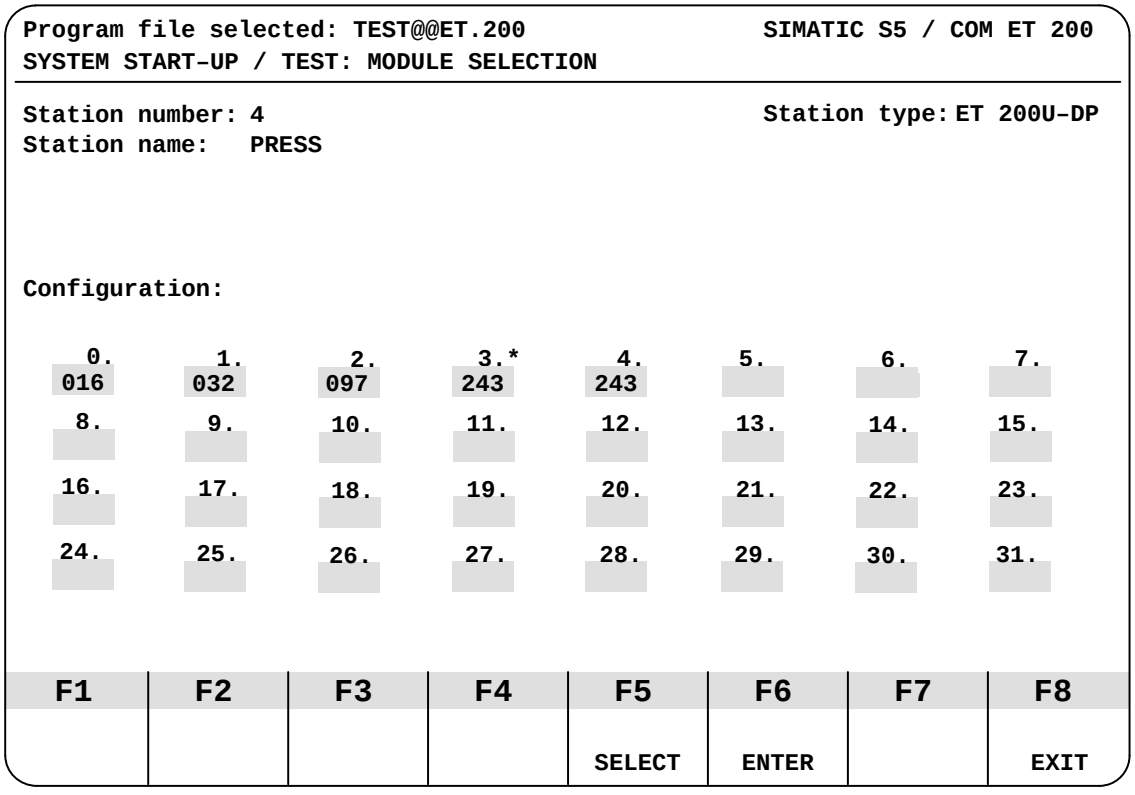

Figure 5-7 SYSTEM START–UP/TEST: MODULE SELECTION Screen

2. Press <F6> (ENTER) to confirm the selection.

Result: The SYSTEM START–UP/TEST: STATUS/CONTROL screen appears:

Digital modules are displayed in the “KM” format, analog modules in the “KH” format. The following example shows the IP 262 module (address identifier: 243 or 4AX) in the “KH” format:

```
Program file selected: B:TEST@@ET.200                SIMATIC S5 / COM ET 200
START–UP / TEST: STATUS/CONTROL
─────────────────────────────────────────────────────────────────────────────

Station number: 4                                    Station type: ET 200U–DP
Station name:   PRESS
Station status:


Slot: 3    Identifier: 243

Force      │
───────────┼─────────────────────────────────────────────────────────────────
Outputs    │    KH = 10FF  E012 2340 1234

           │
Status     │    Identifier–related diagnostics
───────────┼─────────────────────────────────────────────────────────────────
Inputs     │    KH = 0123  4EAB 3333 FDAB

Status of outputs is retained

┌──────┬──────┬──────┬──────┬──────┬──────┬──────┬──────┐
│  F1  │  F2  │  F3  │  F4  │      │      │      │  F8  │
│      │      │      │      │      │ ENTER│ HELP │ EXIT │
└──────┴──────┴──────┴──────┴──────┴──────┴──────┴──────┘
```

Figure 5-8 SYSTEM START–UP/TEST: STATUS/CONTROL Screen

Diagnostics Messages in the “...:STATUS/ FORCE” Screen

COM ET 200 version 4.0 provides extended diagnostics messages in this screen.

Up to 4 diagnostics messages are displayed in the “station status” field.

Another type of diagnostics is the identifier–related diagnostics (module diagnostics). If the word “identifier–related diagnostics” is displayed, a module has signalled a diagnostics status.

STATUS/FORCE Function

Press<F7> (HELP) to change KF format (fixed point number) to KH format (hexadecimal number) and vice versa.

3. Specify the status of the outputs that you want to force. Press <F6> (ENTER) to confirm the status.

Result: At the end of every cycle, COM ET 200 transfers output data to the selected station. The software requests input data and (station) diagnostics data. If problems have occurred, the diagnosis is displayed as plain text in the STATION STATUS field.

The assignment of the function keys changes:

F1	F2	F3	F4	F5	F6	F7	F8
					STOP		EXIT

To freeze the screen, that is, to stop the update of the input fields, proceed as follows:

4. Press <F6> (STOP).

Now you can set the outputs again.

STATUS Function

COM ET 200 displays the state of the inputs in the INPUTS field in KM format for digital modules or in KH format for analog modules.

Example

Inputs for a 4–channel 464–8MD11 module (module ID 083):

Channel	4	3	2	1
KH =	**0123**	**4EAB**	**3333**	**FDAB**

FORCE Function

In the OUTPUTS field, you can change the state of individual outputs (always shown as 0 when this screen appears). COM ET 200 displays the state of the outputs in KM format for digital modules or in KH format for analog modules.

Example

Outputs for a 482–8MA13 module (16–channel I/O module, ID 049):

Bit	15 8	7 0
KH =	**0110 0010**	**0001 0001**

FORCE with Load Circuit

You can execute the FORCE function with the load circuit turned on or off as follows:

FORCE with load circuit **turned off** :You can observe the effect of the forced outputs for digital modules by checking the output LEDs.

FORCE with load circuit **turned on** :You can observe the effect of the forced outputs directly at the I/Os.



Caution

Setting outputs when the load circuit is turned on can result in dangerous system states.

Set or reset outputs only under the circumstances listed in the following table!

Table 5-9 Resetting Outputs with Load Circuit Turned On

Version/ Revision Level	Outputs are Reset ...	Outputs are not Reset ...
IM 308–B (as from version 5)	• When you call up the “MODULE SELECTION” screen. • When you reset the outputs in the “MODULE SELECTION” screen. • When you exit from the “MODULE SELECTION” screen with <F8> (EXIT).	• When you power up the IM 308–B master interface module (STOP to RUN transition)

5.3 Diagnosing Faults for ET 200U(DP Standard)

In this Section

This section describes three alternatives for diagnosing faults:

- Using LEDs to diagnose problems (→ Section 5.3.1)
- Using COM ET 200 to diagnose problems(→ Section 5.3.2)
- Diagnosing faults with STEP 5 (→ Section 5.3.3)

Diagnosing faults with COM ET 200 in a STEP 5 program is described in detail in the **"ET 200 Distributed I/O System"** Manual.

5.3.1 Using LEDs to Diagnose Problems

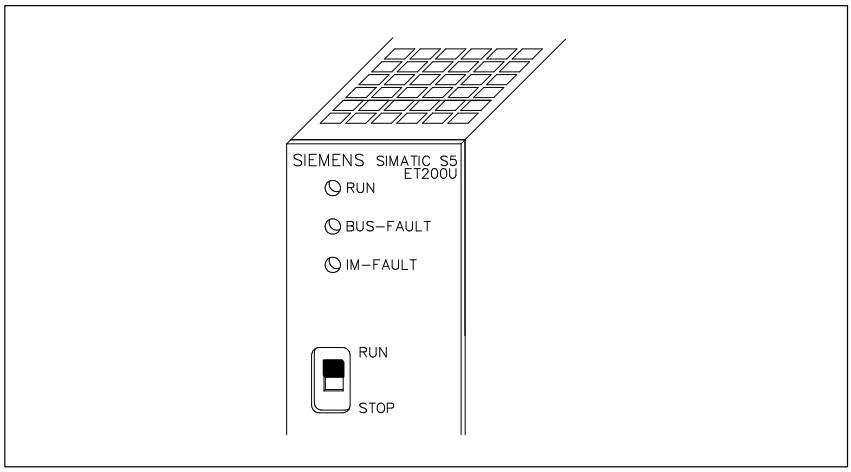

Figure 5-9 Fault LEDs on the ET 200U Interface Module (ET 200U Interface Module)

Table 5-10 LED Fault Messages on ET 200U Interface Module

LED	Optical Signal	Explanation
RUN	Lit	Normal operation (load voltage supply available)
BUS–FAULT	Lit	• Response time has run out and the IM 318–B interface module was not addressed. • During system start–up or power up: IM 318–B not parameterized yet. • No connection between SINEC L2–DP bus and slave station.
IM–FAULT	Lit or flashing	There is a fault in the I/O bus (e.g. a bus unit is defective).
BUS–FAULT and IM–FAULT	Lit	There is a hardware fault in the ET 200U interface module.
BUS–FAULT and IM–FAULT	Flashing	The configured station address is not within the permitted range (1 to 125).

5.3.2 Using COM ET 200 to Diagnose Problems

The COM ET 200 software provides the DIAGNOSTICS screen for diagnostics functions.

The following are prerequisites for using the diagnostics function:

- You have a programmer with a CP 5410 S5–DOS/ST programmer–bus interface connected to the SINEC L2–DP bus.
- You indicated “Programmer connected to the bus: Y” in the ET 200 SYSTEM PARAMETERS screen.

1. Press <F6> (DIAGNOSE) in the FUNCTIONS screen to call up the DIAGNOSTICS: OVERVIEW screen.

Result: The “DIAGNOSTICS: OVERVIEW” screen appears.

```
Program file selected: C: TEST@@ET.200              SIMATIC S5 / COM ET 200
DIAGNOSTICS: OVERVIEW
-------------------------------------------------------------------------------

Station number: 1                                   Station type: DP Master / V x.y
System name: Test system 4712


Station number:
3  5  14  15  26  37  48  123
```

F1	F2	F3	F4	F5	F6	F7	F8
Channel diagnost.							EXIT

Figure 5-10 DIAGNOSTICS: OVERVIEW Screen

COM ET 200 displays the following:

- The station number and the system name of the master station
- The firmware version of the IM 308–B interface module (in the master station)
- The numbers of the stations for which diagnostics data is available

2. Press <F1> (DIAGNOSE INDIVID.)

Result: COM ET 200 asks for a station number.

3. In the STATION NUMBER input field, enter the number of the faulty station that you want to investigate further.
4. Press <F6> (ENTER) to be able to evaluate the diagnostics messages of this station.

Result: COM ET 200 goes to another screen. The screen that appears next depends on the type of station you are investigating.

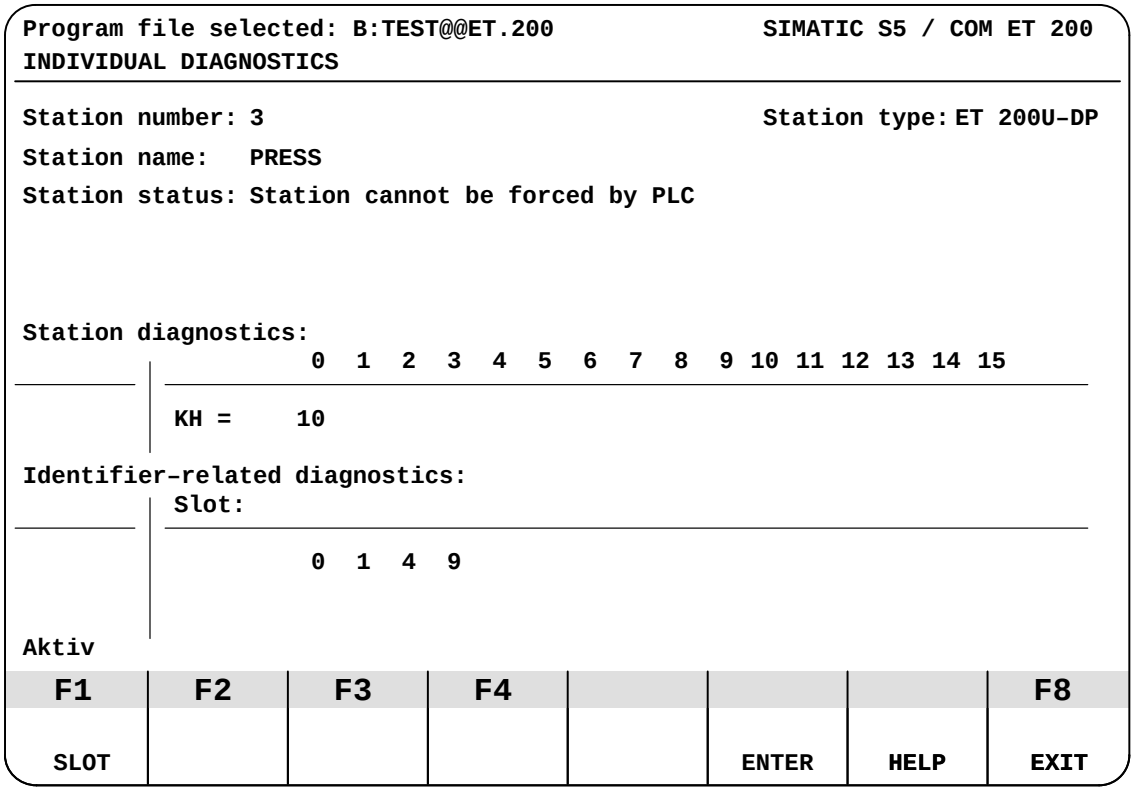

Figure 5-11 INDIVIDUAL DIAGNOSTICS Screen

Up to 4 diagnostic messages can be displayed in the STATION STATUS field.

STATION DIAGNOSTICS uses the “KH” format. See Figure 5–15 for details on the structure of the station diagnostics.

In the IDENTIFIER–RELATED DIAGNOSTICS field the slots are indicated from which the diagnostics signals originate.

5.3.3 Diagnosing Faults with STEP 5 (Station Diagnostics)

General Remarks on Diagnostics

With STEP 5 you can systematically localize and evaluate a fault:

Table 5-11 Diagnostics with STEP 5

Diagnostics	...
Diagnostics overview	Records all stations which have diagnostics data pending.
Diagnostics for parameter assign. and addressability	Records all stations which can be parameterized and addressed.
Station status	Provides data on the status of the slave stations.
Station diagnostics	Provides general data on the status of the slave stations.
Identifier–related diagnostics (module diagnostics)	Localizes the defective module in the ET 200U slave station.

The diagnostics for parameter assignment and addressability and the diagnostics overview are described in the "**ET 200 Distributed I/O System**" Manual, as they are applied to all slave stations.

To avoid misunderstandings, the two diagnostics bytes of the diagnostics word are referred to in this chapter as the "diagnostics address" and "diagnostics address + 1". The load and transfer operations in this chapter refer to the default diagnostics address 252.

If more than one diagnostics message is displayed, the last message remains on the screen.

Special Features of Requesting Diagnostics Using Page Addressing

When using page addressing, the diagnostics word is located in the basic page. Before you request diagnostics as described in this chapter, you must first of all "switch over" to the basic page number.

Example

The P area is addressed via pages. The basic page number of the IM 308–B interface module is "O" (PO). You want to request and evaluate diagnostics overview. You have accepted the default diagnostics address 252.

```
L KB 0          Page selection
T PY 255
L KY 127,n      Request diagnostics overview (n = 0, 1, 2 to 7)
T PW 252

L PW 252        Evaluate the diagnostics word
L KH 0000
!=F             Fault?
BEC
JU FBx          Evaluate the fault in FBx
```

Structure and Request of Station Diagnostics for ET 200U

The station status, the station diagnostics and the identifier–related diagnostics (module diagnostics) are described in this manual as they are typical for the ET 200U slave station.

The diagnostics function is loaded and transferred:

`L KY (Station number),(code)`	Station number: 3 to 124 Code: 0, ..., 7
`T PW 252`	Afterwards the station diagnostics is transferred into the “diagnostics address” byte (here I/O byte 252)

16 bytes per slave station are reserved for station status, station diagnostics and module diagnostics. The 16 bytes are organized in 8 words. They are structured as follows:

Table 5-12 Structure of Station Diagnostics and Module Diagnostics

Code	Diagnostics Address	Diagnostics Address + 1
0	Station status 1	Station status 2
1	Station status 3	Master address
2	Manufacturer identification	
3	Header	Station diagnostics
4	Header	Identifier–related diagnostics (module diagnostics) (slots 0 to 7)
5	Identifier–related diagnostics (module diagnostics) (slots 8 to 15)	Identifier–related diagnostics (module diagnostics) (slots 16 to 23)
6	Identifier–related diagnostics (module diagnostics) (slots 24 to 31)	Unassigned
7	Unassigned	Unassigned

Note

If a module signals diagnostics, a delay of up to 150 ms is possible between input into the station diagnostics and the following input into the identifier–related diagnostics.

Request Station Status

The bytes “station status 1 to 3” give information on the station. In the “master address” byte, the address of the master station, which has parameterized the slave station is indicated.

L KY n,0 **T PW 252**	The number of the slave station (n = station number) of which the station status is requested must be stored in the “diagnostics address” byte; in the “diagnostics address + 1” byte, the code for “station status 1 and station status 2” (= 0) has to be stored
	or
L KY n,1 **T PW 252**	“Station status 3 and master address” (= 1)

The IM 308–B then writes the diagnostics message into the I/O word “diagnostics address”.

Read Station Status

L KH 0004	If code = 0
or	or
L KH 0000	if code = 1 and master station number = 1
L PW 252	Load diagnostics word
!=F	No fault?
BEC	
JU FBx	Evaluate fault in FBx.

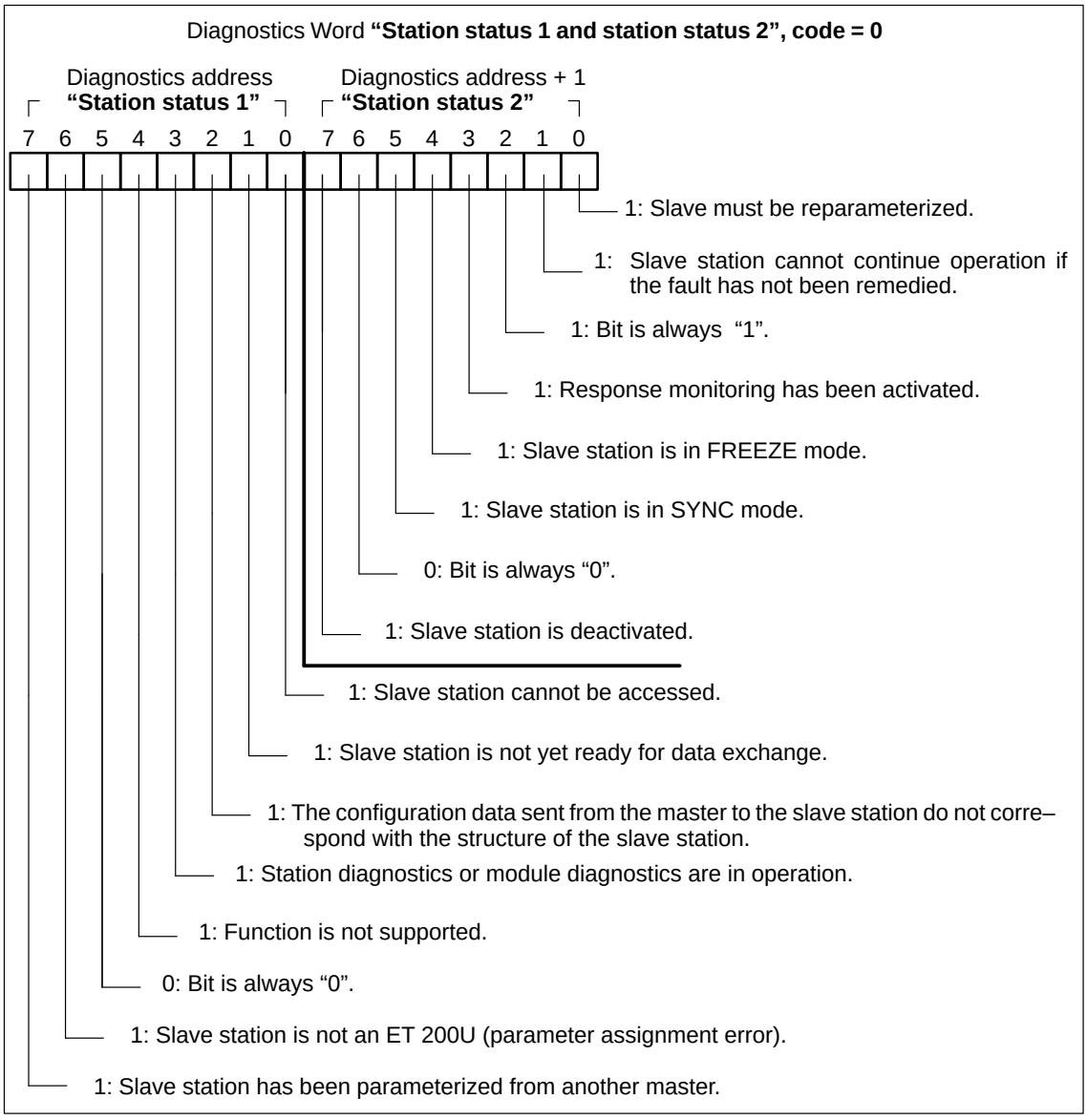

Figure 5-12 Structure of the Diagnostics Word after Request of the Station Status (Station Status 1 and Station Status 2)

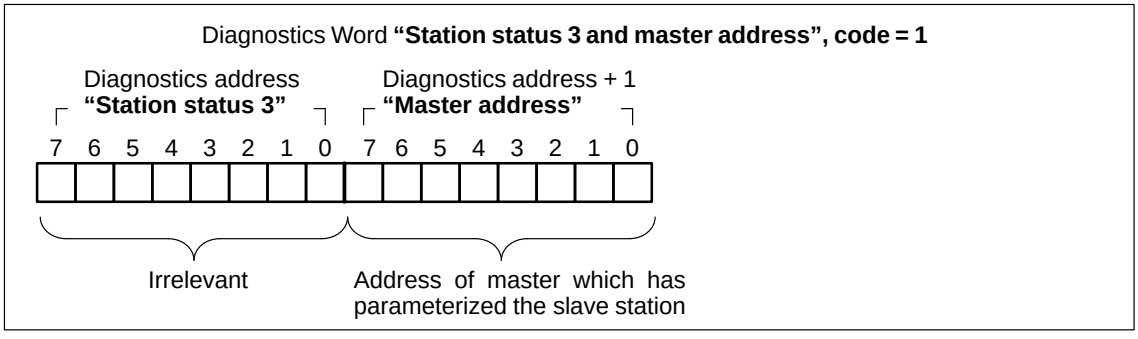

Figure 5-13 Structure of the Diagnost. Word after Request of the Station Status (Station Status 3 and Master Address)

Request Manufacturer Identification

The “manufacturer identification” byte describes the type of slave station.

```
L KY n,2
T PW 252
```

The number of the slave station (n = station number) from which the manufacturer identification is requested must be stored in the byte “diagnostics address”; in the byte “diagnostics address + 1” the code for the “manufacturer identification” (= 2) has to be stored.

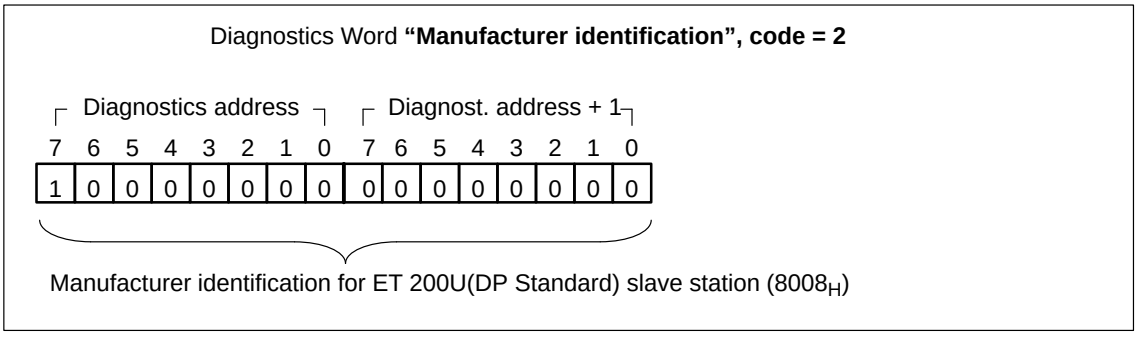

Figure 5-14 Structure of the Diagnostics Word after Request of the Manufacturer Identification

Request Station Diagnostics

The station diagnostics provides general information on the ET 200U slave station.

```
L KY n,3
T PW 252
```

The number of the slave station (n 0 station number) from which station diagnostics is requested must be stored in the “diagnostics address” byte; the code for “station diagnostics” (= 3) is to be stored in the “diagnostics address + 1” byte.

The IM 308–B interface module then writes the diagnostics message in the I/O word “diagnostics address”.

Read Station Diagnostics

```
L KH 0201
L PW 252      Load diagnostics word
!=F           No fault?
BEC
JU FBx        Evaluate fault in the FBx.
```

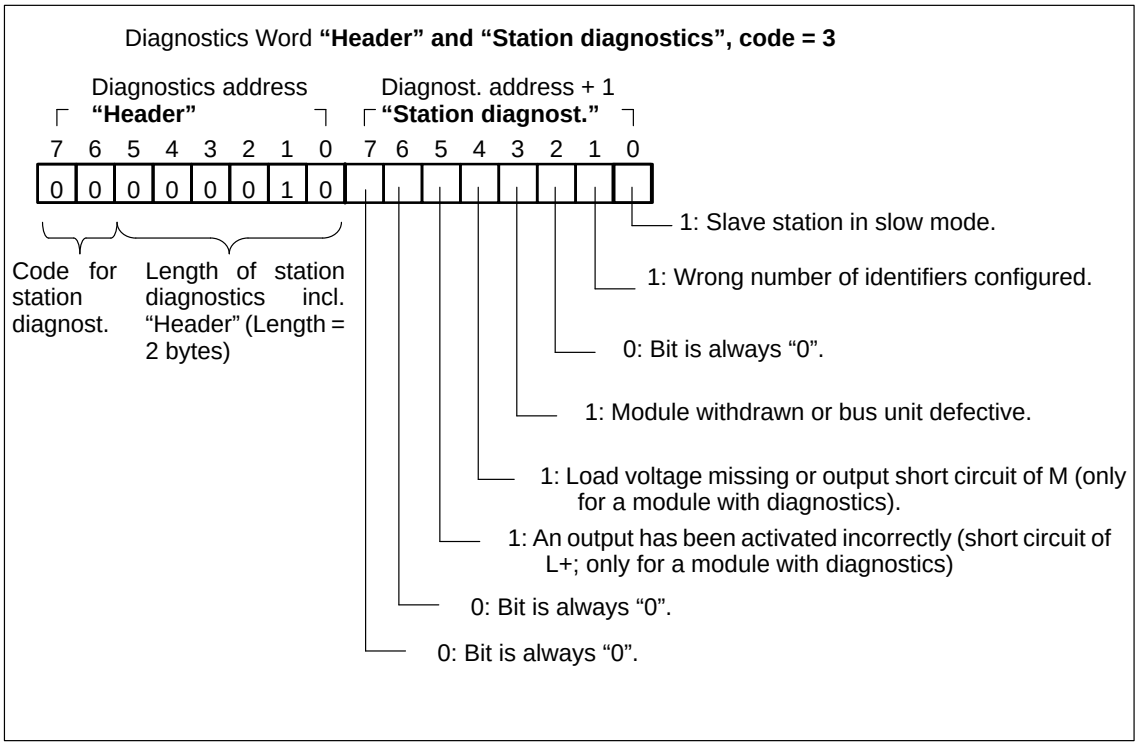

Figure 5-15 Structure of the Diagnostics Word after Request of Station Diagnostics

Request Module Diagnostics

Module diagnostics tells you which module in the ET 200U slave station is faulty.

```
L KY n,4
T PW 252
```
The number of the slave station (n = station number) from which module diagnostics is requested must be stored in the "diagnostics address" byte; in the "diagnostics address + 1" byte, the code for "header" and "module diagnostics (slots 0 to 7)" (= 4) is to be stored

or

```
L KY n,5
T PW 252
```
"Module diagnostics (slots 8 to 15) and (slots 16 to 23)" (= 5)

or

```
L KY n,6
T PW 252
```
"Module diagnostics (slots 24 to 31)" (= 6)

The IM 308–B interface module then writes the diagnostics message into the I/O word "diagnostics address".

Read Module Diagnostics

```
L KH 4500
or
L KH 0000
L PW 252
!=F
BEC
JU FBx
```
If code = 4
or
if code = 5, 6
Load diagnostics word
No fault?
Evaluate fault in the FBx.

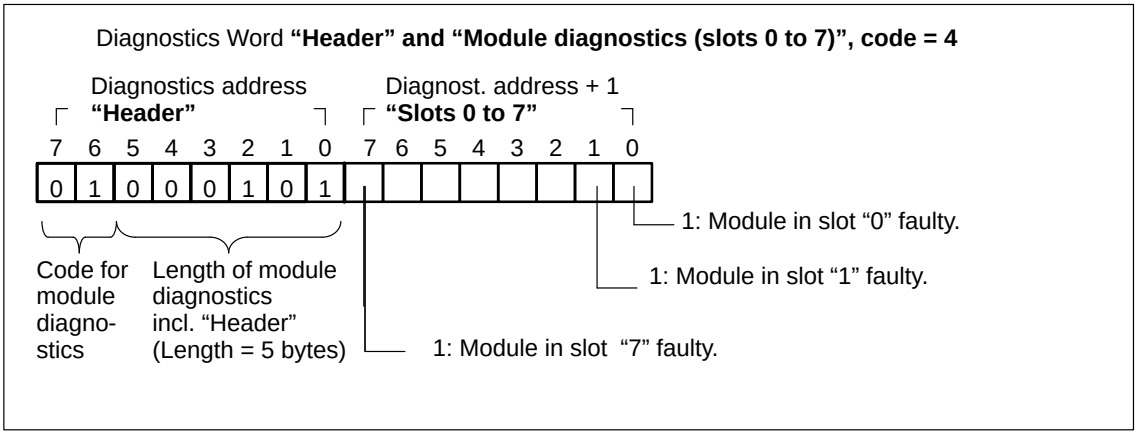

Figure 5-16 Structure of the Diagnostics Word after Request of Module Diagnostics (Header and Slots 0 to 7)

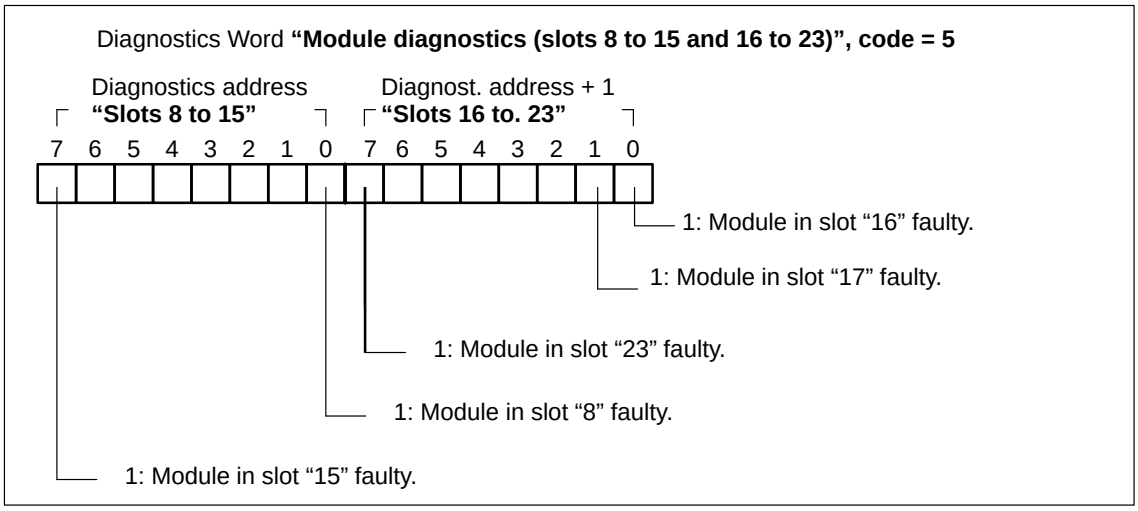

Figure 5-17 Structure of the Diagnostics Word after Request of Module Diagnostics (Slots 8 to 15 and 16 to 23)

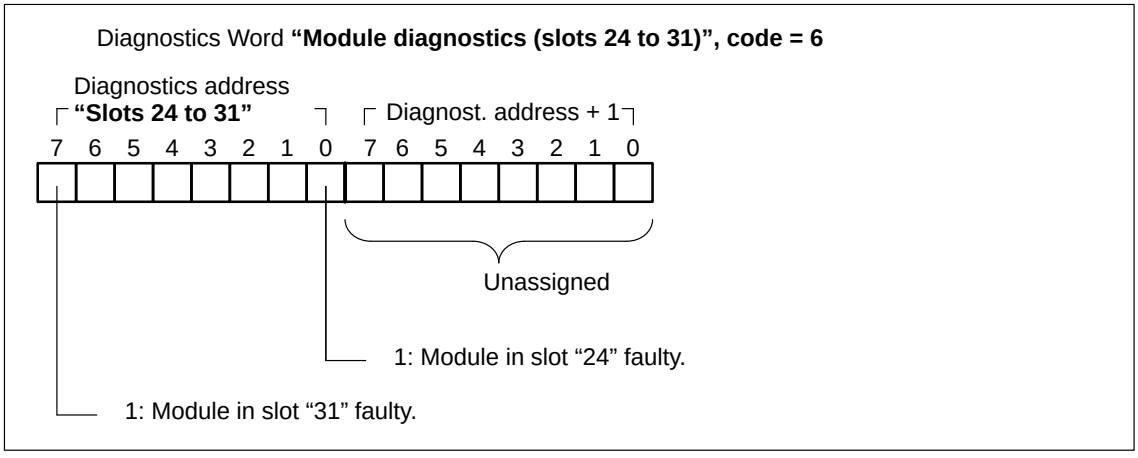

Figure 5-18 Structure of the Diagnostics Word after Request of Module Diagnostics (Slots 24 to 31)

ET 200U(DP Standard/FMS): Modes, Settings and Communications Capabilities of the IM 318–C

6

In this Chapter 6-1
For Reference 6-1
Prerequisites for this Chapter 6-1

6.1 Modes of the IM 318–C 6-2
What is an IM 318–C? 6-2
Which Modes are Possible? 6-2
Requirements for Operating an IM 318–C 6-5
Differences 6-6

6.2 Settings of the IM 318–C 6-8
Setting the Station Number and Switch 8 6-8

6.3 ET 200U(DP Standard/FMS) Communicating in Accordance with PROFIBUS Standard (Part 2) 6-10

6.3.1 FMS Services 6-11
Initiate 6-11
Abort 6-11
Reject 6-11
Identify 6-12
Get–OV 6-12
Status 6-12
Read 6-12
Write 6-12
Event–Notification 6-12
Acknowledge–Event–Notification 6-12
Alter–Event–Condition–Monitoring 6-12

6.3.2 Object List (OV) 6-13
Static Object List 6-13
Slot 6-14
Diagnostics Data 6-19
Parameter Data 6-25
DP Inputs 6-27
FMS Inputs 6-27
DP Outputs 6-28
FMS Outputs 6-28
Diagnostics Event (with “Event–Notification”) 6-29

6.3.3	List of Communications Links (KBL)	6-30
	KR	6-33
	Type	6-33
	ATTR	6-33
	Local LSAP	6-33
	RSAP	6-33
	RADR	6-33
	SCC	6-33
	RCC	6-33
	SAC	6-33
	RAC	6-33
	ACI, CCI	6-34
	Max. PDU Size	6-34
	Features Supported	6-34
6.4	Using LEDs to Diagnose Problems	6-35
6.5	Example of Programming a Link between an ET 200U(FMS) and a CP 5431 FMS	6-36
6.5.1	Programming a Cyclic Link (MSZY)	6-37
6.5.2	Programming an Acyclic Link (MSAZ)	6-39

Figures

6-1	Location of the Bank of Switches for Setting the Station Number	6-9
6-2	FMS Services Supported by the ET 200U(DP Standard/FMS)	6-11
6-3	Fault LEDs on the ET 200U Interface Module	6-35
6-4	“Input/Output (I/O) Areas” Screen	6-37
6-5	“CI Editor” Screen	6-38
6-6	“CP Link Programming” Screen	6-39
6-7	“Request Editor Initialisation “ Screen	6-40
6-8	“Request Editor Service Selection” Screen	6-41
6-9	“Request Editor” Screen	6-42

Tables

6-1	Modes of the M 318–C	6-4
6-2	Requirements for Operating an IM 318–C	6-5
6-3	Bus Parameters to be Set if at Least One FMS Master is on the Bus	6-5
6-4	Differences between the Various Modes of the IM 318–C	6-6
6-5	Setting the Station Number and Switch 8	6-8
6-6	Structure of the Object List of the ET 200U(DP Standard/FMS)	6-13
6-7	“Input” or “Output” Object of the “Simple–Variable” Type	6-14
6-8	“Input” or “Output” Object of the “Array” Type	6-14
6-9	Coding the I/O Modules in an ET 200U(DP Standard/FMS)	6-15
6-10	Coding the I/O Modules in an ET 200U(DP Standard/FMS)	6-16
6-11	Coding the I/O Modules in an ET 200U(DP Standard/FMS)	6-17
6-12	Coding the I/O Modules in an ET 200U(DP Standard/FMS)	6-18
6-13	“Diagnostics Data” Object	6-19
6-14	Structure of the Diagnostics Messages of the ET 200U(DP Standard/FMS)	6-19
6-15	Meaning of Station Status 1	6-20
6-16	Meaning of Station Status 2	6-21
6-17	Meaning of the “Station Diagnostics” Header	6-22
6-18	Information Content of Station Diagnostics	6-22
6-19	Meaning of the “Module Diagnostics” Header	6-23
6-20	Information Content of Module Diagnostics (Slots 0 to 7)	6-23
6-21	Information Content of Module Diagnostics (Slots 8 to 15)	6-24
6-22	Information Content of Module Diagnostics (Slots 16 to 23)	6-24
6-23	Information Content of Module Diagnostics (Slots 24 to 31)	6-24
6-24	“Parameter Data” Object	6-25
6-25	Meanings of the Parameter Data	6-26
6-26	“DP Inputs” Object	6-27
6-27	“FMS Inputs” Object	6-27
6-28	“DP Outputs” Object	6-28
6-29	“FMS Outputs” Object	6-28
6-30	“Diagnostics Event” Object	6-29
6-31	Master–Slave, Cyclic, Read	6-30
6-32	Master–Slave, Cyclic, Write	6-30
6-33	Master–Slave, Cyclic, with Slave Initiation, Read	6-30
6-34	Master–Slave, Cyclic, with Slave Initiation, Write	6-31
6-35	Master–Slave, Acyclic, with Slave Initiation	6-31
6-36	Master–Slave, Acyclic	6-31
6-37	Master–Slave, Acyclic, with Event Acknowledgement for Cyclic Links	6-32
6-38	Types of Link of the ET 200U(DP Standard/FMS)	6-33
6-39	LED Fault Messages from ET 200U	6-35

ET 200U(DP Standard/FMS): Modes, Settings and Communications Capabilities of the IM 318–C

6

In this Chapter

This chapter describes the following:

- Modes of the IM 318–C (→ Section 6.1)
- Modes of the IM 318–C (→ Section 6.2)
- Communications capabilities of the IM 318–C via PROFIBUS (→ Section 6.3)
- Diagnosing faults using the display elements (→ Section 6.4)
- Example of programming a link between the ET 200U(FMS) and the CP 5431 FMS (→ Section 6.5)
- Explanation of the terms used in the glossary (→ Appendix B)

For Reference

Please refer to

- Section 6.3.2 for the structure of the object list (Table 6-6)
- Section 6.3.3 for the list of communication links

Prerequisites for this Chapter

We assume that you have already gained experience regarding PROFIBUS connectivity.

This chapter presupposes that you are already familiar with the following standards and protocol profile:

- PROFIBUS standard DIN 19245, Parts 1 and 2
- Sensors/actuators profile

6.1 Modes of the IM 318–C

What is an IM 318–C?

An IM 318–C slave interface module integrates both the connections for SINEC L2–DP (DP Standard) and FMS in one interface.

The IM 318–C can be accessed with both the DP Standard and FMS protocols via the same bus cable.

Which Modes are Possible?

The IM 318–C can be operated in four different modes:

- **ET 200U(DP Standard)**

  One DP master is on the bus. The ET 200U(DP Standard) is configured using COM ET 200.

  The DP master reads the inputs and sets the outputs.

- **ET 200U(FMS)**

  One FMS master is on the bus. The data of the ET 200U(FMS) are entered in the object list.

  The FMS master reads the inputs and sets the outputs.

- **ET 200U with mixed configuration** (FMS has read access to the ET 200U)

  A DP master plus an FMS master are on the bus. The ET 200U with all its I/O modules is configured exclusively with COM ET 200.

  The DP master reads the inputs of the ET 200U and sets the outputs. The FMS master has the right to read the I/O modules assigned to the DP master but has no write access.

- **Combi–slave** (both the FMS master and DP master have full access to the I/O modules of the ET 200U)

  One DP master and FMS master each are on the bus. The I/O modules of the combi–slave are divided up between the DP master and FMS master.

  DP master: The DP master reads the inputs and sets the outputs of the I/O modules assigned to it.

  The DP master has neither read nor write access to the I/O modules assigned to the FMS master.

  FMS master: The FMS master reads the inputs and sets the outputs of the remaining I/O modules, that is those assigned to it.

  The FMS master has read access to the I/O modules assigned to the DP master but no permission to write.

Note

The I/O modules in the combi–slave are automatically assigned when parameterizing the ET 200U with COM ET 200.

The I/O modules from slot 0 to the last parameterized (DP master) I/O module are allocated to the DP master.

The FMS master is assigned the remaining I/O modules.

Table 6-1 Modes of the M 318–C

Operation of IM 318–C as ...	**Configuration**	**Advantages**
ET 200U(DP Standard)	DP master (read/write access) 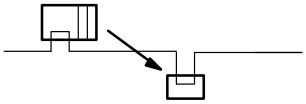 ET 200U(DP Standard)	An IM 318–C can also be operated in a SINEC L2–DP LAN where only the DP Standard protocol is used.
ET 200U(FMS)	FMS master (read/write access) 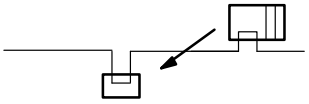 ET 200U(FMS)	I/O modules of the ET 200U spectrum of I/O modules can be used with the FMS protocol.
ET 200U in a mixed configuration	DP master (read/write access) FMS master (read access only) 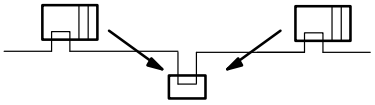 ET 200U in a mixed configuration	Inputs/outputs of the ET 200U used in a mixed configuration can be read in parallel with the FMS protocol and evaluated, for example, on a PC.
Combi–slave	DP master (read/write access) FMS master 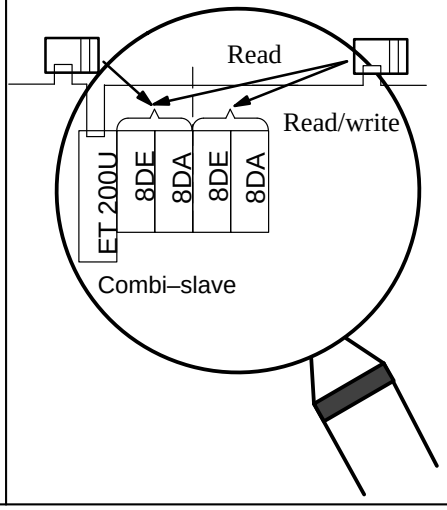	The inputs/outputs of the combi–slave can be read in parallel via FMS. Additionally, you can plug in I/O modules to which the FMS master has exclusive read and write access. All I/O modules, except CPs and IPs, are available for a combi–slave configuration.

Requirements for Operating an IM 318–C

The following Table lists the hardware and software requirements and the relevant bus parameters for operating an IM 318–C:

Table 6-2 Requirements for Operating an IM 318–C

Operation of IM 318–C as ...	Requirements
ET 200U(DP Standard)	• COM ET 200 (version 4.0) • IM 308–B from revision level 5 (printed on module) or from software version 4.0 (indicated in COM ET 200) • Type file: SI8009T?.200
ET 200U(FMS)	• FMS master with PROFIBUS protocol, Parts 1 and 2
ET 200U in a mixed configuration	• COM ET 200 (version 4.0) • IM 308–B from revision level 5 (printed on module) or from software version 4.0 (indicated in COM ET 200) • Type file: SI8009T?.200 • FMS master with PROFIBUS protocol, Parts 1 and 2.
Combi–slave	• COM ET 200 (version 4.0) • IM 308–B from revision level 5 (printed on module) or from software version 4.0 (indicated in COM ET 200) • Type file: SI8009T?.200 • FMS master with PROFIBUS protocol, Parts 1 and 2.

Table 6-3 Bus Parameters to be Set if at Least One FMS Master is on the Bus

Baud rate (kbit/s)	**9.6**	**19.2**	**93.75**	**187.5**	**500**	**1500**
Default values for FMS master						
T_{SL} (T_{Bit})	125	250	600	1500	3500	3500
min_T_{SDR} (T_{Bit})	30	60	125	250	255	255
max_T_{SDR} (T_{Bit})	60	120	250	500	1000	1000
T_{SET} (T_{Bit})	1	1	1	1	1	60
T_{QUI} (T_{Bit})	0	0	0	0	0	0
G	1	1	1	1	1	1
HSA	126	126	126	126	126	126
max. retry limit	1	1	1	1	1	1
Default values for ET 200U if switch 8 is set to “FMS Standard”						
min_T_{SDR} (T_{Bit})	30	60	125	250	255	255
Default values for ET 200U if switch 8 is set to “DP Standard”						
min_T_{SDR} (T_{Bit})	11	11	11	11	11	11

Differences

The following Table lists the differences between the

- ET 200U(DP Standard)
- ET 200U(FMS)
- ET 200U in a mixed configuration
- Combi–slave

that you have to take into consideration when starting up the system. The differences will be described in more detail in the section dealing with this topic.

Table 6-4 Differences between the Various Modes of the IM 318–C

Characteristics	**ET 200U (DP Standard)**	**ET 200U(FMS)**	**ET 200U in Mixed Config.**	**Combi–Slave**
Required settings:				
Valid station number:	3 to 124	1 to 125	3 to 124	3 to 124
Setting of switch 8:	DP Standard	DP Standard[1]	DP Standard[1]	DP Standard[1]
Parameter data, bit 2 (mode of ET 200U)	Bit 2 = 0	Bit 2 = 0	Bit 2 = 0	Bit 2 = 1
Result:				
Operation of CPs / IPs	Possible	Possible	Possible	**Impermissible!**
t_{P-Bus}[2] delay extended by	0.4 ms	0.4 ms	0.4 ms	0.4 ms
t_{P-Bus}[2] delay for each additional FMS service extended by	–	4 ms	4ms	4ms
Diagnostics messages • Stations statuses 1 to 2 • DP master address	• → Figure 5-12, Section 5 • Station number of DP master	• → Tables 6-15, and 6-16, Section 6 • Master address: FF_H	• → Tables 6-15 and 6-16, Section 6 • Station number of DP master	• → Tables 6-15 and 6-16, Section 6 • Station number of DP master

1: Only if the FMS master keeps its ready time within the limit $T_{RDY} < min_T_{SDR} = 11T_{bit}$. Otherwise, you will have to select FMS standard.
2: Please refer to Appendix C of the “ET 200 Distributed I/O System” Manual for the response times.

Table 6-4 Differences Between the Various Modes of the IM 318–C (Continued)

Characteristics	**ET 200U (DP Standard)**	**ET 200U(FMS)**	**ET 200U in a Mixed Config.**	**Combi–Slave**
Access to FMS objects: • DP inputs • DP outputs • FMS inputs • FMS outputs	Irrelevant	 • Irrelevant • Irrelevant • Read • Read / write	 • Read • Read • Irrelevant • Irrelevant	 • Read • Read • Read • Read / write
Meaning of BF LED (BUS FAULT):	→ Table 5-10, Section 5.3.1	→ Table 6-39, Section 6.4	→ Table 6-39, Section 6.4	→ Table 6-39, Section 6.4
Failure of the DP master	All outputs are set to “0”.[1]	–	All outputs are set to “0”.[1]	Outputs assigned to the DP master are set to “0”.[1] The states of the outputs assigned to the FMS master are retained.
Failure of the FMS master	–	All outputs are set to “0”.[2]	No influence on ET 200U	Outputs assigned to the FMS master are set to “0”.[2] The states of the outputs assigned to the DP master are retained.

1: After response monitoring time has elapsed.
2: After link monitoring time has elapsed.

The IM 318–C can be operated as DP Standard slave and/or FMS slave:

If the IM 318–C is Operated as ...	**... Refer to**
• ET 200U(DP Standard)	Section 5
• ET 200U(FMS) • ET 200U in a mixed configuration • Combi–slave	Section 6.2

6.2 Settings of the IM 318–C

Setting the Station Number and Switch 8

There are two possibilities for setting the IM 318–C which also depend on the mode selected:

1. Set a valid station number on the bank of switches on the IM 318–C (→ Table 6-5).
2. Set switch 8 on the bank to “DP Standard”.

   If the ready period of the FMS master cannot be set within the range $T_{RDY} < \text{min_}T_{SDR} = 11T_{Bit}$, select “FMS Standard”. This, however, extends the response times (→ Table 6-3).

Table 6-5 Setting the Station Number and Switch 8

Settings	**ET 200U (FMS)**	**ET 200U in a Mixed Config.**	**Combi–Slave**
Valid station number:	1 to 125	3 to 124	3 to 124
Setting of switch 8:	DP Standard	DP Standard	DP Standard

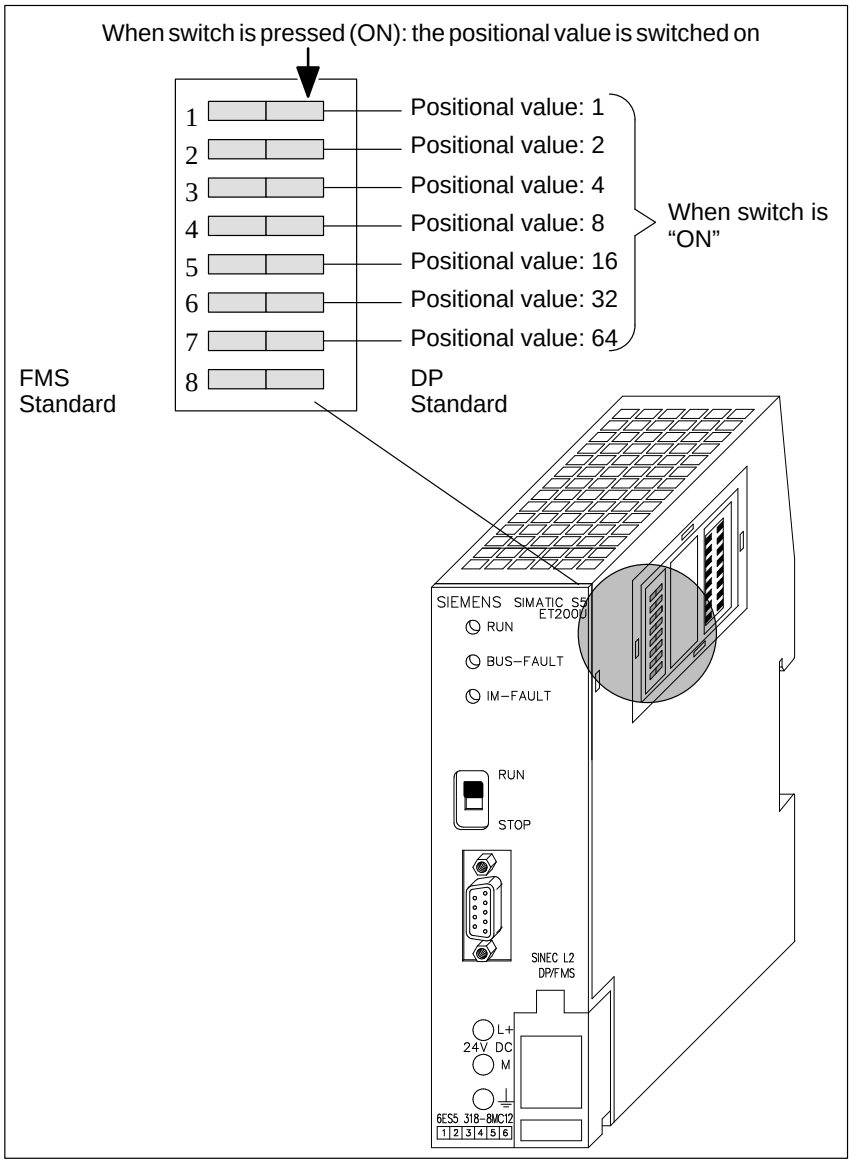

Figure 6-1 Location of the Bank of Switches for Setting the Station Number

Example Set station number 52 and "DP Standard":

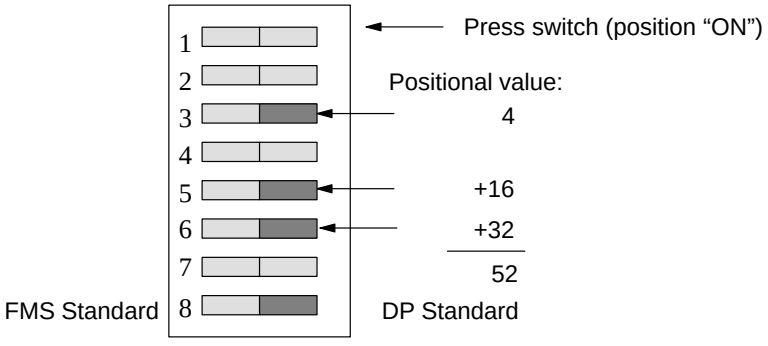

6.3 ET 200U(DP Standard/FMS) Communicating in Accordance with PROFIBUS Standard (Part 2)

This section informs you of

- the FMS services available,
- the structure of the object list,
- the structure of the list of communication links.

The following section describes the use of an ET 200U(DP Standard/FMS). An ET 200U(DP Standard/FMS) is equivalent to an ET 200U operated as

- ET 200U(FMS),
- ET 200U in a mixed configuration or as
- Combi–slave.

6.3.1 FMS Services

The ET 200U(DP Standard/FMS) supports the FMS services shown in the following diagram. The FMS services correspond to the definitions in the sensors/actuators profile.

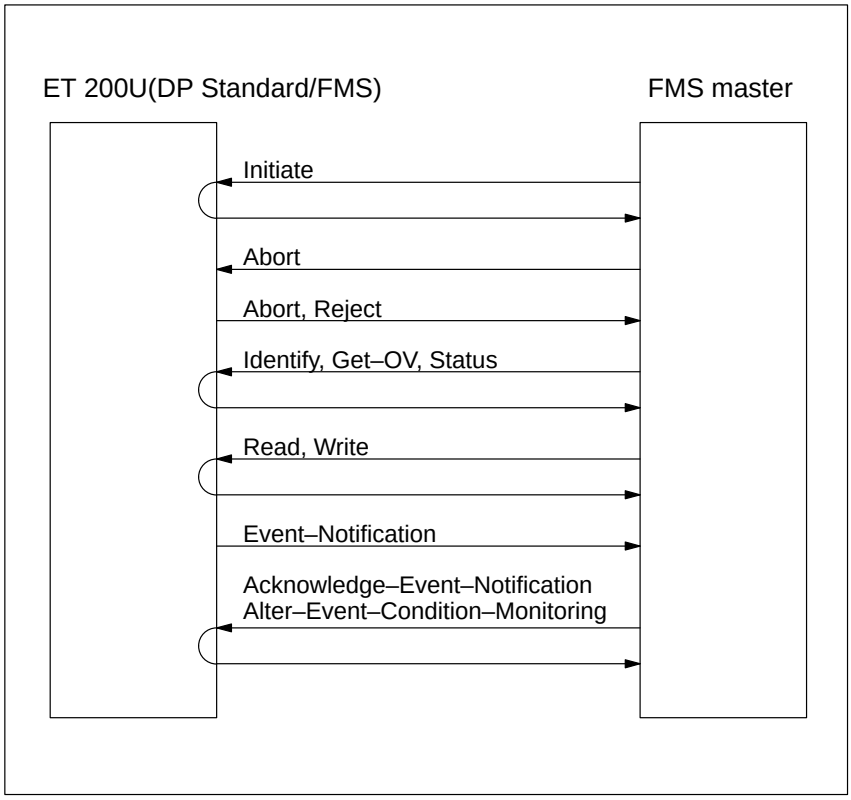

Figure 6-2 FMS Services Supported by the ET 200U(DP Standard/FMS)

Initiate

"Initiate" establishes a link between the FMS master and the ET 200U(DP Standard/FMS).

Abort

"Abort" closes down the connection between the FMS master and the ET 200U(DP Standard/FMS). The link can be cancelled either by the FMS master or the ET 200U(DP Standard/FMS).

Reject

"Reject" is used by the ET 200U(DP Standard/FMS) to reject an impermissible FMS service. Possible origin of an impermissible FMS service:

- FMS service of the FMS master cannot be processed (FMS service is not permissible or not executable)

Identify

"Identify" is used by the ET 200U(DP Standard/FMS) to transfer the following data:

vendor_name:	SIEMENS AG
model_name:	ET 200U–DP/FMS
revision:	V 1.0

Get–OV

The "Get–OV" FMS service is used by the FMS master to read the object description of the ET 200U(DP Standard/FMS). The ET 200U(DP Standard/FMS) supports both the short and the extended form of "Get–OV" (OV = Object list).

Status

"Status" is used by the FMS master to read the status of the bus interface module (logical status) and the operating state (physical status) of the ET 200U(DP Standard/FMS).

The "Local–Detail" attribute is not supported by the ET 200U(DP Standard/FMS).

Read

"Read" can be used by the FMS master to read the objects assigned to the ET 200U(DP Standard/FMS).

Write

"Write" can be used by the FMS master to obtain write access to the objects assigned to the ET 200U(DP Standard/FMS).

Event–Notification

The "Event–Notification" FMS service is used by the ET 200U(DP Standard/FMS) to transmit diagnostics messages to the FMS master. The diagnostics data are sent in connection with the diagnostics event.

The "Event–Notification" FMS service is possible only in conjunction with the link types MSZY_SI and MSAZ_SI. If these types of links are not set up, the ET 200U(DP Standard/FMS) is not able to transfer diagnostics events to the FMS master.

Acknowledge–Event–Notification

"Acknowledge–Event–Notification" can be used by the FMS master to acknowledge receipt of a diagnostics message from the ET 200U(DP Standard/FMS). An acknowledgement by the ET 200U(DP Standard/FMS) is not required.

Alter–Event–Condition–Monitoring

"Alter–Event–Condition–Monitoring" can be used by the FMS master to enable or disable events, e.g. diagnostics messages via "Event–Notification".

In the default setting, events are disabled for the ET 200U(DP Standard/FMS).

6.3.2 Object List (OV)

The FMS services “Read” and “Write” can be used by the FMS master to access objects defined in the object list (OV).

The ET 200U(DP Standard/FMS) always generates the full object list, even in a mixed configuration or as a combi–slave.

Static Object List

The individual objects of the ET 200U(DP Standard/FMS) are addressed via an index in the static object list. The following table illustrates how the object list of the ET 200U(DP Standard/FMS) is structured.

Table 6-6 Structure of the Object List of the ET 200U(DP Standard/FMS)

Meaning	**Designation**	**Index (Decimal) Input**	**Index (Decimal) Output**
Slot 0	Input / Output	30	31
Slot 1	Input / Output	32	33
Slot 2	Input / Output	34	35
Slot 3	Input / Output	36	37
Slot 4	Input / Output	38	39
Slot 5	Input / Output	40	41
Slot 6	Input / Output	42	43
Slot 7	Input / Output	44	45
...			
Slot 31	Input/Ouput	92	93
Diagnostics data	Diagnostics data	–	110
Parameter data	Parameter data	–	120
DP inputs	DP Input	–	130
FMS inputs	FMS Input	–	140
DP outputs	DP Output	–	150
FMS outputs	FMS Output	–	160
Diagnostics event (with FMS service “Event Notification)	Diagnost. event	–	170

The index of the slot of an I/O module can be calculated as follows:

Index of an input slot	= (Slot × 2) + 30
Index of an output slot	= (Slot × 2) + 31

Slot

Each I/O module is assigned an object in the static object list. For I/O modules with inputs and outputs, the ET 200U(DP Standard/FMS) generates two objects (one in the input area and one in the output area).

The objects have the object code “Simple–Variable” or “Array”. An array can also be accessed via a subindex.

The following tables show the structure of the “input” or “output” object for both the “Simple–Variable” and “Array”. On the following pages, the coding of I/O modules is described.

Table 6-7 “Input” or “Output” Object of the “Simple–Variable” Type

INDEX:	→ Table 6-6; permissible index range: 30 to 93
OBJECT_CODE:	7 (Simple–Variable), → Tables 6-9 to 6-12
DATA_TYPE_INDEX:	Type, → Tables 6-9 to 6-12
LENGTH:	→ Tables 6-9 to 6-12
PASSWORD:	–
ACCESS_GROUPS:	–
ACCESS_RIGHTS:	→ Tables 6-9 to 6-12
LOCAL ADDRESS:	–
NAME[16]:	Input or output
EXTENSION_LENGTH:	0

Table 6-8 “Input” or “Output” Object of the “Array” Type

INDEX:	→ Table 6-6; permissible index range: 30 to 93
OBJECT_CODE:	8 (array), → Tables 6-9 to 6-12
DATA_TYPE_INDEX:	Type, → Tables 6-9 to 6-12
LENGTH:	→ Tables 6-9 to 6-12
NUMBER_OF_ELEMENTS:	2 or 4 (depending on number of channels in I/O module)
PASSWORD:	–
ACCESS_GROUPS:	–
ACCESS_RIGHTS:	→ Table 6-9 to 6-12
LOCAL ADDRESS:	–
NAME[16]:	Input or output
EXTENSION_LENGTH:	0

Table 6-9 Coding the I/O Modules in an ET 200U(DP Standard/FMS)

Order No. of Module	Type	Length	Access Mode[1]	Object-Code[2]	Delay (ms)[3]	Current Con-sumption (mA)	Power Loss (W)
Digital input modules 6ES5 ...:							
420–8MA11	unsigned8	1	R	7	2.5 to 5	16	4.5
421–8MA12	unsigned8	1	R	7	2.3 to 4.5	34	4.5
422–8MA11	unsigned16*	2*	R	7	3 to 4	50	4.5
430–8MB11	unsigned8	1	R	7	1.4 to 5	5	2
430–8MC11	unsigned8	1	R	7	10 to 20	16	2.8
430–8MD11	unsigned8	1	R	7	10 to 20	16	2.5
431–8MA11	unsigned8	1	R	7	4 to 5.5	32	2
431–8MC11	unsigned8	1	R	7	10 to 20	32	2.5
431–8MD11	unsigned8	1	R	7	10 to 20	32	3.6
433–8MA11	unsigned8	1	R	7	1 to 10	6	2.4
437–8EA12	unsigned8	1	R	7	40	50	0.45
Digital output modules 6ES5 ...:							
440–8MA11	unsigned8	1	R/W	7	< 1	15	3
440–8MA21	unsigned8	1	R/W	7	< 1	15	4.8
441–8MA11	unsigned8	1	R/W	7	< 1	14	3.5
450–8MB11	unsigned8	1	R/W	7	< 1	15	5
450–8MD11	unsigned8	1	R/W	7	< 1	14	3.5
451–8MA11	unsigned8	1	R/W	7	< 1	24	4
451–8MD11	unsigned8	1	R/W	7	< 1	25	3.5
451–8MR11	unsigned8	1	R/W	7	< 1	30	1.6
451–8MR12	unsigned8	1	R/W	7	< 1	30	1.6
452–8MR11	unsigned8	1	R/W	7	< 1	14	2
453–8MA11	unsigned8	1	R/W	7	< 1	20	1
457–8EA12	unsigned8	1	R/W	7	< 1	55	0.5

* Since this module has both inputs and outputs, an “input” and an “output” object are generated.

1 Meanings of abbreviations: R = Read (read access) und W = Write (write access).

2 Meanings of the abbreviations: 7 = Simple–Variable, 8 = Array. The FMS master can access an array element via a subindex.

3 In input modules, the delay is the time elapsing between a change of the input signal and the change of the I/O bus status. In output modules, the delay is the time elapsing between the change of the I/O bus signal and the resulting change of the output status.

Table 6-10 Coding the I/O Modules in an ET 200U(DP Standard/FMS)

Order No. of Module	Type	Length	Access Mode[1]	Object Code[2]	Delay (ms)	Current Consumption (mA)	Power Loss (W)
Analog input modules 6ES5 ...:							
464–8MA11[3]	1–channel:	2	R	1–ch.:	1–ch.:	70	0.7
464–8MA21[3]	unsigned16			7	60	100	0.7
464–8MB11[3]	2–channel:			2–ch.:	2–ch.:	70	0.7
464–8MC11[3]	2 × unsigned16			8	120	70	0.7
464–8MD11[3]	4–channel:			4–ch.:	4–ch.:	70	0.7
464–8ME11[3]	4 × unsigned16			8	240	70	0.7 to 1
464–8MF11[4]	1–channel: unsigned16	2	R	1–ch.: 7	1–ch.: 60	70	0.9
464–8MF21[4]	2–channel: 2 × unsigned16			2–ch.: 8	2–ch.: 120	100	0.9
466–8MC11	2 × unsigned16	2	R	8	120	100	0.9
467–8EE11[4]	1–channel: unsigned16 2–channel: 2 × unsigned16	2	R	1–ch.: 7 2–ch.: 8	1–ch.; 60 2–ch.: 120	320	0.7 to 3
Analog output modules 6ES5 ...:							
470–8MA11	2 × unsigned16	2	R/W	8	0.1		3.1
470–8MA12	2 × unsigned16	2	R/W	8	0.15		3.1
470–8MB11	2 × unsigned16	2	R/W	8	0.1		3.8
470–8MB12	2 × unsigned16	2	R/W	8	0.15		3.8
470–8MC11	2 × unsigned16	2	R/W	8	0.1		3.8
470–8MC12	2 × unsigned16	2	R/W	8	0.15		3.8
470–8MD11	2 × unsigned16	2	R/W	8	0.1		3.1
470–8MD12	2 × unsigned16	2	R/W	8	0.15		3.1
470–8MD21	2 × unsigned16	2	R/W	8			
477–8EC11	2 × unsigned16*	2*	R/W	8		350	3.2

* Since this module has both inputs and outputs, an “input” and an “output” object are generated.

1 Meanings of abbreviations: R = Read (read access) und W = Write (write access).

2 Meanings of the abbreviations: 7 = Simple–Variable, 8 = Array. The FMS master can access an array element via a subindex.

3 These analog modules can be operated with one channel, two channels or four channels.

4 These analog modules can be operated with either one channel or two channels.

Table 6-11 Coding the I/O Modules in an ET 200U(DP Standard/FMS)

Order No. of Module	Type	Length	Access Mode[1]	Object Code[2]	Delay (ms)	Current Consumption (mA)	Power Loss (W)
Input/output module:							
482–8MA11 –8MA12 –8MA13	unsigned16*	2*	R/W	7		50	4.5
Power supply module:							
935–8ME11[3]	2 × unsigned8	1	R	7			7.5
Simulator module:							
788–8MA11	unsigned8	1	R	7	< 0.2	30	0.3
	unsigned8	1	R/W				
Timer module:							
380–8MA11	unsigned8*	1*	R/W	7		10	
Counter modules:							
385–8MA11	unsigned8*	1*	R/W	7	0.18	20	2.5
385–8MB11	2 × unsigned16*	2*	R/W	8		70	1.9
Comparator module:							
461–8MA11	unsigned8	1	R	7	5	35	0.3
Closed–loop control modules:[4]							
262–8MA11 –8MA12	4 × unsigned16*	2*	R/W	8	100 to 200	20	
262–8MB11 –8MB12	4 × unsigned16*	2*	R/W	8	100 to 200	20	
Positioning modules:							
263–8MA11[3]	4 × unsigned16*	2*	R/W	8		120	4
266–8MA11	4 × unsigned16*	2*	R/W	8			
267–8MA11	2 × unsigned16*	2*	R/W	8		150	

* Since this module has both inputs and outputs, an “input” and an “output” object are generated.

1 Meanings of abbreviations: R = Read (read access) und W = Write (write access).

2 Meanings of the abbreviations: 7 = Simple–Variable, 8 = Array. The FMS master can access an array element via a subindex.

3 The module requires two slots.

4 The **minimum** access interval for these closed–loop control modules is 200 ms in an ET 200 system. FBs 61 and 62 may not be used.

Table 6-12 Coding the I/O Modules in an ET 200U(DP Standard/FMS)

Order No. of Module	Type	Length	Access Mode[1]	Object Code[2]	Delay (ms)	Current Consumption (mA)	Power Loss (W)
Electronic cam controller module IP 264:							
264–8MA11[3]	4 × unsigned16*	2*	R/W	8		120	4
High Speed Sub Control IP 265:[4]							
265–8MA01	4 × unsigned16*	2*	R/W	8			
CP 521 BASIC:							
521–8MB11	4 × unsigned16*	2*	R/W	8		180	1.6
CP 521 SI:							
521–8MA21	4 × unsigned16*	2*	R/W	8		140	1.2
330–8MA11 or no module	–	–	–	–	0		

* Since this module has both inputs and outputs, an “input” and an “output” object are generated.

1 Meanings of abbreviations: R = Read (read access) und W = Write (write access).

2 Meanings of the abbreviations: 7 = Simple–Variable, 8 = Array. The FMS master can access an array element via a subindex.

3 The module requires two slots.

4 The IP 265 can only be operated in Slow Mode.

Diagnostics Data

The “diagnostics data” object contains the diagnostics messages of the ET 200U(DP Standard/FMS). The FMS master can read the “diagnostics data” object.

The following tables show the structure of the “diagnostics data” object and the diagnostics messages, respectively.

Table 6-13 “Diagnostics Data” Object

INDEX:	110
OBJECT_CODE:	7 (Simple–Variable)
DATA_TYPE_INDEX:	10 (Octet string)
LENGTH:	13
LOCAL ADDRESS:	–
PASSWORD:	–
ACCESS_GROUPS:	–
ACCESS_RIGHTS:	R
NAME[16]:	Diagnostics data
EXTENSION_LENGTH:	0

The length of the diagnostics messages is 13 octets:

Table 6-14 Structure of the Diagnostics Messages of the ET 200U(DP Standard/FMS)

Octet	Diagnostics Message
1	Station status 1
2	Station status 2
3	Station status 3
4	DP master address
5	Manufacturer identification (I)
6	Manufacturer identification (II)
7	Header (station diagnostics)
8	Station diagnostics
9	Header (module diagnostics)
10	Module diagnostics (slots 0 to 7)
11	Module diagnostics (slots 8 to 15)
12	Module diagnostics (slots 16 to 23)
13	Module diagnostics (slots 24 to 31)

The following tables describe the meanings of the various diagnostics messages:

Note

If only FMS masters are on the bus, you can only evaluate **bit 3 of station status 1** of the “station status 1” and “station status 2” diagnostics messages.

If the ET 200U(DP Standard/FMS) is also accessed by a DP master, **all** diagnostics messages for station statuses 1 and 2 can be evaluated.

Station status 1:

Table 6-15 Meaning of Station Status 1

Bit	Diagnostics Message
0	1: ET 200U(DP Standard/FMS) cannot be accessed.
1	1: ET 200U(DP Standard/FMS) is not ready for interchange of data.
2	1: The data sent by the DP master to the ET 200U(DP Standard/FMS) do not comply with the configuration of the ET 200U(DP Standard/FMS).
3	1: Either station or module diagnostics selected.
4	1: Function is not supported.
5	0: Bit is always “0”.
6	1: Parameter error, e.g. illegal manufacturer identification, invalid DP parameter message.
7	1: ET 200U(DP Standard/FMS) has been parameterized by another DP master than the one currently accessing the ET 200U(DP Standard/FMS).

Station status 2:

Table 6-16 Meaning of Station Status 2

Bit	Diagnostics Message
0	1: ET 200U(DP Standard/FMS) must be parameterized again.
1	1: ET 200U(DP Standard/FMS) cannot continue to execute unless fault has been remedied.
2	1: Bit is always “1”.
3	1: Response monitoring has been activated.
4	1: ET 200U(DP Standard/FMS) is in “FREEZE” mode.
5	1: ET 200U(DP Standard/FMS) is in “SYNC” mode.
6	0: Bit is always “0”.
7	1: ET 200U(DP Standard/FMS) is deactivated, i.e. the ET 200U(DP Standard/FMS) is not cyclically accessed by the DP master.

Station status 3:

The “station status 3” diagnostics message is not available.

DP master address:

The station number of the DP master that has parameterized the ET 200U(DP Standard/FMS) is entered in the octet string “master address”. If only FMS masters are on the bus, the “master address” includes the value “FF_H”.

Manufacturer identification:

The manufacturer identification contains the number especially reserved for the ET 200U(DP Standard/FMS) by the PROFIBUS User Organization. The manufacturer identification takes two octets.

The manufacturer identification for the ET 200U(DP Standard/FMS) is “8009_H”. Manufacturer identification (I) contains “80_H” whereas manufacturer identification (II) has the value “09_H”.

“Station diagnostics” header:

The “station diagnostics” header specifies the scope and contents of the diagnostics information that follows.

Table 6-17 Meaning of the “Station Diagnostics” Header

Bit	Diagnostics Message
0	0: Length of the station diagnostics including header (station diagnostics) = 2 octets.
1	1:
2	0:
3	0:
4	0:
5	0:
6	0: Code for station diagnostics.
7	0:

Station diagnostics:

The station diagnostics message provides general information on the ET 200U(DP Standard/FMS):

Table 6-18 Information Content of Station Diagnostics

Bit	Diagnostics Message
0	1: ET 200U(DP Standard/FMS) executes in ”Slow Mode”.
1	1: Configuration data do not correspond to comodulemodulemodulenfiguration of the ET 200U(DP Standard/FMS).
2	0: Bit is always “0”.
3	1: I/O module removed or bus unit of ET 200U(DP Standard/FMS) defective. The slot of the I/O module or bus unit is specified in the module diagnostics.
4	1: No load voltage or output fault to ground (for I/O modules with diagnostics facility only)
5	1: Incorrect activation of an output (short–circuit to L+; for I/O modules with diagnostics facility only)
6	0: Bit is always “0”.
7	0: Bit is always “0”.

“Module diagnostics” header:

The “module diagnostics” header specifies the scope and contents of the diagnostics information that follows.

Table 6-19 Meaning of the “Module Diagnostics” Header

Bit	Diagnostics Message	
0	1:	Length of the module diagnostics including header (module diagnostics) = 5 octets.
1	0:	
2	1:	
3	0:	
4	0:	
5	0:	
6	1:	Code for module diagnostics.
7	0:	

Note

When a module announces diagnostics mode, up to 150 ms might elapse from the entry for station diagnostics to the following entry for module diagnostics.

Module diagnostics (slots 0 to 7):

The module diagnostics message names the faulty I/O module.

Table 6-20 Information Content of Module Diagnostics (Slots 0 to 7)

Bit	Diagnostics Message
0	Module in slot “0” faulty.
1	Module in slot “1” faulty.
2	Module in slot “2” faulty.
3	Module in slot “3” faulty.
4	Module in slot “4” faulty.
5	Module in slot “5” faulty.
6	Module in slot “6” faulty.
7	Module in slot “7” faulty.

Module diagnostics (slots 8 to 15):

Table 6-21 Information Content of Module Diagnostics (Slots 8 to 15)

Bit	Diagnostics Message
0	Module in slot “8” faulty.
1	Module in slot “9” faulty.
2	Module in slot “10” faulty.
3	Module in slot “11” faulty.
4	Module in slot “12” faulty.
5	Module in slot “13” faulty.
6	Module in slot “14” faulty.
7	Module in slot “15” faulty.

Module diagnostics (slots 16 to 23):

Table 6-22 Information Content of Module Diagnostics (Slots 16 to 23)

Bit	Diagnostics Message
0	Module in slot “16” faulty.
1	Module in slot “17” faulty.
2	Module in slot “18” faulty.
3	Module in slot “19” faulty.
4	Module in slot “20” faulty.
5	Module in slot “21” faulty.
6	Module in slot “22” faulty.
7	Module in slot “23” faulty.

Module diagnostics (Slots 24 to 31):

Table 6-23 Information Content of Module Diagnostics (Slots 24 to 31)

Bit	Diagnostics Message
0	Module in slot “24” faulty.
1	Module in slot “25” faulty.
2	Module in slot “26” faulty.
3	Module in slot “27” faulty.
4	Module in slot “28” faulty.
5	Module in slot “29” faulty.
6	Module in slot “30” faulty.
7	Module in slot “31” faulty.

Parameter Data

The “parameter data” object contains parameters specific to the ET 200U(DP Standard/FMS).

The “parameter data” object has the following structure:

Table 6-24 “Parameter Data” Object

INDEX:	120
OBJECT_CODE:	7 (Simple–Variable)
DATA_TYPE_INDEX:	10 (Octet–String)
LENGTH:	1
LOCAL ADDRESS:	–
PASSWORD:	–
ACCESS_GROUPS:	–
ACCESS_RIGHTS:	R/W
NAME[16]:	Parameter data
EXTENSION_LENGTH:	0

The following applies for the **ET 200U(FMS)**:

- The FMS master has write access to the “parameter data” object.

The following applies for the **ET 200U in a mixed configuration** and the **combi–slave**:

- The DP master has write access to the “parameter data” object, the FMS master may only read this object.
- In the event of a failure of the DP master, the FMS master has write access to the “parameter data” object.

Meanings of the parameter data:

Table 6-25 Meanings of the Parameter Data

Bit	Parameter Data
0	**Result when removing or inserting modules or if bus unit is defective** 0: In the case of a fault, all outputs are set to “0”. The ET 200U(DP Standard/FMS) does not enter the STOP mode. 1: The ET 200U(DP Standard/FMS) discontinues “shifting” on the I/O bus. It reads again all the modules plugged in and resumes data interchange with the current values. The output states are retained while “shifting” is discontinued!
1	**Evaluating the diagnostics data of modules with diagnostics capability** 0: Diagnostics data of modules with diagnostics capability are not evaluated. 1: If modules with diagnostics capability are inserted, the diagnostics data are evaluated.
2	**Mode of the IM 318–C** 0: The IM 318–C is operated as ET 200U(DP Standard), as ET 200U(FMS) or as ET 200U(DP Standard) in a mixed configuration. 1: The IM 318–C is operated as a combi–slave.
3	**I/O bus speed** 0: The I/O bus is **not** operated in “Slow Mode”. 1: The I/O bus is operated in “Slow Mode”.
	Bits 4 to 7 cannot be assigned.

DP Inputs

The “DP inputs” object can be used by the FMS master to read all inputs of an ET 200U(DP Standard/FMS) assigned to a DP master.

Table 6-26 “DP Inputs” Object

INDEX:	130
OBJECT_CODE:	7 (Simple–Variable)
DATA_TYPE_INDEX:	10 (Octet–String)
LENGTH:	Depending on configuration of ET 200U(DP Standard/FMS)
LOCAL ADDRESS:	–
PASSWORD:	–
ACCESS_GROUPS:	–
ACCESS_RIGHTS:	R
NAME[16]:	DP Input
EXTENSION_LENGTH:	0

FMS Inputs

The “FMS inputs” object can be used by the FMS master to read all inputs of an ET 200U(DP Standard/FMS) assigned to an FMS master.

The “FMS inputs” object has the following structure:

Table 6-27 “FMS Inputs” Object

INDEX:	140
OBJECT_CODE:	7 (Simple–Variable)
DATA_TYPE_INDEX:	10 (Octet–String)
LENGTH:	Depending on configuration of ET 200U(DP Standard/FMS)
LOCAL ADDRESS:	–
PASSWORD:	–
ACCESS_GROUPS:	–
ACCESS_RIGHTS:	R
NAME[16]:	FMS Input
EXTENSION_LENGTH:	0

DP Outputs

The “DP outputs” object can be used by the FMS master to read all outputs of an ET 200U(DP Standard/FMS) assigned to a DP master.

Table 6-28 “DP Outputs” Object

INDEX:	150
OBJECT_CODE:	7 (Simple–Variable)
DATA_TYPE_INDEX:	10 (Octet–String)
LENGTH:	Depending on configuration of ET 200U(DP Standard/FMS)
LOCAL ADDRESS:	–
PASSWORD:	–
ACCESS_GROUPS:	–
ACCESS_RIGHTS:	R
NAME[16]:	DP Output
EXTENSION_LENGTH:	0

FMS Outputs

The “FMS outputs” object can be used by the FMS master to read or write all outputs of an ET 200U(DP Standard/FMS) assigned to the FMS master.

The “FMS outputs” object has the following structure:

Table 6-29 “FMS Outputs” Object

INDEX:	160
OBJECT_CODE:	7 (Simple–Variable)
DATA_TYPE_INDEX:	10 (Octet–String)
LENGTH:	Depending on configuration of ET 200U(DP Standard/FMS)
LOCAL ADDRESS:	–
PASSWORD:	–
ACCESS_GROUPS:	–
ACCESS_RIGHTS:	R/W
NAME[16]:	FMS Output
EXTENSION_LENGTH:	0

Diagnostics Event (with “Event–Notification”)

If

- events are enabled using the FMS service “Alter–Event–Condition–Monitoring”,
- an open link (MSZY_SI or MSAZ_SI) has been parameterized

  and

- if there is any change in a diagnostics message,

the ET 200U(DP Standard/FMS) uses the “Event–Notification” to transmit a low–priority message together with the diagnostics data to the FMS master.

The diagnostics message thus transmitted

- is sent only once and
- need not be acknowledged with the FMS service “Acknowledge–Event–Notification”.

The “diagnostics event” object has the following structure.

Table 6-30 “Diagnostics Event” Object

INDEX:	170
OBJECT_CODE:	4 (Event)
INDEX_EVENT_DATA:	120
LENGTH:	–
PASSWORD:	–
ACCESS_GROUP:	–
ACCESS_RIGHTS:	Wa/Da
ENABLED:	false (no event is issued during startup)
NAME[16]:	Diagnost. Event
EXTENSION_LENGTH:	0

6.3.3 List of Communication Links (KBL)

The list of communication links (KBL) contains all the associations between the ET 200U(DP Standard/FMS) and the FMS master. The communication links are relevant for configuring the FMS master.

The list of communication links is based on the definitions in the sensors/actuators profile.

The list of communication links is followed by the definitions of the terms employed.

Table 6-31 Master–Slave, Cyclic, Read

KR	Type	ATTR	Local LSAP	RSAP	RADR	SCC	RCC	SAC	RAC	ACI, CCI
2	MSZY	O	20	All	All	0	0	0	0	3000

Max. PDU Size				Features Supported	FMS Services Supported
Send HiPrio	Send LoPrio	Rec. HiPrio	Rec. LoPrio		
0	241	0	241	00 00 00 00 20 00	Read.ind

Table 6-32 Master–Slave, Cyclic, Write

KR	Type	ATTR	Local LSAP	RSAP	RADR	SCC	RCC	SAC	RAC	ACI, CCI
3	MSZY	O	21	All	All	0	0	0	0	3000

Max. PDU Size				Features Supported	FMS Services Supported
Send HiPrio	Send LoPrio	Rec. HiPrio	Rec. LoPrio		
0	241	0	241	00 00 00 00 10 00	Write.ind

Table 6-33 Master–Slave, Cyclic, with Slave Initiation, Read

KR	Type	ATTR	Local LSAP	RSAP	RADR	SCC	RCC	SAC	RAC	ACI, CCI
4	MSZY_SI	O	22	All	All	0	0	1	0	3000

Max. PDU Size				Features Supported	FMS Services Supported
Send HiPrio	Send LoPrio	Rec. HiPrio	Rec. LoPrio		
241	241	0	241	00 00 10 00 20 00	Read.ind Event–Notification.req

Table 6-34 Master–Slave, Cyclic, with Slave Initiation, Write

KR	Type	ATTR	Local LSAP	RSAP	RADR	SCC	RCC	SAC	RAC	ACI, CCI
5	MSZY_SI	O	23	All	All	0	0	1	0	3000

Max. PDU Size				Features Supported	FMS Services Supported
Send HiPrio	Send LoPrio	Rec. HiPrio	Rec. LoPrio		
241	241	0	241	00 00 10 00 10 00	Write.ind Event–Notification.req

Table 6-35 Master–Slave, Acyclic, with Slave Initiation

KR	Type	ATTR	Local LSAP	RSAP	RADR	SCC	RCC	SAC	RAC	ACI, CCI
6	MSAZ_SI	O	24	All	All	0	1	1	0	3000

Max. PDU Size				Features Supported	FMS Services Supported
Send HiPrio	Send LoPrio	Rec. HiPrio	Rec. LoPrio		
241	241	0	241	00 00 10 80 33 06	Read.ind Write.ind Phys–Read.ind* Phys–Write.ind* Get–OV–long.ind Event–Notification.req Acknowledge–Event–Notification.ind Alter–Event–Condition–Monitoring.ind

Table 6-36 Master–Slave, Acyclic

KR	Type	ATTR	Local LSAP	RSAP	RADR	SCC	RCC	SAC	RAC	ACI, CCI
7	MSAZ	O	25	All	All	0	1	0	0	3000

Max. PDU Size				Features Supported	FMS Services Supported
Send HiPrio	Send LoPrio	Rec. HiPrio	Rec. LoPrio		
0	241	0	241	00 00 00 80 33 00	Read.ind Write.ind Phys–Read.ind* Phys–Write.ind* Get–OV–long.ind

*: Although this service is supported by the ET 200U(DP Standard/FMS), it cannot be used here.

Table 6-37 Master–Slave, Acyclic, with Event Acknowledgement for Cyclic Links

KR	Type	ATTR	Local LSAP	RSAP	RADR	SCC	RCC	SAC	RAC	ACI, CCI
8	MSAZ	O	26	All	All	0	1	0	0	3000

Max. PDU Size				Features Supported	FMS Services Supported
Send HiPrio	Send LoPrio	Rec. HiPrio	Rec. LoPrio		
0	241	0	241	00 00 00 80 33 06	Read.ind Write.ind Phys–Read.ind* Phys–Write.ind* Get–OV–long.ind Acknowledge–Event–Notification.ind Alter–Event–Condition–Monitoring.ind

*: Although this service is supported by the ET 200U(DP Standard/FMS), it cannot be used here.

KR

The communication references (KR) designate the associations described in the list of communication links.

The communication references are numbered from 2 to 8 in the list of communication links. Communication reference 0 contains general definitions.

Type

The “type” describes the communication link between the ET 200U(DP Standard/FMS) and the FMS master. There are six different types of link:

Table 6-38 Types of Link of the ET 200U(DP Standard/FMS)

Abbreviation	Meaning
MSAZ	Master–slave link for acyclic data communications without slave initiation
MSAZ_SI	Master–slave link for acyclic data communications with slave initiation
MSZY	Master–slave link for cyclic data communications without slave initiation
MSZY_SI	Master–slave link for cyclic data communications with slave initiation

ATTR

The link attribute (ATTR) states whether a link is open (O) or defined (D).

In open links, layer–2 addresses are not entered until the link is being established.

Local LSAP

The Local Link–Service–Access–Point (Local LSAP) is the service access point of the ET 200U(DP Standard/FMS) at which the message crosses the interface between layer 2 and layer 7.

RSAP

The Remote–Service–Access–Point (RSAP) is the service access point of the FMS master at which the message crosses the interface between layer 2 and layer 7.

RADR

The Remote Address (RADR) is the station number of the FMS master.

SCC

Send Confirmed Request Counter

RCC

Receive Confirmed Request Counter

SAC

Send Acknowledged Request Counter

RAC

Receive Acknowledged Request Counter

ACI, CCI	Acyclic Control Interval, Cyclic Control Interval An interval of 30 s in which the ET 200U(DP Standard/FMS) checks whether a link still exists.
Max. PDU Size	Specifies the maximum length of a Protocol Data Unit.
Features Supported	Specifies the FMS services supported by the ET 200U(DP Standard/FMS) in a link.

6.4 Using LEDs to Diagnose Problems

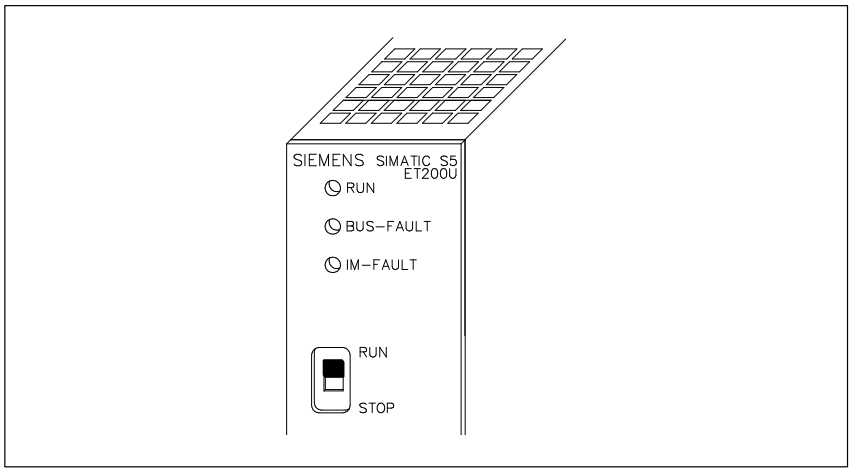

Figure 6-3 Fault LEDs on the ET 200U Interface Module

The following table explains the meanings of the fault LEDs:

Table 6-39 LED Fault Messages from ET 200U

LED	Optical Signal	Explanation
RUN	Lit	Normal operation (load voltage supply available)
BUS–FAULT	Lit	• No FMS link established **The following three fault messages are valid only if a DP master is also connected to the bus:** • Response time has run out and the ET 200U was not addressed. • During system start–up or power up: ET 200U not yet parameterized. • No connection between bus and ET 200U.
IM–FAULT	Lit or flashing	Fault in the I/O bus (e.g. bus unit defective)
BUS–FAULT und IM–FAULT	Lit	Hardware fault in the ET 200U interface module
BUS–FAULT und IM–FAULT	Flashing	The configured station address is not within the permitted range (1 to 125)

6.5 Example of Programming a Link between an ET 200U(FMS) and a CP 5431 FMS

The following example is intended as an introduction into programming a link between an ET 200U(FMS) and a CP 5431 FMS with SINEC NCM using a typical configuration.

The CP 5431 supports the “MSZY” and “MSAZ” links.

The configuration of an ET 200U(FMS) is shown below:

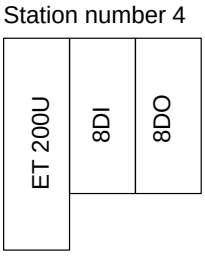

Two types of link can be configured:

- MSZY (Cyclic reading of inputs, cyclic setting of outputs)

  and

- MSAZ (Configuring the FMS service “Identify”).

6.5.1 Programming a Cyclic Link (MSZY)

The example describes the cyclic reading of inputs and cyclic setting of the outputs. The 8DI input module is addressed via peripheral byte PB 100 in the input area, the 8DO output module is addressed via peripheral byte PB 100 in the output area.

Prerequisite: You have started SINEC NCM and are now in the selection screen.

You have completed the “Init–Edit start screen” and the “Edit – CP Init basic initialisation” screens.

1. Change to the “Input/output (I/O) areas” screen via “Edit – I/O – I/O areas”:

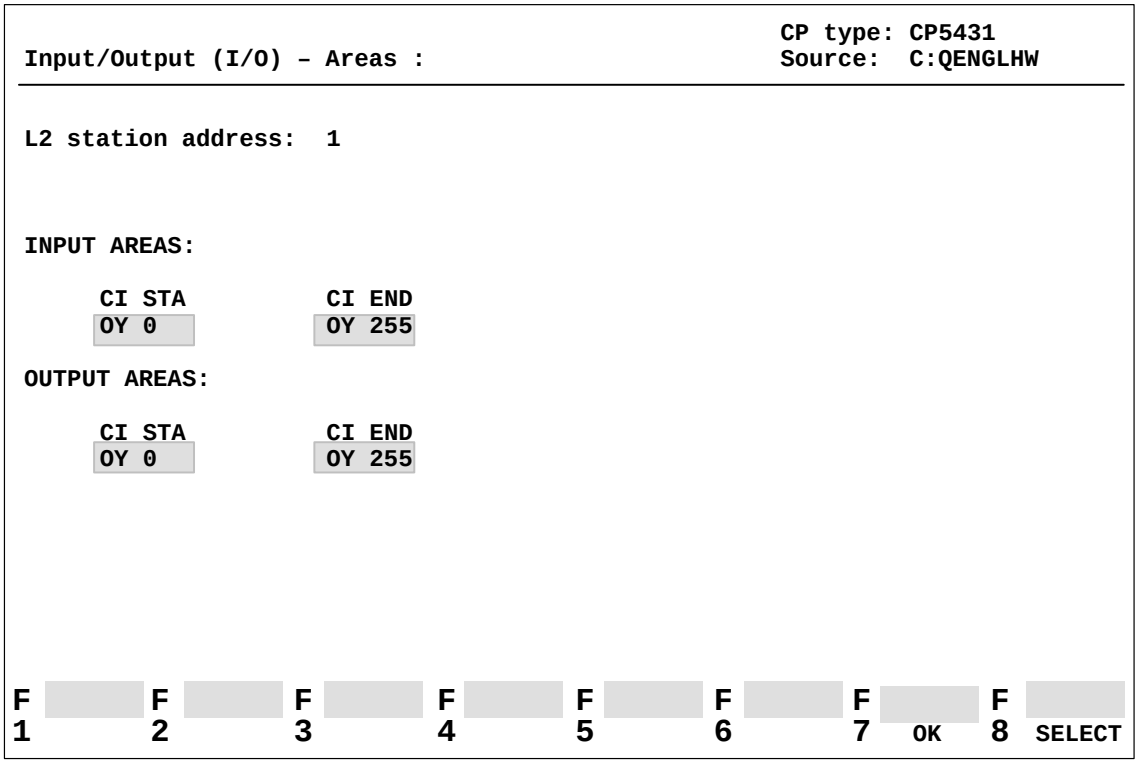

Figure 6-4 “Input/Output (I/O) Areas” Screen

2. Enter the areas for the “8DI” and the “8DO” and confirm your input with <F7> (OK).

   Result: This takes you to the selection screen.

3. Select “Edit – I/O – CI editor” to call up the “CI editor” screen and then enter the relevant values for the “8DI” and the “8DO”:

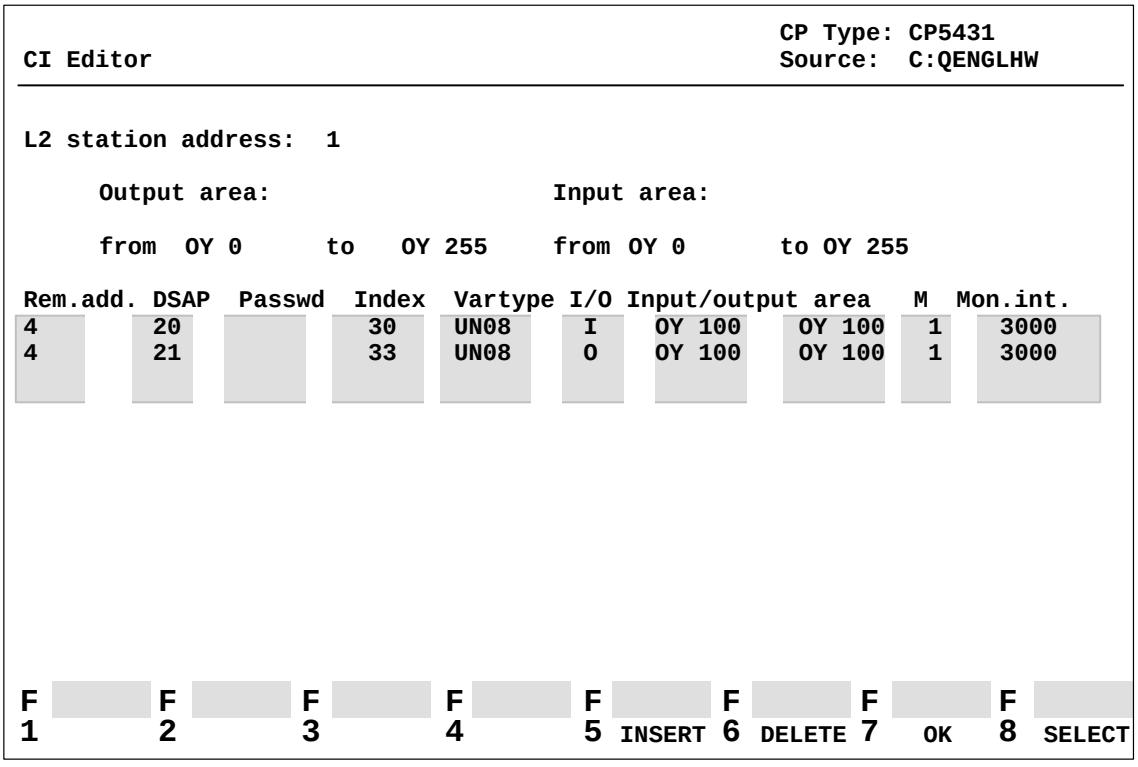

Figure 6-5 “CI Editor” Screen

Result: You have now configured the I/O modules for cyclic data communications.

You can now access the I/O modules via load/transfer operations, such as “L IB 100” or “T QB 100”, in the STEP 5 program.

Prerequisite: Use job number 210 to call up the “SEND” FB and job number 211 to call up the “RECEIVE” FB.

6.5.2 Programming an Acyclic Link (MSAZ)

The example describes the configuration of the FMS service “Identify” in an acyclic link.

Prerequisite: You have started SINEC NCM and are now in the selection screen.

You have completed the “Init – Edit start screen” and the “Edit – CP Init basic initialisation” screens.

1. Enter the relevant values in the “CP link programming” screen in order to configure an acyclic link.

   Enter “26” in the “Remote LSAP” input field for an acyclic link (→ Table 6-37, Section 6.3.3); enter the station number of the ET 200U(FMS) in the “Remote L2 address” input field.

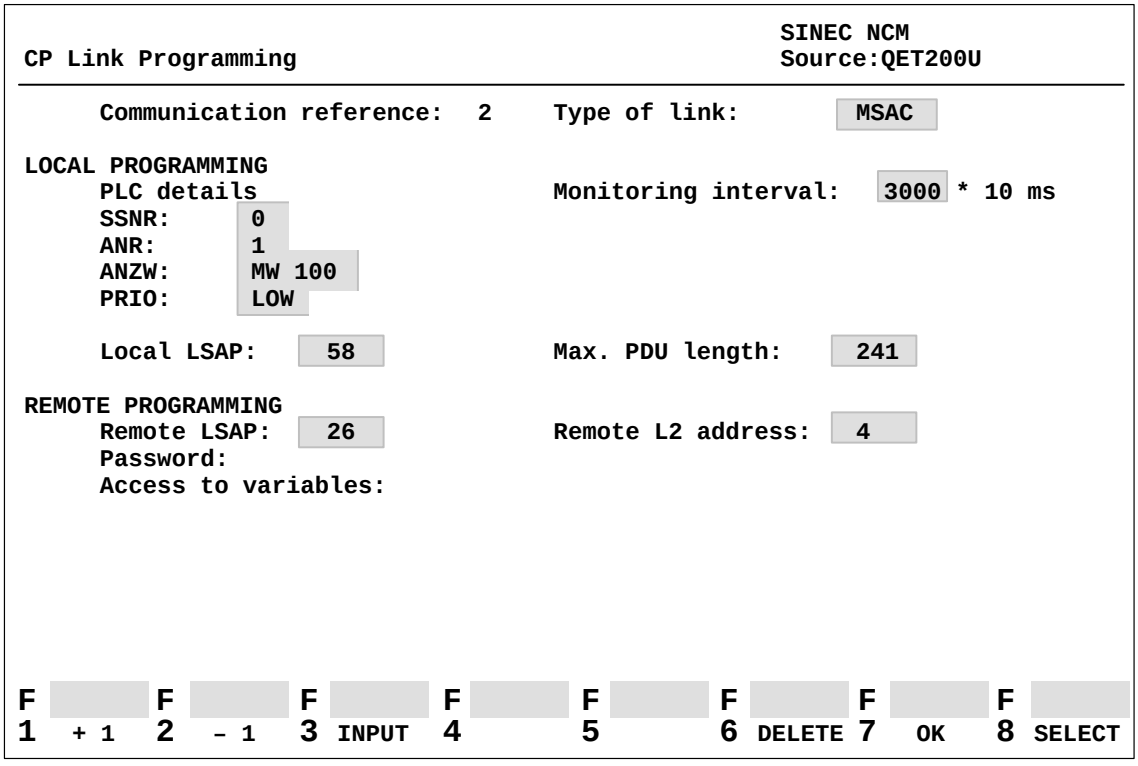

Figure 6-6 “CP Link Programming” Screen

2. Confirm your inputs by means of <F7> (OK).

   Result: You have now completed the configuring procedure.

3. Change to the “Request editor initialisation” screen via “Tools – Request–Editor – Init”. Then enter the name of the program file and the data block for the request buffer:

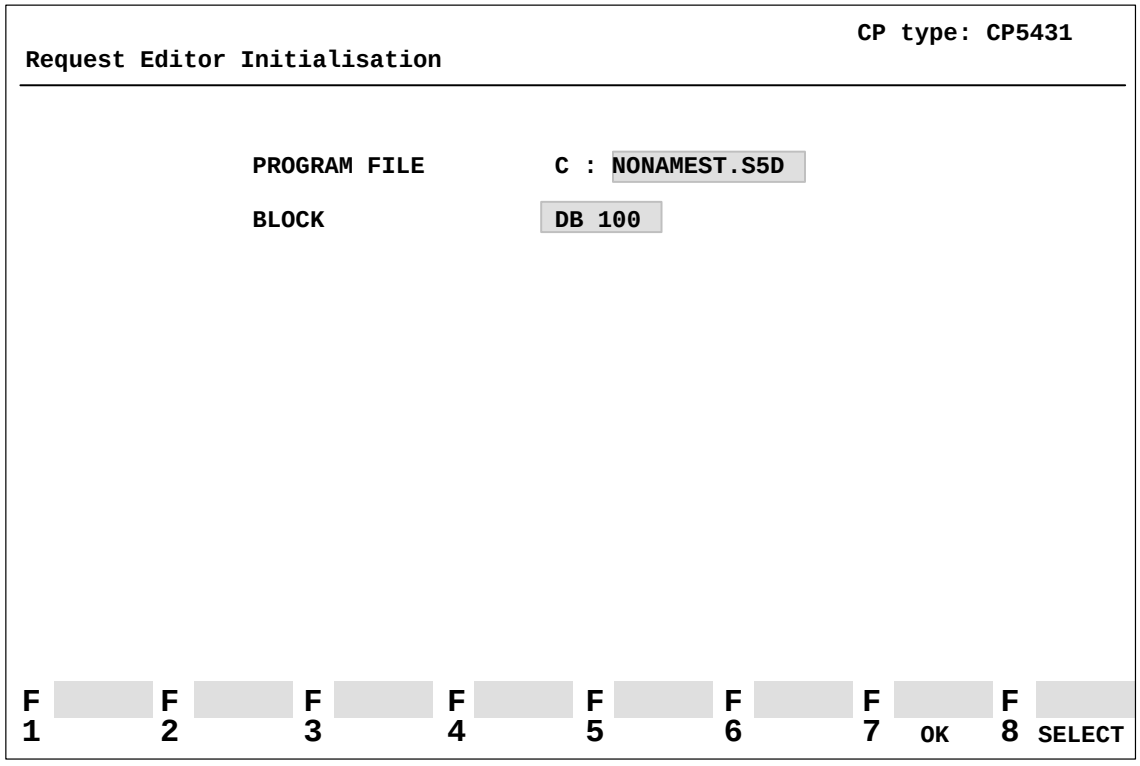

Figure 6-7 “Request Editor Initialisation “ Screen

4. Confirm the above inputs and using <F7> (OK).

5. Change to the “Request editor” screen via “Tools – Create request buffer”.
6. Activate <F3> (NEW) in order to be able to select the FMS service “Identify”:
7. Position the cursor to “IDENTIFY VFD:” and activate <F7> (OK).

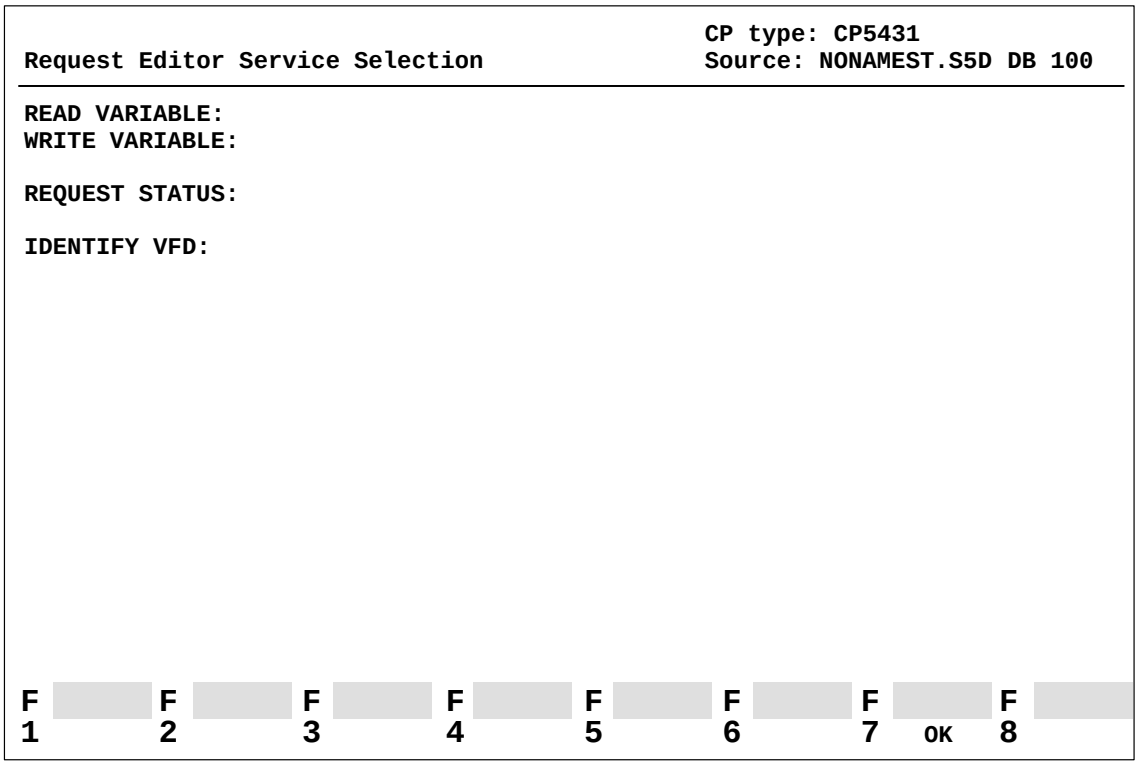

Figure 6-8 “Request Editor Service Selection” Screen

Result: This takes you to the “Request Editor” screen with the “IDENTIFY” service.

8. Enter, for instance, “DB 10” from data word “1” as S5 destination address and “–1” as default length.

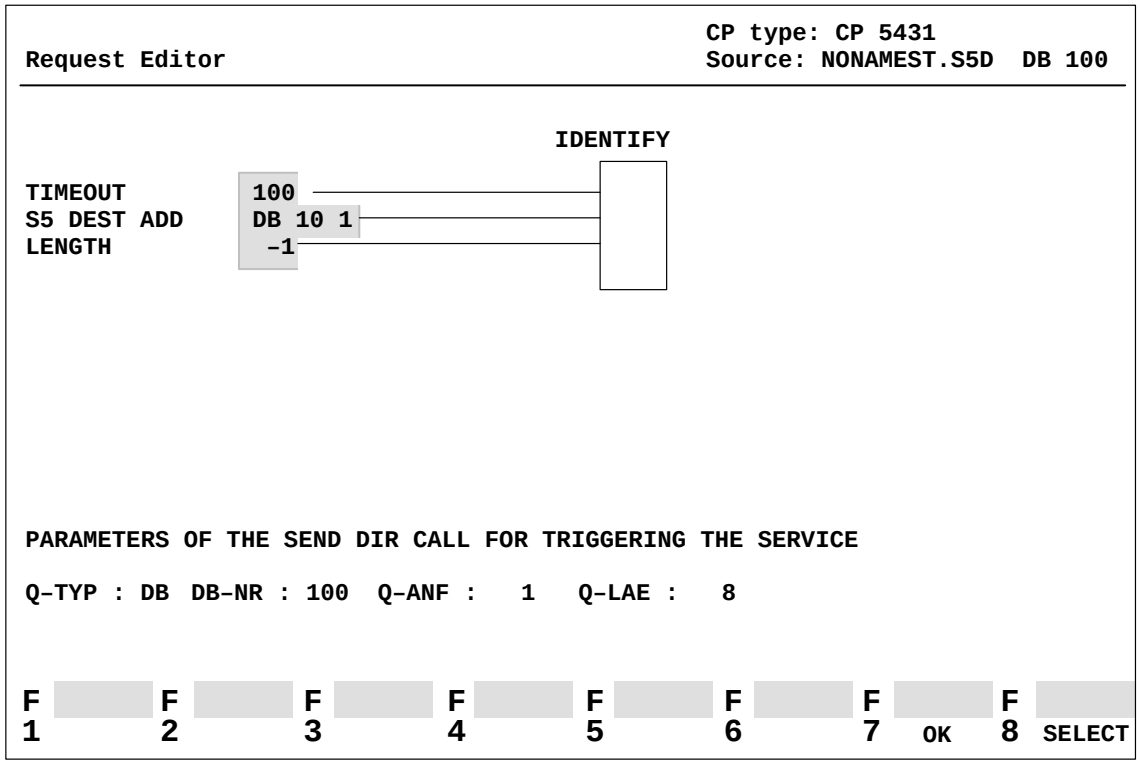

Figure 6-9 “Request Editor” Screen

9. Confirm your inputs by means of <F7> (OK).

   Result: You can now use the “Identify” service in the STEP 5 program.

   For requirements of the STEP 5 program, such as initiating the FMS service, making entries in the FB SEND data handling block, etc. refer to the CP 5431 FMS Manual.

Analog Value Processing

7

7.1	Analog Input Modules	7-2
7.2	Connecting Current and Voltage Sensors to Analog Input Modules	7-3
	Voltage Measurement with Isolated / Non–Isolated Thermocouples	7-3
	Connection of Thermocouples with Compensa–ting Box to Module 464–8MA11/8MA21	7-5
	Two–Wire Connection of Voltage Sensors	7-5
	Two–Wire Connection of Current Sensors	7-6
	Connection of Two–Wire Transducers	7-7
	Connection of Four–Wire Transducers	7-8
	Wiring of the Terminal Block	7-8
	More than Two Four–Wire Transducer Connections	7-8
	No Wire Break Detection with 6ES5 464–8ME11	7-8
	Connection of Resistance Thermometers	7-9
7.3	Start–Up of Analog Input Modules	7-11
7.4	Analog Value Representation of Analog Input Modules	7-16
7.5	Analog Output Modules	7-25
	Connection of Loads to Analog Output Modules	7-25
	Analog Value Representation of Analog Output Modules	7-27

Figures

7-1	Voltage Measuring with Isolated Thermocouples (6ES5 464–8MA11/8MA21)	7-4
7-2	Voltage Measuring with Non–Isolated Thermocouples (6ES5 464–8MA11/8MA21)	7-4
7-3	Two–Wire Connection of Voltage Sensors (6ES5 464–8MB11, 464–8MC11, 466–8MC11)	7-5
7-4	Two–Wire Connection of Current Sensors (6ES5 464–8MD11)	7-6
7-5	Connection of Two–Wire Transducers (6ES5 464–8ME11)	7-7
7-6	Connection of Four–Wire Transducers (6ES5 464–8ME11)	7-8
7-7	Wiring Method for PT 100 (6ES5 464–8MF11/8MF21)	7-9
7-8	Wiring Possibilities for Input Modules (6ES5 464–8MF11)	7-10
7-9	Load Connection via a Four–Wire Circuit (6ES5 470–8MA11, 6ES5 470–8MD11)	7-26
7-10	Connection via a Two–Wire Circuit (6ES5 470–8MB11, 6ES5 470–8MC11)	7-27

Tables

7-1 Settings for the Operating Mode Switch for Analog Input Modules 464–8 to 11 7-11
7-2 Settings for the Operating Mode Switch for Analog Input Module 464–8MA21 7-12
7-3 Settings for the Operating Mode Switch for Analog Input Module 464–8MF21 7-15
7-4 Representation of an Analog Input Value as Bit Pattern 7-16
7-5 Analog Input Modules 464–8MA11, –8MF11, –8MB11 (Bipolar Fixed–Point Number) 7-17
7-6 Analog Input Modules 464–8MC11, –8MD11 (Bipolar Fixed–Point Number) 7-18
7-7 Analog Input Module 464–8ME11, 4 4 to 20 mA (Absolute Value) 7-18
7-8 Analog Input Module 464–8MF11, 2 PT 100 (Unipolar) Analog Input Module 464–8MF21, 2 PT 100 “No Linearization” (Unipolar) 7-19
7-9 Analog Input Module 464–8MF21, 2 PT 100 “with Linearization” (Bipolar), to DIN IEC 751 7-19
7-10 Analog Input Module 464–8MA21, 4 ”50 mV with Linearization and with Temperature Compensation (Bipolar); Thermoelement Type K (Nickel–Chromium/Nickel–Aluminium, according to IEC 584) 7-20
7-11 Analog Input Module 464–8MA21, 4 ¿ ”50 mV with Linearization and with Temperature Compensation (Bipolar); Thermoelement Type J (Iron/Copper–Nickel (Konstantan) according to IEC 584) 7-21
7-12 Analog Input Module 464–8MA21, 4 ¿ ”50 mV with Linearization and with Temperature Compensation (Bipolar); Thermoelement Type L (Iron/Copper–Nickel (Konstantan), according to 43710) 7-22
7-13 Analog Input Module 466–8MC11, 4 ¿ 0 to 10 V 7-23
7-14 Representation of an Analog Output Value as a Bit Pattern 7-27
7-15 Output Voltages and Currents for Analog Output Modules (Fixed–Point Number Bipolar) 7-28
7-16 Output Voltages and Currents for Analog Output Modules (Unipolar) 7-28

7 Analog Value Processing

The “Analog Value Processing” chapter contains wiring instructions for the analog modules and notes on processing analog values.

7.1 Analog Input Modules

Analog input modules convert analog process signals to digital values that the CPU can process (via the process image input table, PII).

In the following sections, you will find information about the

- operating principle,
- wiring methods,
- start–up and
- programming of analog input modules.

7.2 Connecting Current and Voltage Sensors to Analog Input Modules

Observe the following rules to connect current and voltage sensors to analog input modules:

- When you have multi–channel operations, assign the channels in ascending order. This shortens the data cycle.
- Use terminals 1 and 2
  - for the connection of a compensating box (464–8MA11) or
  - for the supply of two–wire transducers (464–8ME11).

  Terminals 1 and 2 cannot be used with the remaining analog input modules.
- Short–circuit the terminals of unused inputs to increase interference immunity.
- The potential difference between the common references of the inputs must not exceed 1 V. To prevent this, set the reference potentials of the sensors to a common reference potential.

Voltage Measurement with Isolated / Non–Isolated Thermocouples

Module **464–8MA11/8MA21** is recommended for voltage measurement with thermocouples. With **floating** sensors (e.g., isolated thermocouples), the permissible potential difference V_{CM} between the minus terminals of the inputs and the potential of the standard mounting rail must not be exceeded. To avoid this, the negative potential of the sensor must be connected to the central grounding point (see Figure 7-1).

Jumper terminals 1 and 2 together if you do not use compensation boxes.

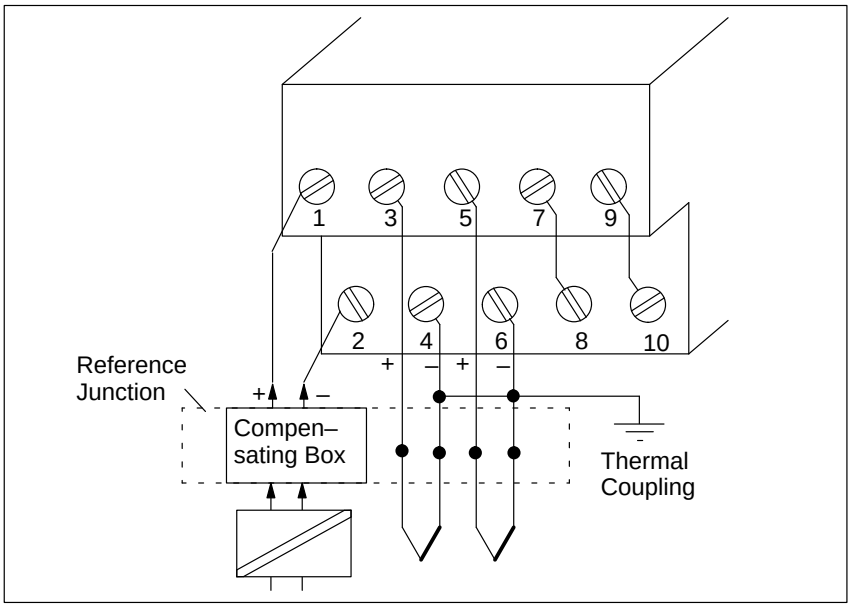

Figure 7-1 Voltage Measuring with Isolated Thermocouples (6ES5 464–8MA11/8MA21)

With **non–floating** sensors (e.g., non–isolated thermocouples) the permissible potential difference V_{CM} must not be exceeded (see maximum values of the individual modules).

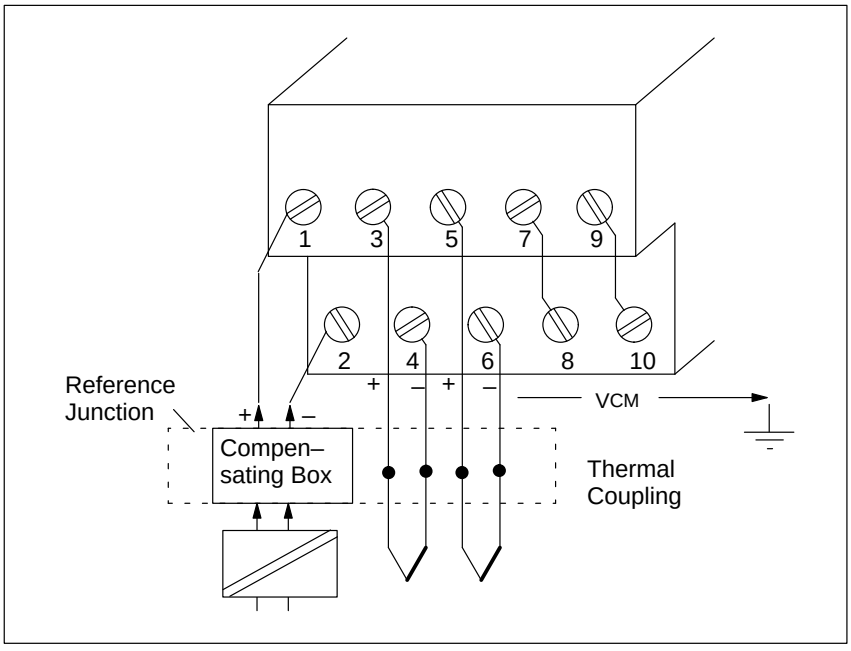

Figure 7-2 Voltage Measuring with Non–Isolated Thermocouples (6ES5 464–8MA11/8MA21)

Connection of Thermocouples with Compensa–ting Box to Module 464–8MA11/8MA21

You can use a compensation box to compensate for the influence of the temperature on the reference junction (e.g. terminal box).

Observe the following rules:

- The compensation box must have a floating supply.
- The power supply must have a grounded shielding winding.
- The compensation box must be connected to terminals 1 and 2 of the terminal block.

Two–Wire Connection of Voltage Sensors

You can use the following three modules to connect voltage sensors:

- Analog Input Module **464–8MB11** for voltages of ± 1 V
- Analog Input Module **464–8MC11** for voltages of ± 10 V

  and

- Analog Input Module **466–8MC11** for voltages from 0 to 10 V

Figure 7-3 shows the two–wire connection of voltage sensors.

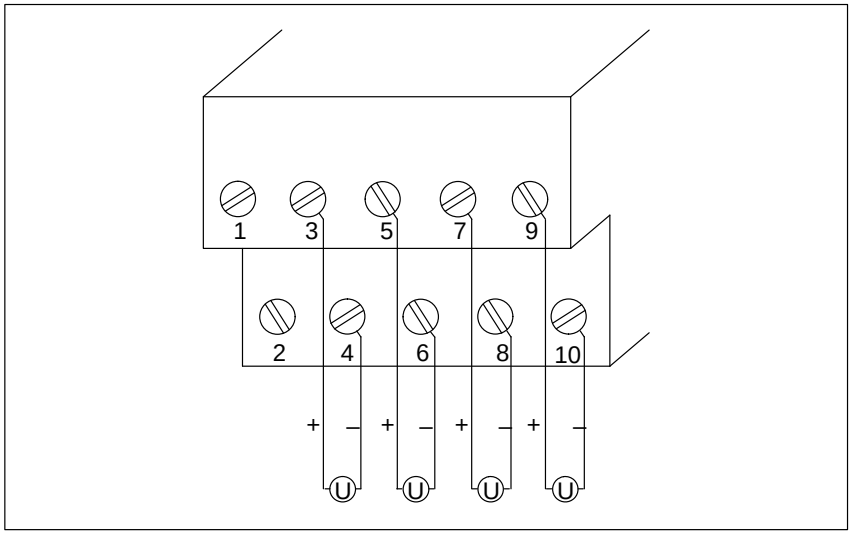

Figure 7-3 Two–Wire Connection of Voltage Sensors (6ES5 464–8MB11, 464–8MC11, 466–8MC11)

Two–Wire Connection of Current Sensors

You can use module **464–8MD11** for the two–wire connection of current sensors. Figure 7-4 shows the two–wire connection of current sensors.

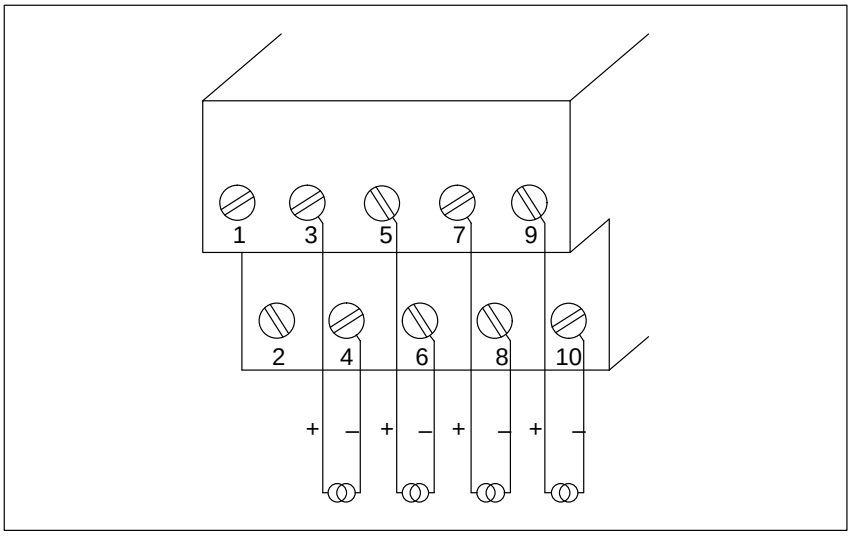

Figure 7-4 Two–Wire Connection of Current Sensors (6ES5 464–8MD11)

Connection of Two–Wire Transducers

Use the 24 V inputs 1 and 2 of analog input module **464–8ME11** to supply two–wire transducers. A two–wire transducer converts the supplied voltage to a current of 4 mA to 20 mA.

For wiring connections, see Figure 7-5.

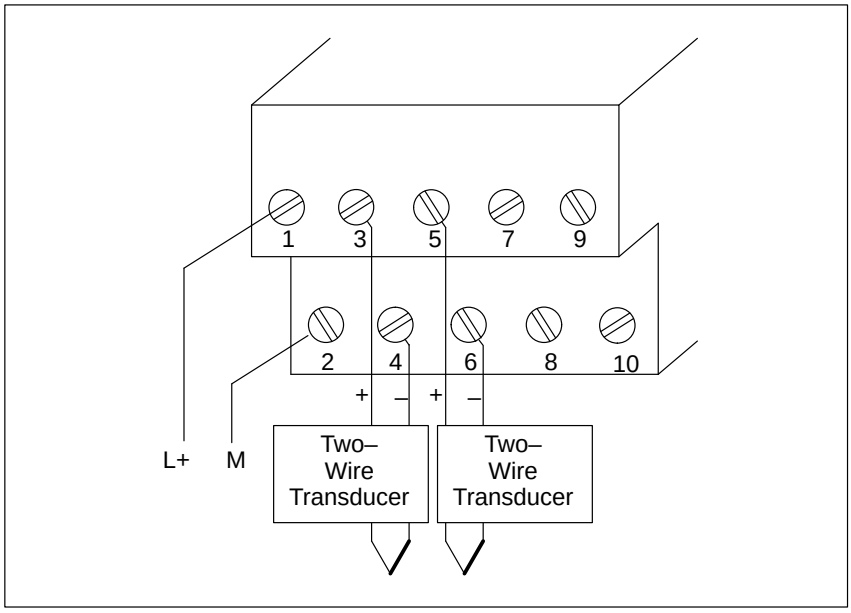

Figure 7-5 Connection of Two–Wire Transducers (6ES5 464–8ME11)

Connection of Four–Wire Transducers

If you use a four–wire transducer, connect it as follows (Figure 7-6):

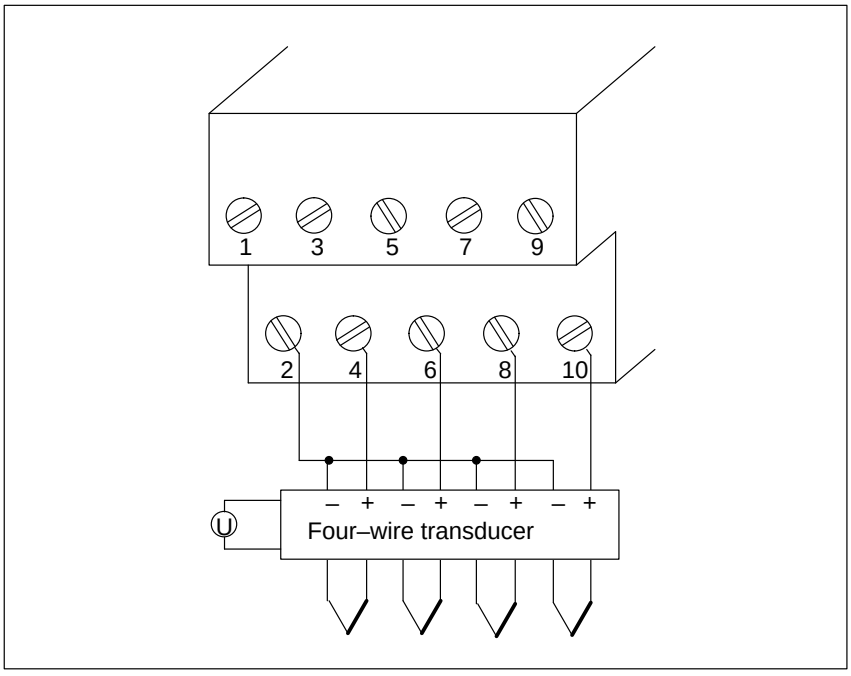

Figure 7-6 Connection of Four–Wire Transducers (6ES5 464–8ME11)

Wiring of the Terminal Block

Note that four–wire transducers require their own power supply. Connect the "+" pole of the four–wire transducer to the corresponding "–" pole of the terminal block (a connection technique that is the opposite of the two–wire transducer).

Connect all negative terminals of the four–wire transducer to terminal two of the terminal block.

More than Two Four–Wire Transducer Connections

If four–wire transducers with more than 2 "–" terminals are connected:

- Connect the "–" terminals to the same potential (terminal strip or terminal block) and
- Connect the terminal strip with terminal 2 of the terminal block.

Reason for this measure: Only 2 wires may be connected per terminal of the terminal block.

No Wire Break Detection with 6ES5 464–8ME11

Inputs 4, 6, 8 and 10 of analog module 464–8ME11 are connected internally via shunt resistors. Because of the internal shunt resistors, broken wire signalling is not possible.

Connection of Resistance Thermometers

You can use analog input module **464–8MF11/8MF21** to connect resistance thermometers (e.g. PT 100).

The resistance of the PT 100 is measured in a four–wire circuit. A constant current is supplied to the resistance thermometer via terminals 7 and 8 as well as via terminals 9 and 10, so that voltage drops in these constant current circuits do not affect the measurement results. The measuring inputs have a high resistance so that only a negligible current loss develops in the measuring circuits.

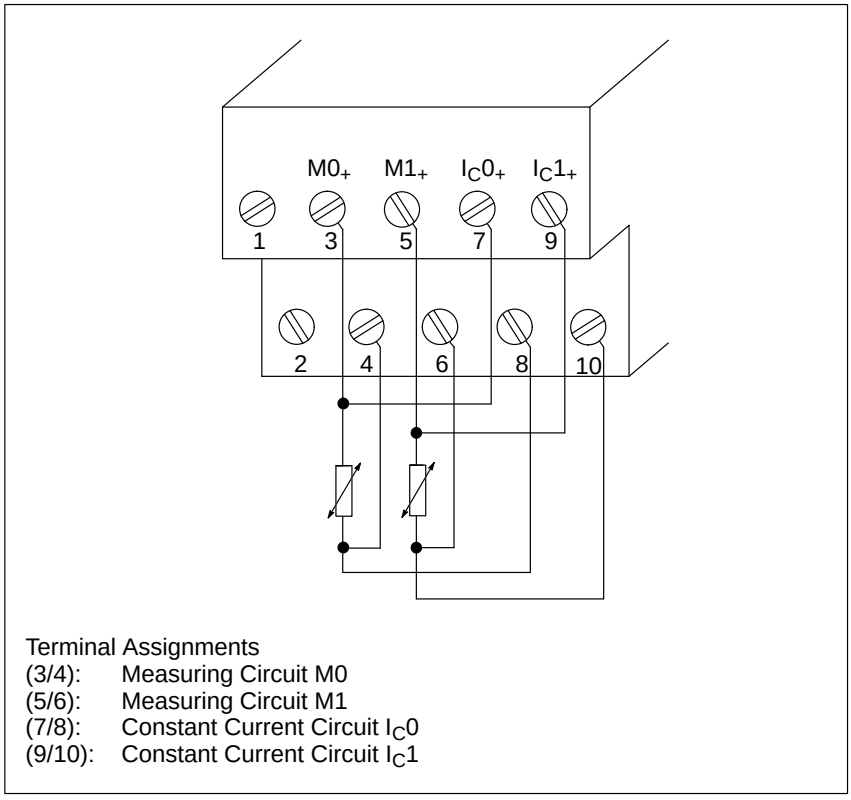

Terminal Assignments
(3/4): Measuring Circuit M0
(5/6): Measuring Circuit M1
(7/8): Constant Current Circuit I_C0
(9/10): Constant Current Circuit I_C1

Figure 7-7 Wiring Method for PT 100 (6ES5 464–8MF11/8MF21)

If you use only one channel for PT 100 measurement (e.g., channel 0), you can use the other channel for voltage measurement (± 500 mV). In this case, use terminals M+/M– for the signal connection and short circuit terminals I_{C+} and $I_{C–}$.

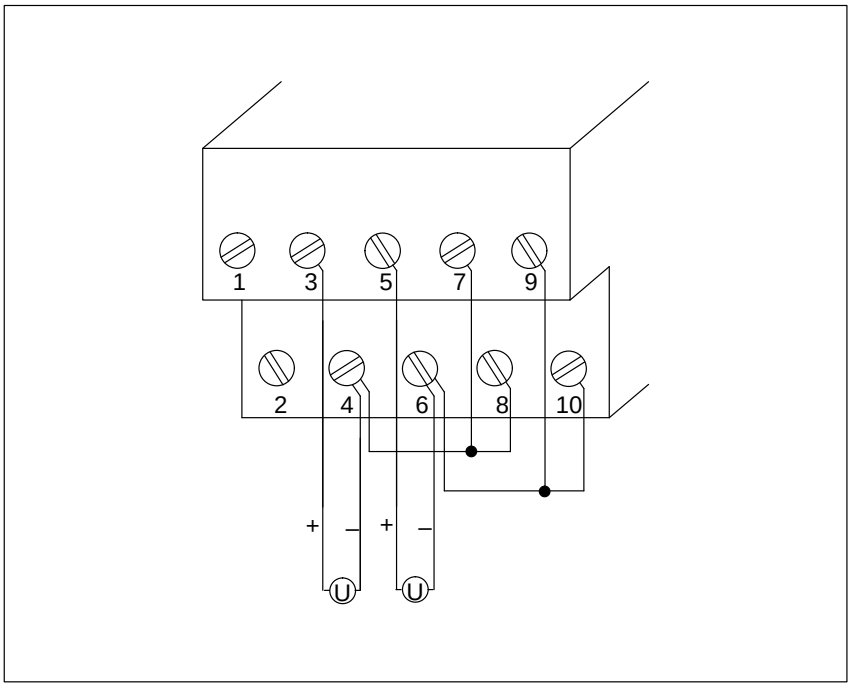

Figure 7-8 Wiring Possibilities for Input Modules (6ES5 464–8MF11)

7.3 Start–Up of Analog Input Modules

When using analog input modules 464–8 through 11, set the intended operating mode using the switches on the front panel. These switches are located on the right side at the top of the front panel of the module.

Set the switch to the available power supply frequency. This selects the integration time of the A/D converters for optimal interference voltage suppression. The frequencies are as follows:

Power frequency 50 Hz → Integration time 20 ms

Power frequency 60 Hz → Integration time 16.66 ms

Set the number of channels you wish to assign on the input module. If there are fewer than four channels, less address space will be assigned and meas–ured values will be updated faster.

Once you activate the broken wire signal, a break in one of the lines to the sensor (thermocouple or PT 100) or in the sensor itself causes the red LED above the function selection switch to light up. At the same time, the broken wire error bit F (bit 1, byte 1) for the faulty channel is set.

The module recognizes a wire break by applying a conventional tripping current to the input terminals and comparing the resulting voltage to a limit value. If there is a wire break in the sensor or the lines, the voltage exceeds the limit value and a “wire break” signal is sent. When the signal at the input is measured with a digital voltmeter, the tripping current pulses cause apparent fluctuations of the signal. Deactivation of the wire break signal does **not** turn off the tripping current.

Table 7-1 Settings for the Operating Mode Switch for Analog Input Modules 464–8 to 11

Function	**Settings for Operating Mode Switch**		
Power Supply Frequency	50 Hz 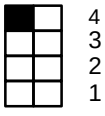	60 Hz 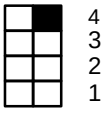	
Operation	1 Channel (Ch 0) 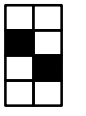	2 Channels (Ch 0 and Ch 1) 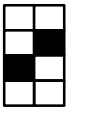	4 Channels (Ch 0 to Ch 3) 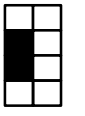
Wire Break	With Wire Break Signal 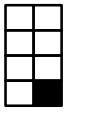	No Wire Break Signal 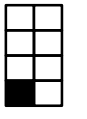	

The following additional operating mode switch selections are possible with analog module **464–8MA21**:

With this function, you can obtain a characteristic linearization of the thermocouples of type J, K, and L.

With module 464–8MA21, the linearization must always be activated together with the corresponding compensation of the reference point temperature.

Thermocouples:
Type J: – 200 °C ... + 200 °C
Type K: – 200 °C ... + 1369 °C
Type L: – 199 °C ... + 900 °C (in steps of 1 °C in each case).

For the thermocouples of type J, K, and L, you can compensate for the temperature of the reference point using a compensating box (see Figure 7-1).

It is also possible to move the reference point to the front of the module by activating the “temperature compensation” function. When thermocouples are directly connected, an internal circuit on the module causes the digital value “0” to be displayed independently of the temperature of the terminal when the temperature at the measuring junction is 0 °C (32 °F). To accomplish this, connect the terminals of the sensors directly to the module (i.e., without a copper extension cable).

Table 7-2 Settings for the Operating Mode Switch for Analog Input Module 464–8MA21

Function	Setting for Operating Mode Switch		
Power Supply Frequency	50 Hz 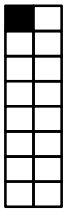	60 Hz 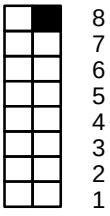	
Operation	1 Channel (Ch 0) 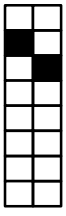	2 Channels (Ch 0 and Ch 1) 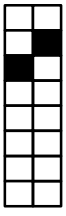	4 Channels (Ch 0 to 3) 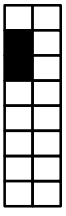

Table 7-2 Settings for the Operating Mode Switch for Analog Input Module 464–8MA21

Function	Setting for Operating Mode Switch			
Wire Break	With Wire Break Signal 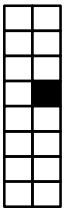		Without Wire Break Signal 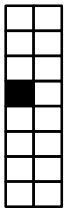	
Characteristic Linearization of the Thermocouples	Without Linearization 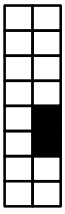	Linearization Type K 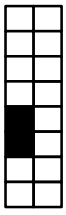	Linearization Type J 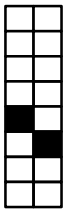	Linearization Type L 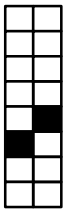
Temperature Compensation	Without Temperature Compensation 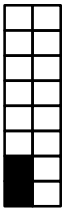	Temperature Compensation Type K 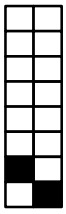		Temperature compensation for Type J und L 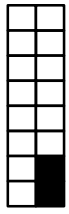

If you have set “characteristic linearization” and “temperature compensation” with the operating mode switches on module **464–8MA21** for the thermocouple used, the reference temperature is 0 °C (32 °F). This means that with 0 °C (32 °F) at the measuring junction, the value “0” is displayed.

If you equip several channels with thermocouples, use the same type of thermocouple. If you select mixed thermocouples, or if you use thermocouples other than type J, K, or L, then you must choose the following settings:

- “No linearization”

  and

- “No temperature compensation”

Compensation is then not possible even with a compensating box because the compensating box is designed only for a certain type of thermocouple.

It is possible to use a thermostat in the terminal box if you use the thermostat temperature in the application software to adjust the thermocouple input offset.

When you set the switches to “no linearization” and “no temperature compensation,” module 464–8MA21 functions just like module 464–8MA11.

Set the switches on analog module **464–8MF21** as illustrated in Table 7-3.

Table 7-3 Settings for the Operating Mode Switch for Analog Input Module 464–8MF21

Function	Settings for Operating Mode Switch	
Power Supply Frequency	50 Hz 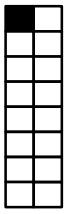	60 Hz 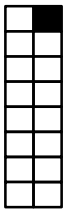
Operation	1 Channel (Ch 0) 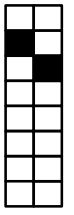	2 Channels (Ch 0 to Ch 1) 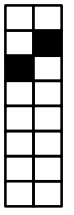
Wire Break	With Wire Break Signal 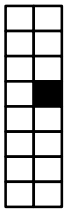	No Wire Break Signal 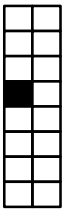
Characteristic Linearization for the PT 100	No Linearization 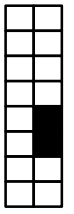	Linearization for PT 100 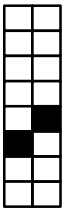

Positions 1 and 2 on the operating mode switch have no function.

If you set the switch to “no linearization” and “no temperature compensation,” module 464–8MF21 functions just like module 464–8MF11.

Characteristic linearization is possible for the following temperature ranges:
PT 100: – 100 °C ... + 850 °C (in steps of 0,5 °C).

7.4 Analog Value Representation of Analog Input Modules

Each analog process signal has to be converted into a digital format to be stored in the process image input table (PII). The analog signals are converted into a binary digit that is written in one of the following ways:

- In one byte (466–8MA11)

  or

- In two bytes (all other analog input modules)

Each bit position has a fixed value in powers of two (see Tables 7-4 and 7-14).

Analog values are represented in two's complement.

Tables 7-5 through 7-11 show the analog value representations of different analog inputs in two–byte format.

Table 7-4 Representation of an Analog Input Value as Bit Pattern

	High Byte								**Low Byte**							
Bit Number	7	6	5	4	3	2	1	0	7	6	5	4	3	2	1	0
Analog Value Represent.	S	2^{11}	2^{10}	2^{9}	2^{8}	2^{7}	2^{6}	2^{5}	2^{4}	2^{3}	2^{2}	2^{1}	2^{0}	X	E	OV

S Sign bit
0 = "+"
1 = "–"

X Irrelevant bits

E Error bit
0 = no wire break
1 = wire break

OV Overflow bit
0 = Measured value 4095 units at the most
1 = Measured value greater than or equal to 4096 units

Table 7-5 Analog Input Modules 464–8MA11, –8MF11, –8MB11 (Bipolar Fixed–Point Number)

Units	Measured Value in mV			High Byte								Low Byte								Range
	1	2	3																	
>4095	100.0	1000.0	2000.0	0	1	1	1	1	1	1	1	1	1	1	1	1	0	0	1	Overflow
4095	99.976	999.75	1999.5	0	1	1	1	1	1	1	1	1	1	1	1	1	0	0	0	Overrange
2049	50.024	500.24	1000.48	0	1	0	0	0	0	0	0	0	0	0	0	1	0	0	0	
2048	50.0	500.0	1000.0	0	1	0	0	0	0	0	0	0	0	0	0	0	0	0	0	
1024	25.0	250.0	500.0	0	0	1	0	0	0	0	0	0	0	0	0	0	0	0	0	
1	0.024	0.24	0.48	0	0	0	0	0	0	0	0	0	0	0	0	1	0	0	0	
0	0.0	0.0	0.0	0	0	0	0	0	0	0	0	0	0	0	0	0	0	0	0	Nominal Range
–1	–0.024	–0.24	–0.48	1	1	1	1	1	1	1	1	1	1	1	1	1	0	0	0	
–1024	–25.0	–250.0	–500.0	1	1	1	0	0	0	0	0	0	0	0	0	0	0	0	0	
–2048	–50.0	–500.0	–1000.0	1	1	0	0	0	0	0	0	0	0	0	0	0	0	0	0	
–2049	–50.024	–500.24	–1000.48	1	0	1	1	1	1	1	1	1	1	1	1	1	0	0	0	Overrange
–4095	–99.976	–999.75	–1999.5	1	0	0	0	0	0	0	0	0	0	0	0	1	0	0	0	
<–4095	–100.0	–1000.0	–2000.0	1	0	0	0	0	0	0	0	0	0	0	0	1	0	0	1	Overflow

1 464–8MA11/–8MA21 “No Linearization” (4 × ± 50 mV)
2 464–8MF11 (2 × ± 500 mV)
3 464–8MB11 (4 × ± 1 V)

Table 7-6 Analog Input Modules 464–8MC11, –8MD11 (Bipolar Fixed–Point Number)

Units	Measured Value in mV		High Byte								Low Byte								Range
	in V [1]	in mA [2]																	
> 4095	20.000	40.0	0	1	1	1	1	1	1	1	1	1	1	1	1	0	0	1	Overflow
4095	19.995	39.9902	0	1	1	1	1	1	1	1	1	1	1	1	1	0	0	0	Overrange
2049	10.0048	20.0098	0	1	0	0	0	0	0	0	0	0	0	0	1	0	0	0	
2048	10.000	20.0	0	1	0	0	0	0	0	0	0	0	0	0	0	0	0	0	
1024	5.000	10.0	0	0	1	0	0	0	0	0	0	0	0	0	0	0	0	0	
1	0.0048	0.0098	0	0	0	0	0	0	0	0	0	0	0	0	1	0	0	0	
0	0.0	0.0	0	0	0	0	0	0	0	0	0	0	0	0	0	0	0	0	Nominal Range
–1	–0.0048	–0.0098	1	1	1	1	1	1	1	1	1	1	1	1	1	0	0	0	
–1024	– 5.000	–10.0	1	1	1	0	0	0	0	0	0	0	0	0	0	0	0	0	
–2048	–10.000	–20.0	1	1	0	0	0	0	0	0	0	0	0	0	0	0	0	0	
–2049	–10.0048	–20.0098	1	0	1	1	1	1	1	1	1	1	1	1	1	0	0	0	Overrange
–4095	–19.995	– 39.9902	1	0	0	0	0	0	0	0	0	0	0	0	1	0	0	0	
<–4095	–20.000	–40.0	1	0	0	0	0	0	0	0	0	0	0	0	1	0	0	1	Overflow

[1] 464–8MC11 ($4 \times \pm 10$ V)
[2] 464–8MD11 ($4 \times \pm 20$ mA)

Table 7-7 Analog Input Module 464–8ME11, 4×4 to 20 mA (Absolute Value)

Units	Measured Value in mA	High Byte								Low Byte								Range
> 4095	> 32.769	0	1	1	1	1	1	1	1	1	1	1	1	1	0	0	1	Overflow
4095	31.992	0	1	1	1	1	1	1	1	1	1	1	1	1	0	0	0	Overrange
2561	20.008	0	1	0	1	0	0	0	0	0	0	0	0	1	0	0	0	
2560	20.0	0	1	0	1	0	0	0	0	0	0	0	0	0	0	0	0	
2048	16.0	0	1	0	0	0	0	0	0	0	0	0	0	0	0	0	0	Nominal Range
512	4.0	0	0	0	1	0	0	0	0	0	0	0	0	0	0	0	0	
511	3.992	0	0	0	0	1	1	1	1	1	1	1	1	1	0	0	0	
384	3.0	0	0	0	0	1	1	0	0	0	0	0	0	0	0	0	0	Transducer Failure?
0	0.0	0	0	0	0	0	0	0	0	0	0	0	0	0	0	0	0	
–1	–0.008	1	1	1	1	1	1	1	1	1	1	1	1	1	0	0	0	
< –4095	<–32.769	1	0	0	0	0	0	0	0	0	0	0	0	1	0	0	1	

Table 7-8 Analog Input Module 464–8MF11, 2 × PT 100 (Unipolar)
Analog Input Module 464–8MF21, 2 × PT 100 “No Linearization” (Unipolar)

Units	Resistance in Ω	High Byte	Low Byte	Range
>4095	≥ 400.0	0 1 1 1 1 1 1 1	1 1 1 1 1 0 0 1	Overflow
4095	399.90	0 1 1 1 1 1 1 1	1 1 1 1 1 0 0 0	Overrange
2049	200.098	0 1 0 0 0 0 0 0	0 0 0 0 1 0 0 0	
2048	200.0	0 1 0 0 0 0 0 0	0 0 0 0 0 0 0 0	Nominal Range
1024	100.0	0 0 1 0 0 0 0 0	0 0 0 0 0 0 0 0	
1	0.098	0 0 0 0 0 0 0 0	0 0 0 0 1 0 0 0	
0	0.0	0 0 0 0 0 0 0 0	0 0 0 0 0 0 0 0	

Table 7-9 Analog Input Module 464–8MF21, 2 × PT 100 “with Linearization” (Bipolar), to DIN IEC 751

Units	Resistance in Ω	Temperature in °C	High Byte	Low Byte	Range
>1766	>400	>883	0 0 1 1 0 1 1 1	0 0 1 1 0 0 0 1	Overflow
1766		883	0 0 1 1 0 1 1 1	0 0 1 1 0 0 0 1	Overrange*
1702		851	0 0 1 1 0 1 0 1	0 0 1 1 0 0 0 1	
1700	390.26	850	0 0 1 1 0 1 0 1	0 0 1 0 0 0 0 0	Nominal Range
1400	345.13	700	0 0 1 0 1 0 1 1	1 1 0 0 0 0 0 0	
1000	280.90	500	0 0 0 1 1 1 1 1	0 1 0 0 0 0 0 0	
600	212.02	300	0 0 0 1 0 0 1 0	1 1 0 0 0 0 0 0	
300	157.31	150	0 0 0 0 1 0 0 1	0 1 1 0 0 0 0 0	
200	138.50	100	0 0 0 0 0 1 1 0	0 1 0 0 0 0 0 0	
2	100.39	1	0 0 0 0 0 0 0 0	0 0 0 1 0 0 0 0	
0	100.00	0	0 0 0 0 0 0 0 0	0 0 0 0 0 0 0 0	
–40	92.16	–20	1 1 1 1 1 1 1 0	1 1 0 0 0 0 0 0	
–80	84.27	–40	1 1 1 1 1 1 0 1	1 0 0 0 0 0 0 0	
–200	60.25	–100	1 1 1 1 1 0 0 1	1 1 0 0 0 0 0 0	
–202		–101	1 1 1 1 1 0 0 1	1 0 1 1 0 0 0 1	Overrange*
–494		–247	1 1 1 1 0 0 0 0	1 0 0 1 0 0 0 1	
<–494		<–247	1 1 1 1 0 0 0 0	1 0 0 1 0 0 0 1	Overflow

* In the overrange, the current slope of the characteristic curve is maintained when leaving the linearized nominal range.

Table 7-10 Analog Input Module 464–8MA21, 4 × ± 50 mV with Linearization and with Temperature Compensation (Bipolar); Thermoelement Type K (Nickel–Chromium/Nickel–Aluminium, according to IEC 584)

Units	Thermo Voltage in mV*	Temperature in °C	High Byte								Low Byte								Range
>2359			0	1	0	0	1	0	0	1	1	0	1	1	1	0	0	1	Overflow
1370		1370	0	0	1	0	1	0	1	0	1	1	0	1	0	0	0	1	Overrange**
1369	54.773	1369	0	0	1	0	1	0	1	0	1	1	0	0	1	0	0	0	
1000	41.269	1000	0	0	0	1	1	1	1	1	0	1	0	0	0	0	0	0	
500	20.640	500	0	0	0	0	1	1	1	1	1	0	1	0	0	0	0	0	
150	6.137	150	0	0	0	0	0	1	0	0	1	0	1	1	0	0	0	0	
100	4.095	100	0	0	0	0	0	0	1	1	0	0	1	0	0	0	0	0	Nominal Range
1	0.039	1	0	0	0	0	0	0	0	0	0	0	0	0	1	0	0	0	
0	0	0	0	0	0	0	0	0	0	0	0	0	0	0	0	0	0	0	
–1	–0.039	–1	1	1	1	1	1	1	1	1	1	1	1	1	1	0	0	0	
–100	–3.553	–100	1	1	1	1	1	1	0	0	1	1	1	0	0	0	0	0	
–101	–3.584	–101	1	1	1	1	1	1	0	0	1	1	1	0	0	0	0	0	Accuracy
–150	–4.912	–150	1	1	1	1	1	0	1	1	0	1	0	1	0	0	0	0	≤ 2 K
–200	–5.891	–200	1	1	1	1	1	0	0	1	1	1	0	0	0	0	0	0	
–201		–201	1	1	1	1	1	0	0	1	1	0	1	1	1	0	0	1	Overrange**
–273			1	1	1	1	0	0	0	0	1	0	0	1	0	0	0	1	Overflow
X		X	X	X	X	X	X	X	X	X	X	X	X	X	X	0	1	0	Wire Break

This value corresponds to the terminal temperature at wire break

* For a reference temperature of 0 °C (32 °F)

** In the overrange, the current slope of the characteristic curve is maintained when leaving the linearized nominal range.

Table 7-11 Analog Input Module 464–8MA21, 4 × ±50 mV with Linearization and with Temperature Compensation (Bipolar); Thermoelement Type J (Iron/Copper–Nickel (Konstantan) according to IEC 584)

Units	Thermo Voltage in mV*	Temperature in °C	High Byte								Low Byte								Range
1485			0	0	1	0	1	1	1	0	0	1	1	0	1	0	0	1	Overflow
1201		1201	0	0	1	0	0	1	0	1	1	0	0	0	1	0	0	1	Overrange**
1200	69.536	1200	0	0	1	0	0	1	0	1	1	0	0	0	0	0	0	0	
1000	57.942	1000	0	0	0	1	1	1	1	1	0	1	0	0	0	0	0	0	
500	27.388	500	0	0	0	0	1	1	1	1	1	0	1	0	0	0	0	0	
100	5.268	100	0	0	0	0	0	0	1	1	0	0	1	0	0	0	0	0	
1	0.05	1	0	0	0	0	0	0	0	0	0	0	0	0	1	0	0	0	
0	0	0	0	0	0	0	0	0	0	0	0	0	0	0	0	0	0	0	Nominal Range
–1	–0.05	–1	1	1	1	1	1	1	1	1	1	1	1	1	1	0	0	0	
–100	–4.632	–100	1	1	1	1	1	1	0	0	1	1	1	0	0	0	0	0	
–150	–6.499	–150	1	1	1	1	1	0	1	1	0	1	0	1	0	0	0	0	
–199	–7.868	–199	1	1	1	1	1	0	0	1	1	1	0	0	1	0	0	0	
–200	–7.890	–200	1	1	1	1	1	0	0	1	1	1	0	0	0	0	0	0	
–201		–201	1	1	1	1	1	0	0	1	1	0	1	1	1	0	0	1	Overrange**
–273			1	1	1	1	0	1	1	1	0	1	1	1	1	0	0	1	Overflow
X		X	X	X	X	X	X	X	X	X	X	X	X	X	X	0	F	0	Wire break

This value corresponds to the terminal temperature at wire break

* For a reference temperature of 0 °C (32 °F)

** In the overrange, the current slope of the characteristic curve is maintained when leaving the linearized nominal range.

Table 7-12 Analog Input Module 464–8MA21, 4 × ±50 mV with Linearization and with Temperature Compensation (Bipolar); Thermoelement Type L (Iron/Copper–Nickel (Konstantan), according to 43710)

Units	Thermo Voltage in mV*	Temperature in °C	High Byte								Low Byte								Range
1361			0	0	1	0	1	0	1	0	1	0	0	0	1	0	0	1	Overflow
901		901	0	0	0	1	1	1	0	0	0	0	1	0	1	0	0	1	Overrange**
900	53.14	900	0	0	0	1	1	1	0	0	0	0	1	0	0	0	0	0	
500	27.85	500	0	0	0	0	1	1	1	1	1	0	1	0	0	0	0	0	
250	13.75	250	0	0	0	0	0	1	1	1	1	1	0	1	0	0	0	0	
100	+5.37	100	0	0	0	0	0	0	1	1	0	0	1	0	0	0	0	0	
1	0.05	1	0	0	0	0	0	0	0	0	0	0	0	0	1	0	0	0	
0	0	0	0	0	0	0	0	0	0	0	0	0	0	0	0	0	0	0	Nominal Range
–1	–0.05	–1	1	1	1	1	1	1	1	1	1	1	1	1	1	0	0	0	
–100	–4.75	–100	1	1	1	1	1	1	0	0	1	1	1	0	0	0	0	0	
–150	–6.60	–150	1	1	1	1	1	0	1	1	0	1	0	1	0	0	0	0	
–190	–7.86	–190	1	1	1	1	1	0	1	0	0	0	0	1	0	0	0	0	
–199	–8.12	–199	1	1	1	1	1	0	0	1	1	1	0	0	1	0	0	0	
–200		–200	1	1	1	1	1	0	0	1	1	1	0	0	0	0	0	1	Overrange**
–273			1	1	1	1	0	1	1	1	0	1	1	1	1	0	0	1	Overflow
X		X	X	X	X	X	X	X	X	X	X	X	X	X	X	0	1	0	Wire Break

This value corresponds to the terminal temperature at wire break

* For a reference temperature of 0 °C (32 °F)

** In the overrange, the current slope of the characteristic curve is maintained when leaving the linearized nominal range.

The **466–8MC11** analog input module stores each analog value in a single byte (see Table 7-13). The other analog input modules store the analog values in words (see Table 7-4).

Table 7-13 Analog Input Module 466–8MC11, 4 × 0 to 10 V

Units	Voltage in mV	Bit Representation
255	≥ 9961	1 1 1 1 1 1 1 1
254	9922	1 1 1 1 1 1 1 0
..	..	. .
128	5000	1 0 0 0 0 0 0 0
..	..	. .
1	39	0 0 0 0 0 0 0 1
0	0	0 0 0 0 0 0 0 0

If you want to read in an analog value with function block FB250 (analog value reading and scaling), you have to pre–process the analog value before calling up FB250.

Example

Analog input module 466–8MC11 is inserted in slot 1, which means that the start address of the module is 72.

The analog values that are read in are stored in the following four consecutive bytes:

1. Analog value (channel 0) → in IB 72
2. Analog value (channel 1) → in IB 73
3. Analog value (channel 2) → in IB 74
4. Analog value (channel 3) → in IB 75.

Block FB72 reads in analog values and pre–processes them for function block FB250 (analog value reading and scaling).

FB72	Explanation
NAME :READ 466	READ IN ALL CHANNELS
0005 :	OF AI 466
0006 :L IW 72	READ ALL FOUR CHANNELS
0007 :T FW 72	AND REARRANGE
0008 :L IW 74	
0009 :T FW 74	
000A :	
000B :L FY 72	PROCESS EACH ANALOG VALUE AND
000C :SLW 6	REWRITE IT IN THE PII SO THAT
000D :T IW 72	FB250 CAN ACCESS IT WITHIN THAT
000E :	SCAN.
000F :L FY 73	
0010 :SLW 6	
0011 :T IW 74	
0012 :	
0013 :L FY 74	
0014 :SLW 6	
0015 :T IW 76	
0016 :	
0017 :L FY 75	
0018 :SLW 6	
0019 :T IW 78	
001A :	
001B :BE	

7.5 Analog Output Modules

Analog output modules convert the bit patterns that are output by the CPU into analog output voltages or currents.

Connection of Loads to Analog Output Modules

No adjustments are necessary if you want to connect loads to analog outputs.

Check the following items before connecting loads:

- The 24 V DC load voltage must be connected to terminals 1 and 2.
- The maximum permissible potential difference between the outputs is 60 V AC.
- Unused outputs must be left open–circuited.

Figure 7-9 shows how to connect loads to the voltage outputs of the following modules.

- 470–8MA11 ($2\times \pm 10$ V)

  and

- 470–8MD11 ($2\times$ +1 to 5 V)

Connect sensor lines (S+ and S –) directly to the load, so that the voltage is measured and regulated directly at the load. Using this method, you can compensate for voltage drops of up to 3 V per line.

You can eliminate the sensor lines if the resistances of the QV and M lines are negligible compared to the load resistance.

In such a case, connect terminal S+ to terminal QV, and terminal S– to M_{ANA}.

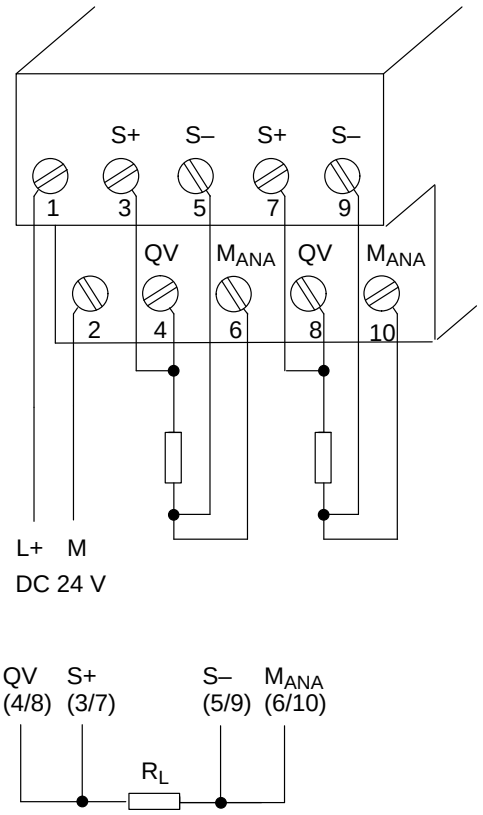

Key:
QV: Analog Output “Voltage”
S”: Sensor Line
M_{ANA}: Chassis Ground Terminal of the Analog Unit
R_L: Load Resistor

Figure 7-9 Load Connection via a Four–Wire Circuit (6ES5 470–8MA11, 6ES5 470–8MD11)

Figure 7-10 shows how to connect loads to the current outputs of the following modules:

- 470–8MB11 (2× ±20 mA)

  and

- 470–8MC11 (2× +4 to 20 mA)

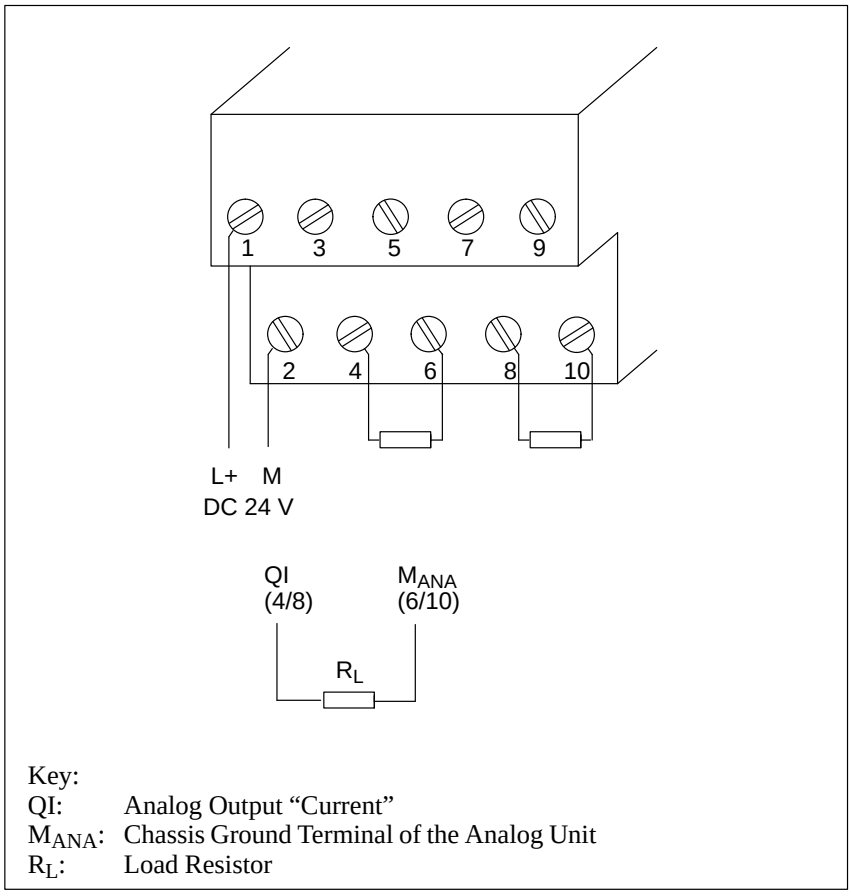

Key:
QI: Analog Output “Current”
M_{ANA}: Chassis Ground Terminal of the Analog Unit
R_L: Load Resistor

Figure 7-10Connection via a Two–Wire Circuit (6ES5 470–8MB11, 6ES5 470–8MC11)

Analog Value Representation of Analog Output Modules

Table 7-14 shows how the analog output value has to be stored in the process image output table (PIQ).

Tables 7-15 and 7-16 show the voltage and currents assigned to the bit patterns.

Table 7-14 Representation of an Analog Output Value as a Bit Pattern

	High Byte								**Low Byte**							
Bit Number	7	6	5	4	3	2	1	0	7	6	5	4	3	2	1	0
Analog Value Represent.	VZ	2^{10}	2^9	2^8	2^7	2^6	2^5	2^4	2^3	2^2	2^1	2^0	X	X	X	X

X: Irrelevant bits

Table 7-15 Output Voltages and Currents for Analog Output Modules (Fixed–Point Number Bipolar)

Units	Output Values		High Byte	Low Byte	Range
	in V [1]	in mA [2]			
1280	12.5	25.0	0 1 0 1 0 0 0 0	0 0 0 0 x x x x	Overrange
1025	10.0098	20.0195	0 1 0 0 0 0 0 0	0 0 0 0 x x x x	
1024	10.0	20.0	0 1 0 0 0 0 0 0	0 0 0 0 x x x x	
512	5.0	10.0	0 0 1 0 0 0 0 0	0 0 0 0 x x x x	
1	0.0098	0.0195	0 0 0 0 0 0 0 0	0 0 0 0 x x x x	
0	0.0	0.0	0 0 0 0 0 0 0 0	0 0 0 0 x x x x	Nominal Range
–1	–0.0098	–0.0195	1 1 1 1 1 1 1 1	1 1 1 1 x x x x	
–512	–5.0	–10.0	1 1 1 0 0 0 0 0	0 0 0 0 x x x x	
–1024	–10.0	–20.0	1 1 0 0 0 0 0 0	0 0 0 0 x x x x	
–1025	–10.0098	–20.0195	1 0 1 1 1 1 1 1	1 1 1 1 x x x x	Overrange
–1280	–12.5	–25.0	1 0 1 1 0 0 0 0	0 0 0 0 x x x x	

[1] 2 × ± 10 V 6ES5 470–8MA11

[2] 2 × ± 20 mA 6ES5 470–8MB11

Table 7-16 Output Voltages and Currents for Analog Output Modules (Unipolar)

Units	Output Values		High Byte	Low Byte	Range
	in V [3]	in mA [4]			
1280	6.0	24.0	0 1 0 1 0 0 0 0	0 0 0 0 x x x x	Overrange
1025	5.004	20.016	0 1 0 0 0 0 0 0	0 0 0 1 x x x x	
1024	5.0	20.0	0 1 0 0 0 0 0 0	0 0 0 0 x x x x	
512	3.0	12.0	0 0 1 0 0 0 0 0	0 0 0 0 x x x x	Nominal Range
1	1.004	4.016	0 0 0 0 0 0 0 0	0 0 0 1 x x x x	
0	1.0	4.0	0 0 0 0 0 0 0 0	0 0 0 0 x x x x	
–1	0.996	3.984	1 1 1 1 1 1 1 1	1 1 1 1 x x x x	
–256	0.0	0.0	1 1 1 1 0 0 0 0	0 0 0 0 x x x x	Overrange
–512	–1.0	–4.0	1 1 0 0 0 0 0 0	0 0 0 0 x x x x	
–1024	–3.0	–12.0	1 1 0 0 0 0 0 0	0 0 0 0 x x x x	
–1280	–4.0	–16.0	1 0 1 1 0 0 0 0	0 0 0 0 x x x x	

[3] 2 × 1 to 5 V 6ES5 470–8MD11

[4] 2 × 4 to 20 mA 6ES5 470–8MC11

Module Spectrum

8

8.1	General Technical Specifications	8-2
8.2	IM 318–B Interface Module (6ES5 318–8MB11) (6ES5 318–8MB12) (6ES5 318–8MC11)	8-3
8.3	Power Supply Modules	8-7
8.4	Bus Units	8-12
8.5	Interface Modules	8-14
8.6	Digital Input Modules	8-16
8.7	Digital Output Modules	8-26
8.8	Digital Input / Output Modules	8-39
8.9	Analog Input Modules	8-41
8.10	Analog Output Modules	8-59

Tables

8-1	Binary representation of the measured value	8-58

Module Spectrum

8

In this chapter you will find the technical specifications of all input and output modules which can be used in the “ET 200 Distributed I/0 System”.

8.1 General Technical Specifications

Climatic Environmental Conditions	
Temperature Operating	
• horizontal design	0 ... + 60 °C
• vertical design	(32 to 140 °F) 0 ... + 40 °C (32 to 140 °F)(Air–intake temperature, measured on the underside of the module)
Temperature Nonoperating	– 40 ... + 70 °C (− 40 to + 150 °F)
Temperature change	
• operating	max. 10 °C/h (50 °F/h)
• nonoperating	max. 20 °C/h (68 °F/h)
Relative humidity to DIN 40040	15 to 95 % (indoor), noncondensing
Atmospheric pressure	
• operating	860 to 1060 hPa
• nonoperating	660 to 1060 hPa
Pollutants	
• SO_2	≤ 0.5 ppm (rel. humidity ≤ 60 %, noncondensing)
• H_2S	≤ 0.1 ppm (rel. humidity ≤ 60 %, noncondensing)

Mechanical Environmental Conditions	
Vibration to IEC 68–2–6 tested with	
• 10 ≤ f < 57 Hz	• constant amplitude 0.075 mm
• 57 ≤ f < 150 Hz	• constant acceleration 1g
• mode of vibration	• frequency sweeps with a sweep rate of 1 octave/min.
• period of vibration	• 10 frequency sweeps per axis in each of the 3 perpendicular axes
• operating conditions	• to IEC 1131–2
Shock to IEC 68–2–27	
• type of shock	• semisinusoidal
• shock intensity	• peak value 15 g, time 11 ms
• direction of shock	• 2 shocks in each of the 3 perpendicular axes
Free–fall to IEC 68–2–31	
• tested with	height of fall 50 mm

Electromagnetic Compatibility (EMC) / Noise Immunity	
Electrostatic discharge test to IEC 801–2	Discharge on all parts that are accessible to the operator during normal operation
• test voltage	2.5 kV (Rel.humidity 30 to 95%)
Radiated electromagnetic field test to IEC 801–3	Field strength 3 V/m
Fast transient burst to IEC 801–4, class III	
Power supply modules	
• supply voltage 24 V DC	1 kV
• supply voltage 115 /230 V AC	2 kV
• analog input/output modules	1 kV
• digitaligital input/output modules	
for V = 24 V	1 kV
for V > 24 V	2 kV
• Communications interface	1 kV

Degree of Protection to IEC/VDE	
Degree of protection to IEC 529	
• type	IP 20
• class	I to IEC 536
Insulation rating	
• between electrically independent circuits and with circuits connected to a central grounding point	to DIN VDE 0160 (05.1988)
• between all circuits and a central grounding point	to DIN VDE 0160 (05.1988)
Test voltage for a rated voltage V_{inputs} of the circuits (AC/DC)	SINe, 50 Hz
V_{input} = 0 to 50 V	500 V
V_{input} = 50 to 125 V	1250 V
V_{input} = 125 to 250 V	1500 V

8.2 IM 318–B Interface Module (6ES5 318–8MB11) (6ES5 318–8MB12) (6ES5 318–8MC11)

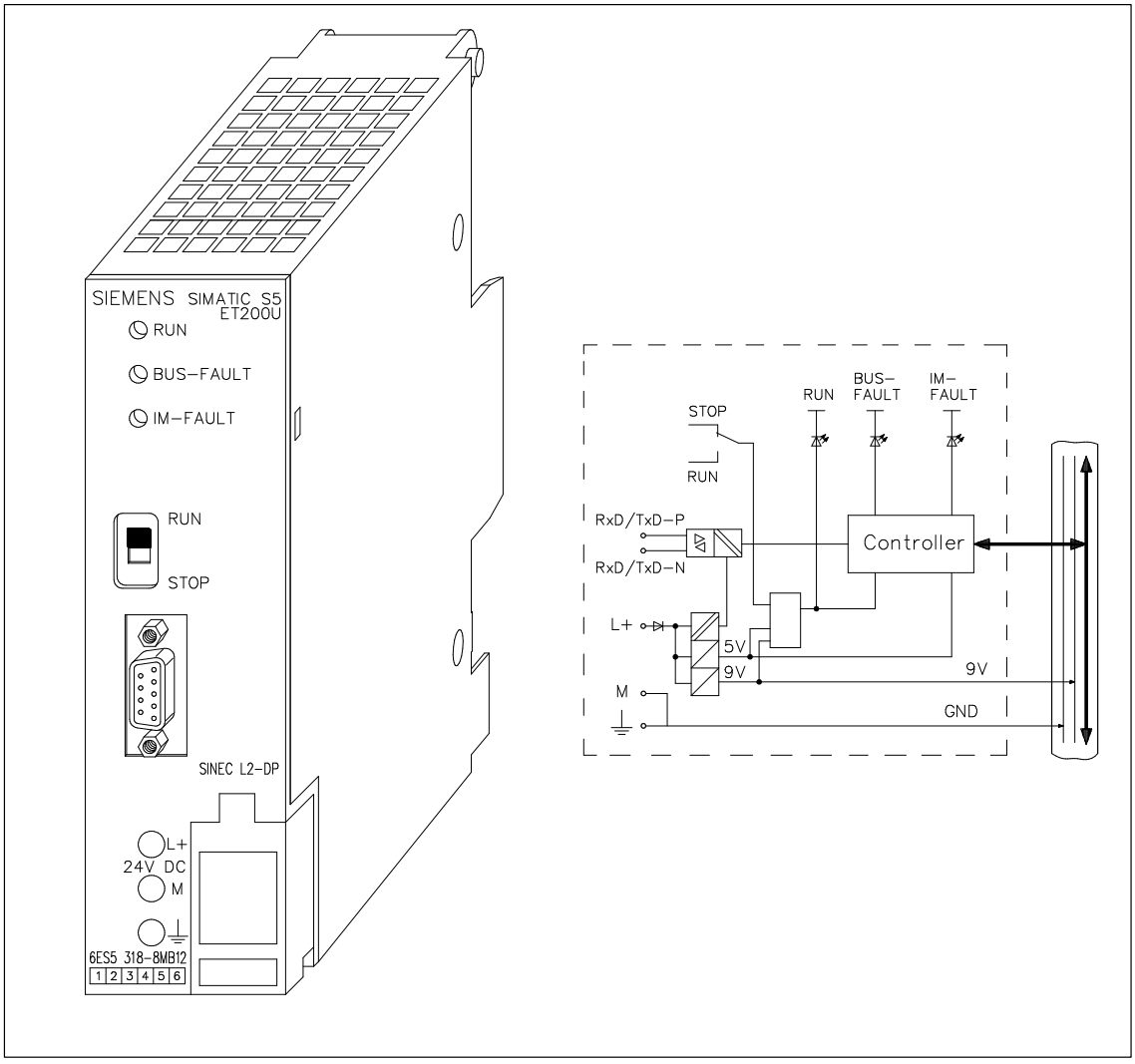

The ET 200U(DP Standard) slave station supports the following functions:

- the “FREEZE” und “SYNC” control commands
- station numbers: 1 to 125

Note

The above functions are not supported by COM ET 200 (version 4.0)!

Technical Specifications	
Current consumption 24 V (20 to 30 V, polarized)	≤ 150 mA internal ≤ 800 mA with fully loaded I/O bus
Output voltage/current	9 V (I/O bus) / ≤ 700 mA at 60 °C (140 °F) ≤ 900 mA at 40 °C (104 °F)
Power failure backup	typ. 20 ms
Galvanic isolation between internal I/O bus and SINEC L2–DP	yes

Isolation voltage for SINEC L2–DP interface	500 V
Test voltage with a rated isolation voltage V_{input} of the circuits (AC/DC)	
V_{input} = 0 to 50 V tested according to	500 V IEC 65A (CO) 22
Weight of the module	360 g (12.6 oz.)
Dimensions (W x H x D)	
in mm	45 × 162 × 125
(in.)	(1.8 × 6.4 × 4.9)

318–8MB11 dimension drawing

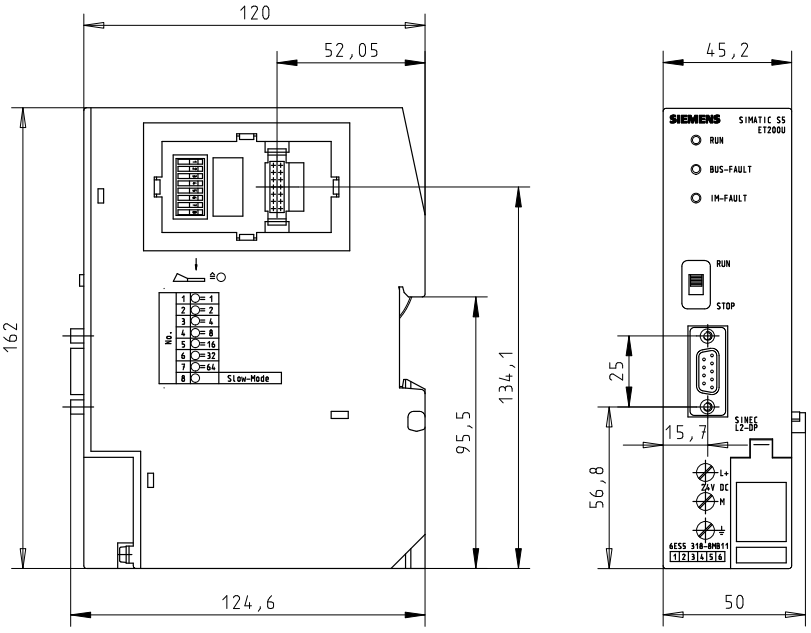

318–8MB12 dimension drawing

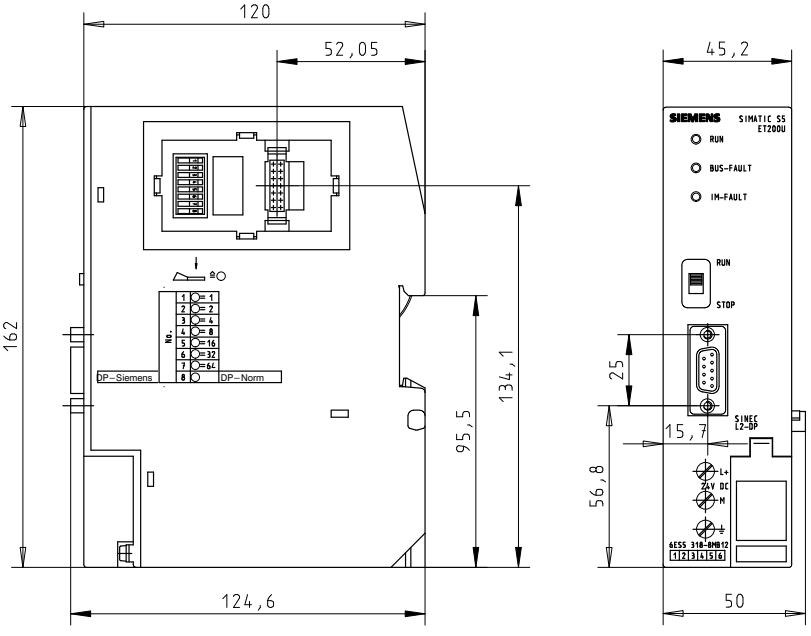

318–8MC11 dimension drawing

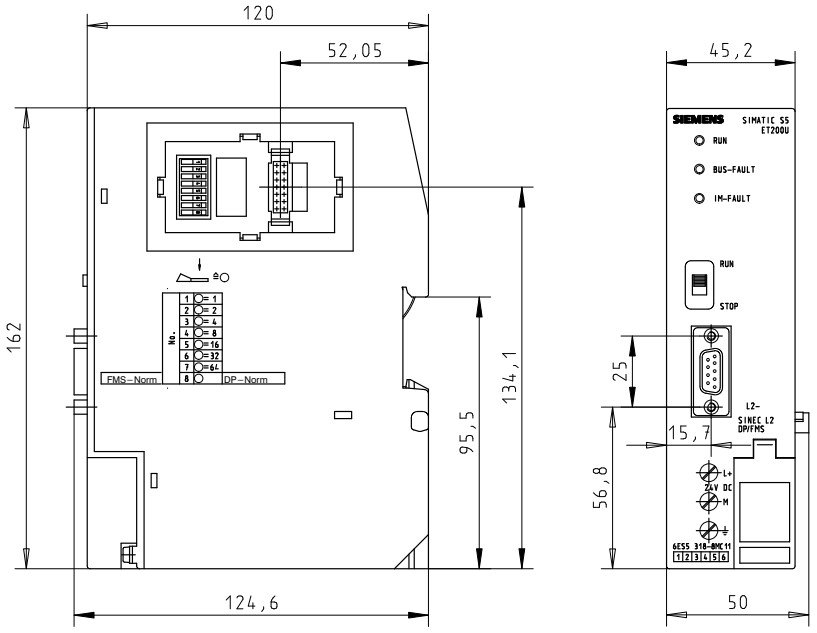

8.3 Power Supply Modules

Power Supply Module PS 931 115 / 230 V AC; 24 V DC / 2 A (6ES5 931–8MD11)

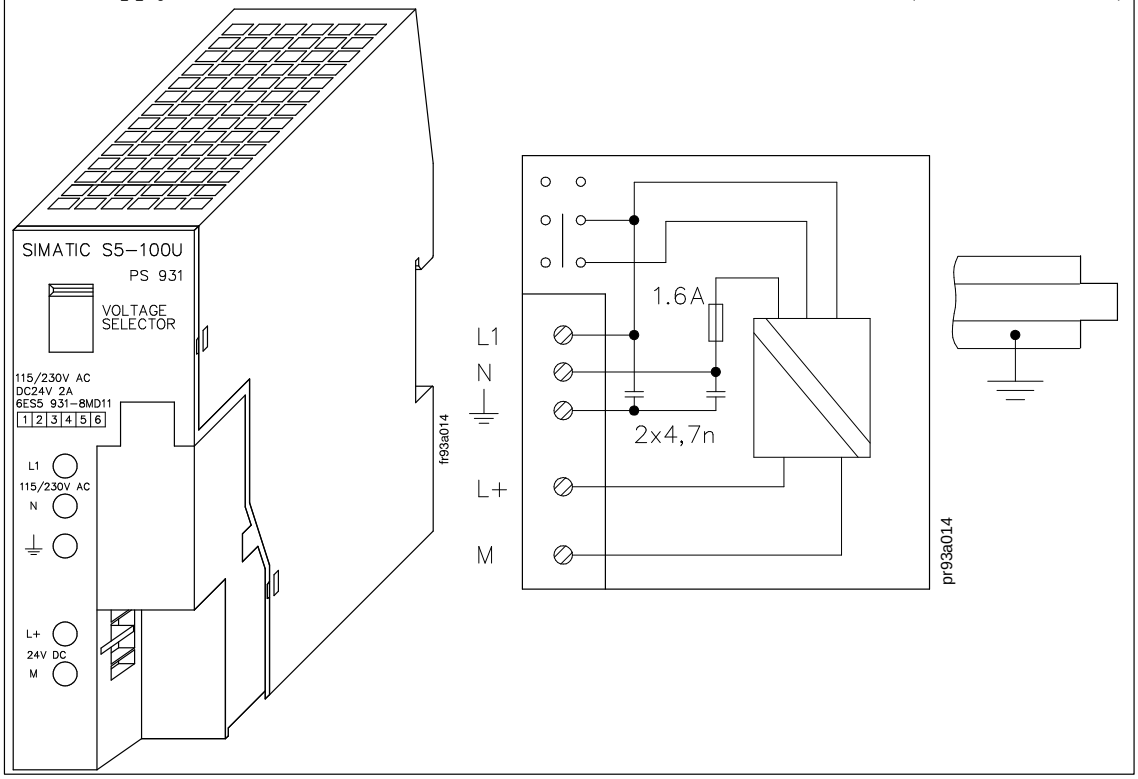

Technical Specifications	
Input voltage	
• rated value	115 / 230 V AC
• permissible range	92 to 132 V / 187 to 253 V
Line frequency	
• rated value	50 / 60 Hz
• permissible range	47 to 63 Hz
Input current at 115/230 V	
• rated value	0.9/0.6 A
Efficiency	approx. 85 %
Power consumption	approx. 58 W
Output voltage	
• rated value	24 V DC
• permissible range	22.8 to 25.2 V
• open–circuit voltage	yes
Output current	
• rated value	2 A

Buffering of line voltage dips	
• duration of voltage dips	20 ms at 187 V/2 A
• repetition rate	1 s
Short–circuit protection	power limiting, electr. cutoff non–latching
Fault LED	no
Protection class	class 1
Galvanic isolation	yes
Conductor cross–sectional area	
• stranded (with core end	2×0.5 to 1.5 mm^2
• sleeves)	
• solid	2×0.5 to 2.5 mm^2
Isolation rating	VDE 0160, VDE 0805 (transformer)

Rated isolation voltage (+24 V to L1)	250 V AC
• isolation group	2 × B
• tested with	230 V AC
Dimensions B × H × D (mm) (in.)	45.4 × 135 × 120

Power loss of the module	typ. 10 W
Weight	approx. 500 g (1.1 lbs.)

When connecting electromagnetically susceptible loads, we recommend to use a line filter on the 24 V side (e.g. the Siemens filter No. B84114–D–B20).

Power Supply Module PS 935 **(6ES5 935–8ME11)**

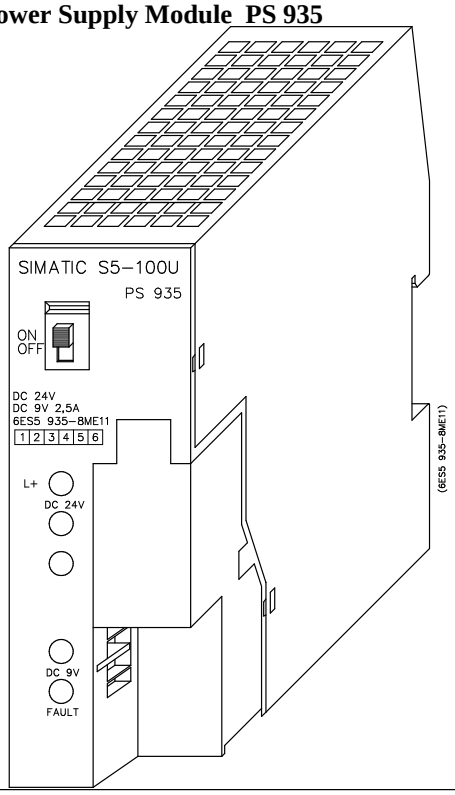

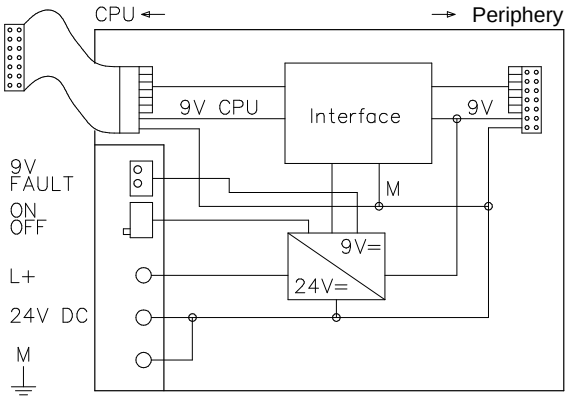

Technical Specifications	
Address identifier for ET 200U	(2 slots)
• DP Siemens	4DI/4DI or 008/008
• DP Standard	8DI/8DI or 016/016
Number of inputs (only internal)	2 × 4 bits
Input voltage	
• rated value	24 V DC
• permissible range	dyn. 18.5 to 30.2V DC stat. 20.4 to 28.8 V DC
• Polarity reversal protection	yes
Radio interference level	A to VDE 0871
Input current at 24 V DC	
• rated value	1.25 A
• inrush current limitation	15 times rated current
• efficiency	approx. 75 %
Output voltage	
• rated value	9 V DC
• permissible range	8.55 to 9.45 V
• open–circuit voltage	yes
Output current	
• rated value	2,5 A
• permissible range	0.0 to 2.5 A
• overload recognition	2.5 to 2.7 A

Buffering during mains voltage dips	
• duration of voltage dip	20 ms at 2.4 V / 2.5 A
• repeat rate	1 s
Short–circuit protection (output side)	yes, electronic switch–off, non–retentive
Diagnostics	yes • 24 V DC input voltage • 9 V output voltage • short circuit/overload
Fault indication	yes
Class of protection	class 1
Galvanic isolation	no
Conductor cross–section	
• flexible (with core end sleeve)	2 × 0.5 to 1.5 mm^2
• solid	2 × 0.5 to 1.5 mm^2
Power consumption	approx. 30 W
Dimensions in mm (W × H × D)	45.4 × 135 × 120
Power loss of the module	10 W
Weight	500 g (1.1 lbs)

PS 2410 Power Supply Module **(6EW1 380–4AB01)**

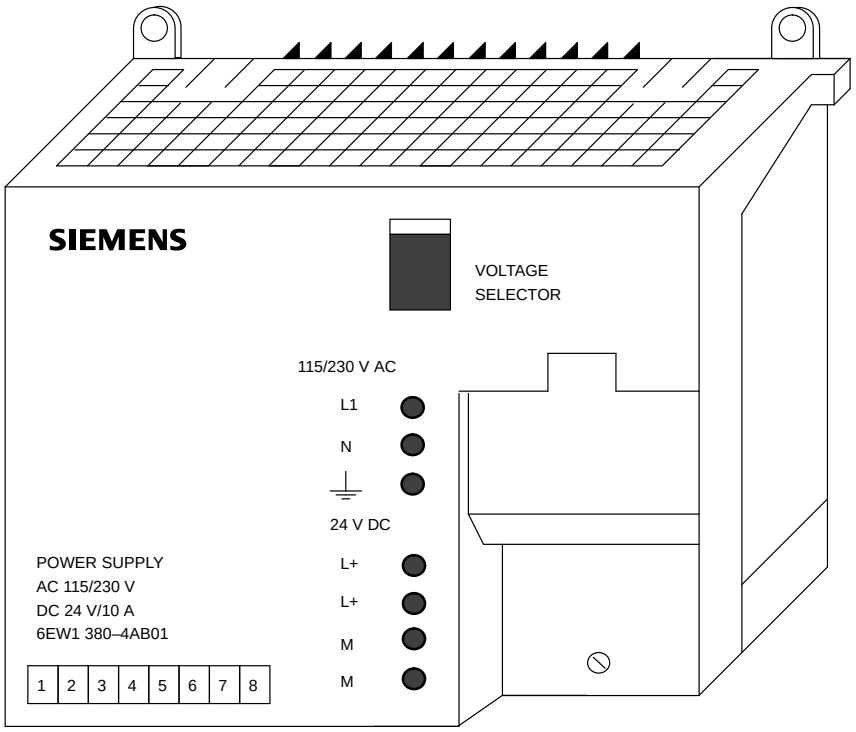

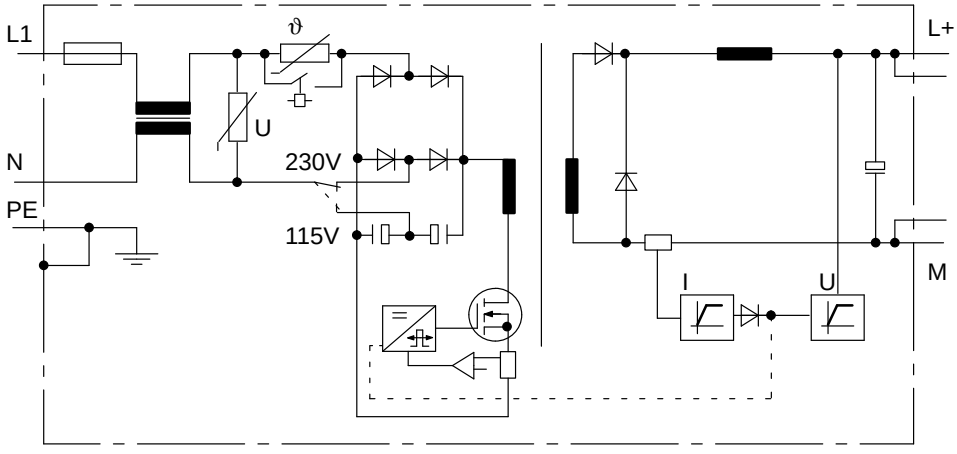

Technical Specifications	
Input voltage V_{input}	120 V / 230 V AC (selectable)
• Permissible range, continuously	93 V to 132 V / 187 V to 264 V AC
• Frequency	47 Hz to 63 Hz
• Inrush current	< 24 A
Efficiency under rated conditions	82 %
Output voltage V_{output}	
• Rated output voltage	24 V DC
• Tolerance	± 5 %
• Residual ripple	100 mV_{ss}
• Switching surges (at 30 MHz)	500 mV_{ss}
Output current I_{output}	
• Rated output current	10 A
Short–circuit protection	Electronic
Current limiting	
• Threshold value	approx. 1.1 I_{AN}
Overvoltage protection	–
Voltage response	
• Dynamic at load change (10 to 90 %)	5 %
• Correction time	3 ms
Bridging of line voltage drops	10 ms (at 230 V)

Permissible ambient temperature	
• Self–ventilation during operation	0 °C to 60 °C
• During storage/shipping	–25 °C to 85 °C
Humidity class to DIN 40 040	F
Safety class	I
Degree of protection (DIN 40 050, IEC 144)	IP 20
Electrical isolation	To VDE 0160, VDE 0805
• Test voltage, primary/secondary	3.75 kV AC eff., UL 508, File E 143289
RI specification to VDE 0871	Class A
Design	Snap–on housing
Dimensions (W x H x D) mm	190 × 126 × 135
Connection	Via screw–type terminals
• Cross–section	1.5 mm^2, stranded 2.5 mm^2, solid
Sensor line	No
Powerfail signal	No
Weight	approx. 2.5 kg (5.5 lbs.)

Note

The performance data specified are referred to vertical installation of the module. Horizontal installation is possible for ambient temperatures < 40 °C and if the power output is reduced to 24 V / 6 A.

8.4 Bus Units

Bus Unit (SIGUT) **(6ES5 700–8MA11)**

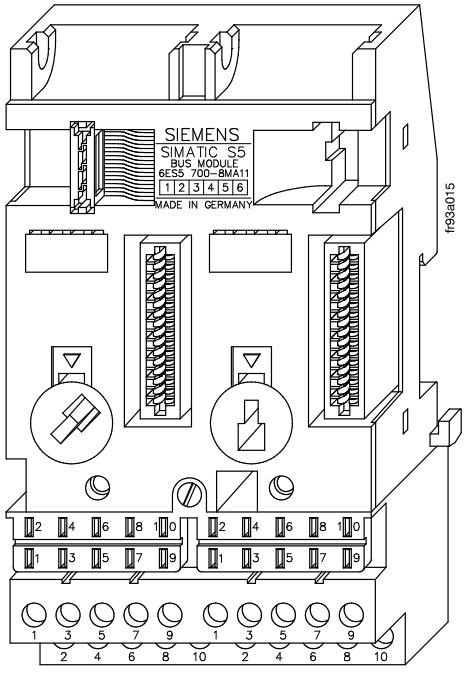

Technical Specifications	
Type of connection	SIGUT screw–type terminals
Number of plug–in modules	2
Number of bus units per programmable controller	max. 16
Connection between two bus units	ribbon cable
Number of terminals	10
Rated isolation voltage (+9 V to ⏚)	12 V AC
• isolation group	1 × B
• tested with	500 V AC

Conductor cross sectional area	
• stranded *	2 × 0.5 to 1.5 mm^2
• solid	2 × 0.5 to 2.5 mm^2
Current consumption	
• from +9 V (CPU)	typ. 1 mA
Dimensions W × H × D (mm)	91.5 × 162 × 39
Weight	approx. 300 g (10.6 oz.)

* with core end sleeves

Bus Unit (Crimp–Snap–In) **(6ES5 700–8MA21)**

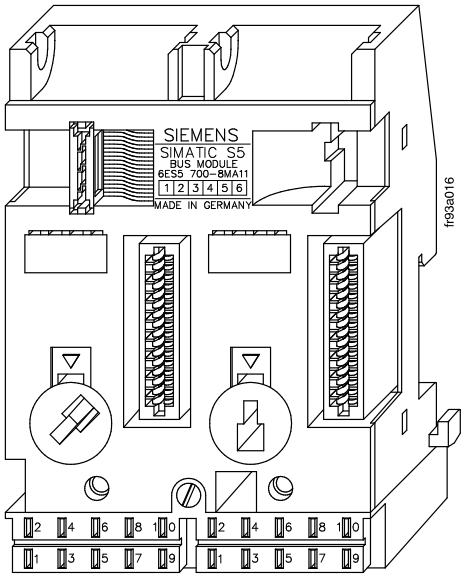

Technical Specifications	
Type of connection	Crimp–snap–in
Number of plug–in modules	2
Number of bus units per programmable controller	max. 16
Connection between two bus units	ribbon cable
Number of terminals	10
Conductor cross sectional area	
• stranded	0.5 to 1.5 mm^2

Rated isolation voltage	
(+9 V to ⏚)	12 V AC
• isolation group	1 × B
• tested with	500 V AC
Current consumption	
• from +9 V (CPU)	typ. 1 mA
Dimensions	
W × H × D (mm)	91.5 × 135 × 39
(in.)	(3.6 × 5.3 × 1.5)
Weight	approx. 250 g (8.8 oz.)

8.5 Interface Modules

Interface Module IM 315 **(6ES5 315–8MA11)**

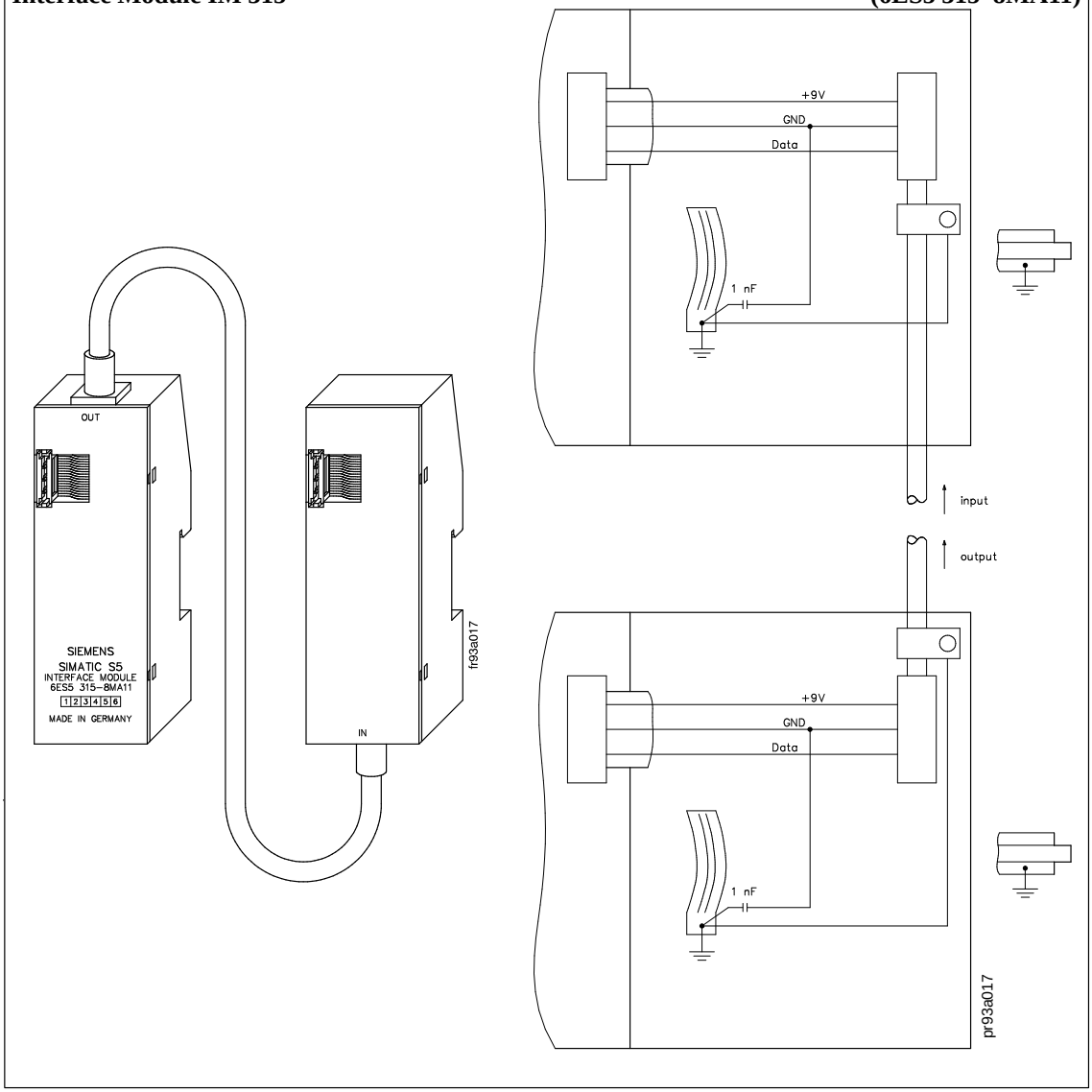

Technical Specifications	
Current supply to the expansion unit	max. 2.5 A
Number of interface modules per PLC	max. 1
Permissible potential difference between ⏚ (IM 315) and central ground point (CPU)	±1 V

Rated isolation voltage (+9 V to ⏚)	12 V AC
• isolation group	1×B
• tested with	500 V AC
Dimensions W×H×D (mm)	2×(45.4×135×39)
(in.)	2×(1.8×5.3×1.5)
Current consumption	
• from +9 V (CPU)	typ. 1 mA
Weight	approx. 280 g (9.8 oz.)

Interface Module IM 316 **(6ES5 316–8MA12)**

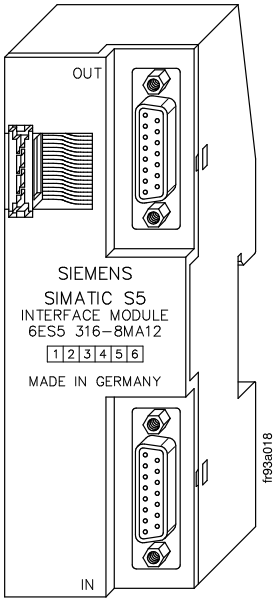

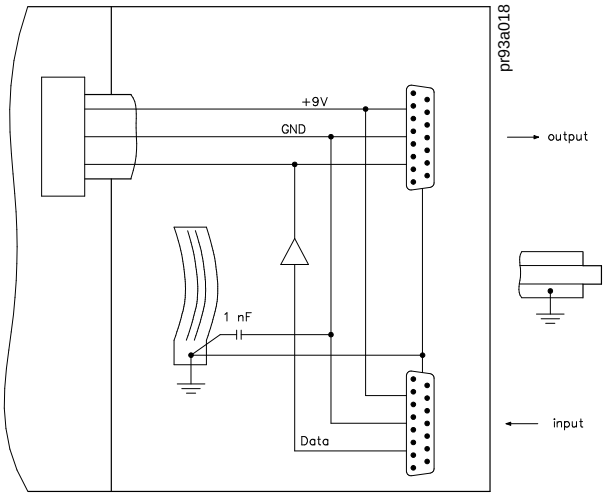

Technical Specifications	
Current supply to the expansion unit	max. 2.5 A
Number of interface modules per PLC	max. 4
Cable connectors for the IM 316	
• cable connector (0.5 m)	6ES5 712–8AF00
• cable connector (2.5 m)	6ES5 712–8BC50
• cable connector (5.0 m)	6ES5 712–8BF00
• cable connector (10 m)	6ES5 712–8CB00
Cable insulation in ducts	permissible

Permissible potential difference between ⏚ (IM 316) and central ground point (CPU)	± 1 V
Rated isolation voltage (+9 V to ⏚)	12 V AC
• isolation group	1 × B
Dimensions	
W × H × D (mm)	45.4 × 135 × 39
(in.)	(1.8 × 5.3 × 1.5)
Current consumption	
• from +9 V (CPU)	typ. 27 mA
Weight	approx. 120 g (4.2 oz.)

8.6 Digital Input Modules

Digital Input Module 4 × 24 V DC **(6ES5 420–8MA11)**

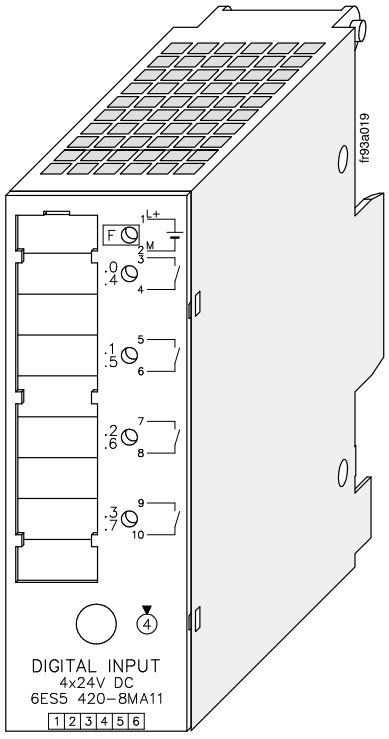

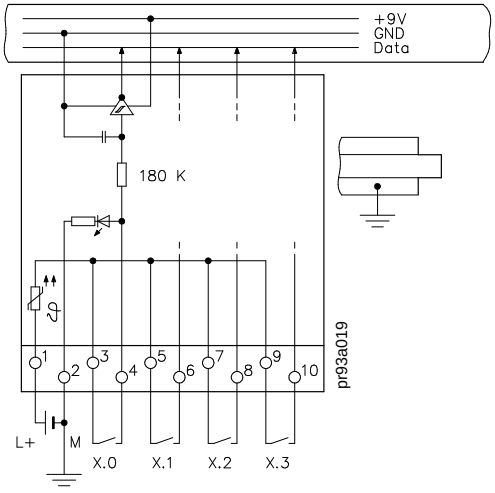

Technical Specifications	
Address identifier for ET 200U	
• DP Siemens	4DI or 008
• DP Standard	8DI or 016
Number of inputs	4
Galvanic isolation	no
• in groups of	4
Input voltage L+	
• rated value	24 V DC
• for “0” signal	0 to 5 V
• for “1” signal	13 to 33 V
Input current at signal “1”	typ. 7 mA (at 24 V)
Inherent delay	
• from “0” to “1”	typ. 2.5 ms*
• from “1” to “0”	typ. 5 ms*

Length of cable	
• unshielded	max. 100 m (330 ft.)
Rated isolation voltage**	
(+9 V to ⏚)	12 V AC
• isolation group	1 × B
Fault LED (red)	no input voltage L+
Connection of 2–wire BERO proximity switches	possible
• residual current	≤ 1.5 mA
Current consumption	
• from +9 V (CPU)	typ. 16 mA
Power loss of the module	typ. 0.8 W
Weight	approx. 205 g (7.2 oz.)

* Delays are voltage–dependent

** Relevant only for ungrounded configuration in the ET 200U

Digital Input Module 8 × 24 V DC **(6ES5 421–8MA12)**

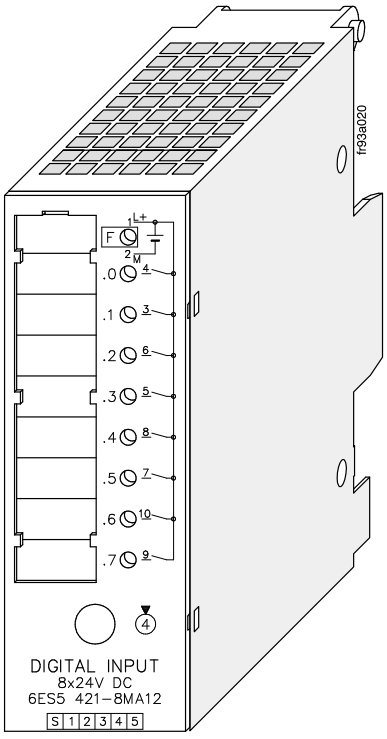

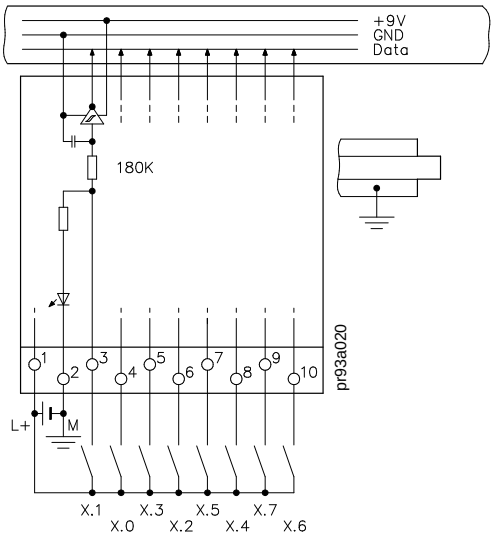

Technical Specifications	
Address identifier for ET 200U	
• DP Siemens	8DI or 009
• DP Standard	8DI or 016
Number of inputs	8
Galvanic isolation	no
• in groups of	8
Input voltage L+	
• rated value	24 V DC
• for “0” signal	0 to 5 V
• for “1” signal	13 to 33 V
Input current at “1” signal	typ. 7 mA (at 24 V)
Inherent delay	
• from “0” to “1”	typ. 2.3 ms*
• from “1” to “0”	typ. 4.5 ms*
Length of cable	
• unshielded	max. 100 m (330 ft.)

Rated isolation voltage** (+9 V to ⏚)	12 V AC
• isolation group	1 × B
Fault LED (red)	no input voltage L+/M
Connection of 2–wire BERO proximity switches	possible
• residual current	≤ 1.5 mA
Current consumption	
• from +9 V (CPU)	typ. 34 mA
Power loss of the module	typ. 1.6 W
Weight	approx. 190 g (6.7 oz.)

* Delays are voltage–dependent
** Relevant only for ungrounded configuration in the ET 200U

Digital Input Module **(6ES5 422–8MA11)**
Crimp Snap–in Connector, 40–Pin **(6ES5 490–8MA12)**
Screw Plug Connector, 40–Pin **(6ES5 490–8MB11)**

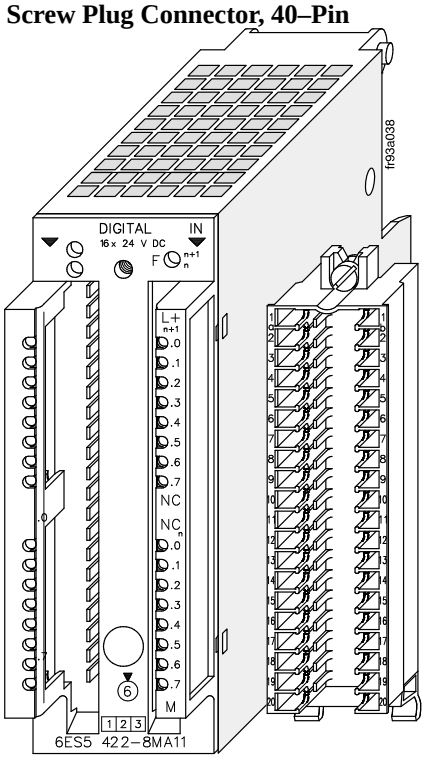

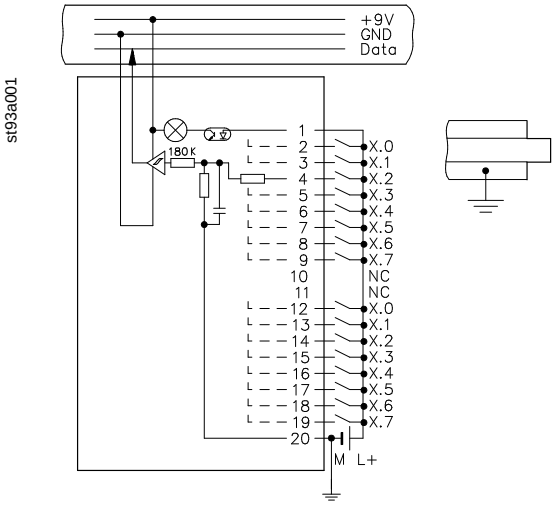

Technical Specifications	
Address identifier for ET 200U	
• DP Siemens	027
• DP Standard	017 or 080
Number of inputs	16
Galvanic isolation	no
Input voltage L+	
• rated value	24 V DC
• for “0” signal	0 to 5 V
• for “1” signal	13 to 30 V
Input protection	
• against polarity reversal	no, fuse trips
• against overvoltage	up to 33 V
Input current at “1” signal	typ. 4.5 mA
Inherent delay	
• from “0” to “1”	typ. 4 ms
• from “1” to “0”	typ. 3 ms

Fault LED (red)	at L+/M interrupt
Connection of 2–wire BERO proximity switches	possible
• residual current	≤ 1.5 mA
Current consumption	
• from +9 V (CPU)	typ. 50 mA
Length of cable	
• unshielded	100 m (330 ft.)
Rated isolation voltage (+9 V to ⏚)	12 V AC
• isolation group	1 × B
EMC noise immunity to VDE 801–4, severity 3	2 kV
Power loss of the module	typ. 4.5 W
Weight	approx. 190 g

Digital Input Module 4 × 24 to 60 V DC **(6ES5 430–8MB11)**

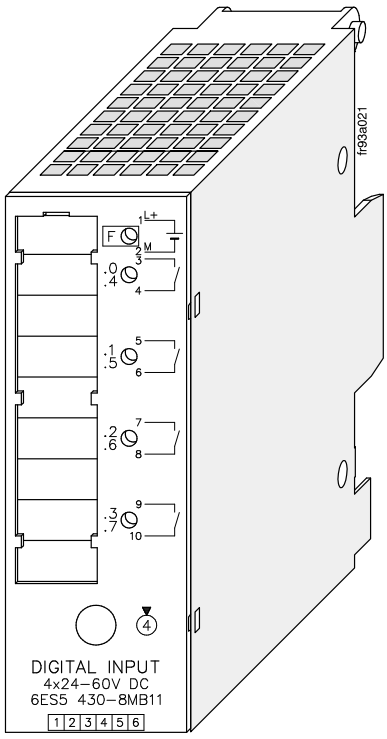

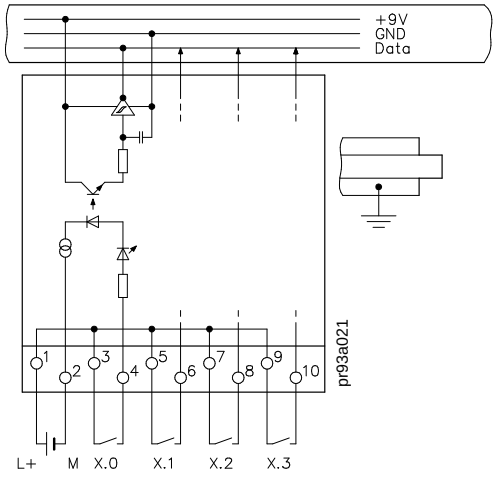

Technical Specifications	
Address identifier for ET 200U	
• DP Siemens	4DI or 008
• DP Standard	8DI or 016
Number of inputs	4
Galvanic isolation	yes (optocoupler)
• in groups of	4
Input voltage L+	
• rated value	24 V DC
• for “0” signal	–33 to 8 V
• for “1” signal	13 to 72 V
Input current at “1” signal	typ. 4.5 to 7.5 mA
Inherent delay	
• from “0” to “1”	typ. 3 ms (1.4 to 5 ms)
• from “1” to “0”	typ. 3 ms (1,4 to 5 ms)
Fault LED (red)	no input voltage L+

Connection of 2–wire BERO proximity switches	possible
• residual current	≤ 1.5 mA
Length of cable	
• unshielded	max. 100 m (330 ft.)
Rated isolation voltage (+9 V to L+)	60 V AC
• isolation group	2 × B
• tested with	1250 V AC
Rated isolation voltage (+9 V to ⏚)	12 V AC
• isolation group	1 × B
• tested with	500 V AC
Current consumption	
• from +9 V (CPU)	5 mA
• from L+	max. 35 mA
Power loss of the module	typ. 2 W
Weight	approx. 200 g (7 oz.)

Digital Input Module 4 × 115 V AC **(6ES5 430–8MC11)**

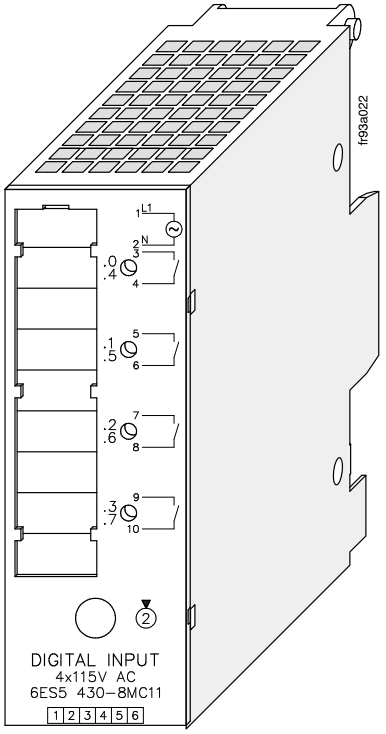

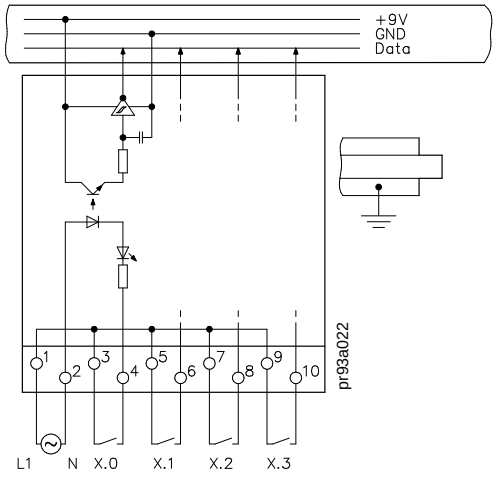

Technical Specifications	
Address identifier for ET 200U	
• DP Siemens	4DI or 008
• DP Standard	8DI or 016
Number of inputs	4
Galvanic isolation	yes (optocoupler)
• in groups of	4
Input voltage L1	
• rated value	115 V AC/DC
• for “0” signal	0 to 40 V
• for “1” signal	85 to 135 V
• frequency	47 to 63 Hz
Input current at “1” Signal	typ. 14 mA at 115 V AC typ. 6 mA at 115 V DC
Inherent delay	
• from “0” to “1”	typ. 10 ms
• from “1” to “0”	typ. 20 ms

Length of cable	
• unshielded	max. 100 m (330 ft.)
Rated isolation voltage (+9 V to L1)	125 V AC
• isolation group	2 × B
• tested with	1250 V AC
Rated isolation voltage (+9 V to ⏚)	12 V AC
• isolation group	1 × B
• tested with	500 V AC
Connection of 2–wire BERO proximity switches	possible
• residual current	≤ 5 mA
Current consumption	
• from +9 V (CPU)	typ. 16 mA
Power loss of the module	typ. 2.8 W
Weight	approx. 210 g (7.4 oz.)

Digital Input Module 4 × 230 V AC **(6ES5 430–8MD11)**

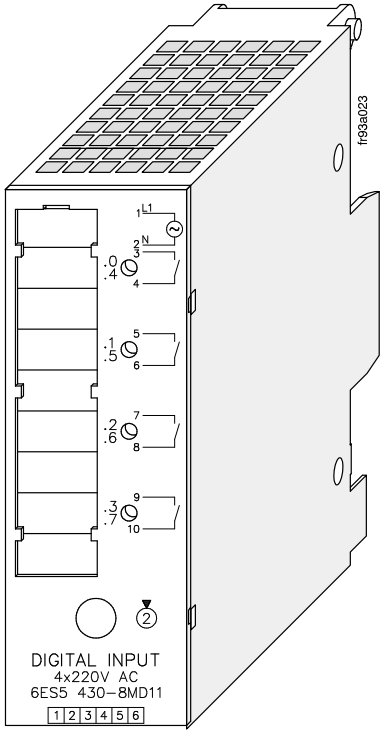

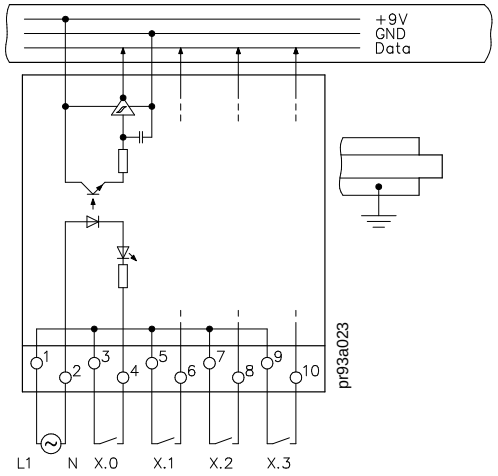

Technical Specifications	
Address identifier for ET 200U	
• DP Siemens	4DI or 008
• DP Standard	8DI or 016
Number of inputs	4
Galvanic isolation	yes (optocoupler)
• in groups of	4
Input voltage L1	
• rated value	230 V AC/DC
• for “0” signal	0 to 70 V
• for “1” signal	170 to 264 V
• frequency	47 to 63 Hz
Input current at signal “1”	typ. 16 mA at 230 V AC typ. 2.5 mA at 230 V DC
Inherent delay	
• from “0” to “1”	typ. 10 ms
• from “1” to “0”	typ. 20 ms

Length of cable	
• unshielded	max. 100 m (330 ft.)
Rated isolation voltage (+9 V to L1)	250 V AC
• isolation group	2 × B
• tested with	1500 V AC
Rated isolation voltage (+9 V to ⏚)	12 V AC
• isolation group	1 × B
• tested with	500 V AC
Connection of 2–wire BERO proximity switches	possible
• residual current	≤ 5 mA
Current consumption	
• from +9 V (CPU)	typ. 16 mA
Power loss of the module	typ. 2.5 W
Weight	approx. 210 g (7.4 oz.)

Digital Input Module 8 × 24 V DC **(6ES5 431–8MA11)**

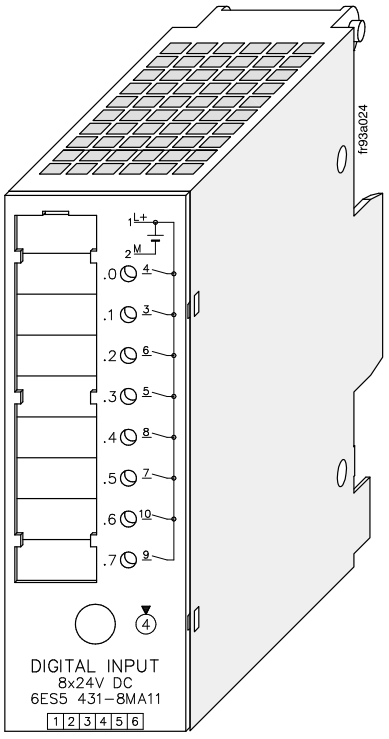

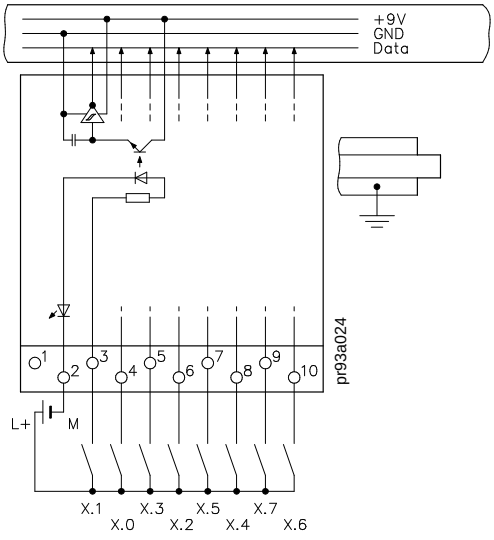

Technical Specifications	
Address identifier for ET 200U	
• DP Siemens	8DI or 009
• DP Standard	8DI or 016
Number of inputs	8
Galvanic isolation	yes (optocoupler)
•in groups of	8
Input voltage L+	
• rated value	24 V DC
• for “0” signal	0 to 5 V
• for “1” signal	13 to 33 V
Input current at “1” signal	typ. 8.7 mA (at 24 V)
Inherent delay	
• from “0” to “1”	typ. 5.5 ms
• from “1” to “0”	typ. 4 ms
Length of cable	
• unshielded	max. 100 m (330 ft.)

Rated isolation voltage (+9 V to ⏚)	12 V AC
• isolation group	2 × B
• tested with	500 V AC
Rated isolation voltage (+9 V to L+)	30 V AC
• isolation group	2 × B
• tested with	500 V AC
Connection of 2–wire BERO proximity switches	possible
• residual current	≤ 1.5 mA
Current consumption	
• from +9 V (CPU)	typ. 32 mA
Power loss of the module	typ. 2 W
Weight	approx. 190 g (6.7 oz.)

Digital Input Module 8 × 115 V AC **(6ES5 431–8MC11)**

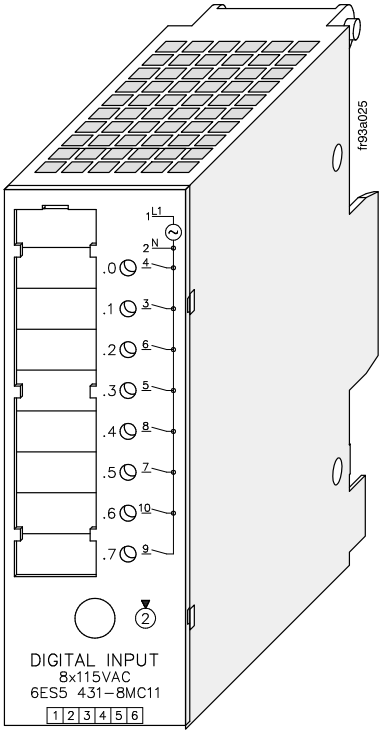

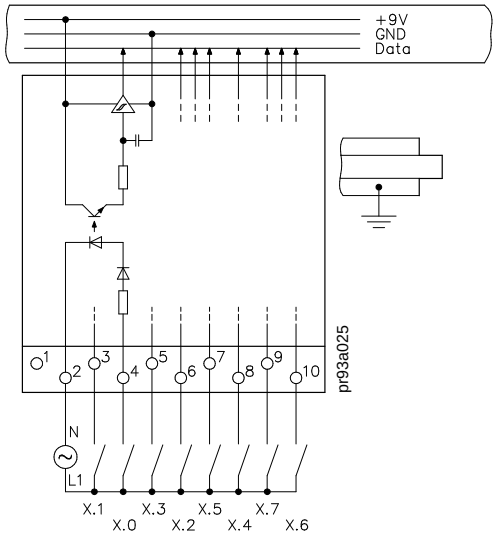

Technical Specifications	
Address identifier for ET 200U	
• DP Siemens	8DI or 009
• DP Standard	8DI or 016
Number of inputs	8
Galvanic isolation	yes (optocoupler)
• in groups of	8
Input voltage L1	
• rated value	115 V AC / DC
• for “0” signal	0 to 40 V
• for “1” signal	85 to 135 V
• frequency	47 to 63 Hz
Input current at “1” signal	typ. 12 mA at 115 V AC typ. 2.5 mA at 115 V DC
Inherent delay	
• from “0” to “1”	typ. 10 ms
• from “1” to “0”	typ. 20 ms

Length of cable	
• unshielded	max. 100 m (330 ft.)
Rated isolation voltage (+9 V to L1)	124 V AC
• isolation group	2 × B
• tested with	1250 V AC
Rated isolation voltage (+9 V to ⏚)	12 V AC
• isolation group	1 × B
• tested with	500 V AC
Connection of 2–wire BERO proximity switches	possible
• residual current	≤ 4 mA
Current consumption	
• from +9 V (CPU)	typ. 32 mA
Power loss of the module	typ. 2.5 W
Weight	approx. 260 g (9 oz.)

Digital Input Module 8 × 230 V AC **(6ES5 431–8MD11)**

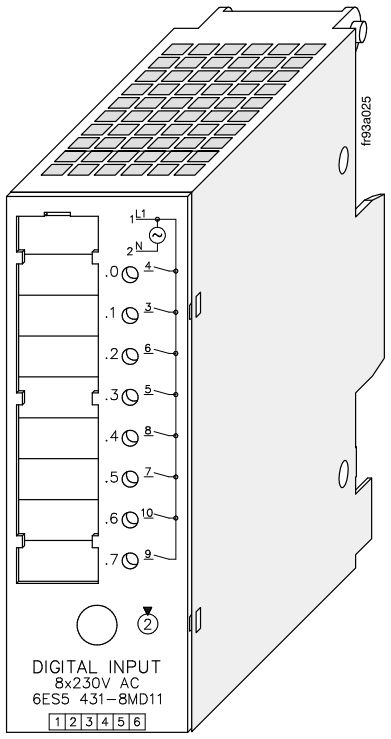

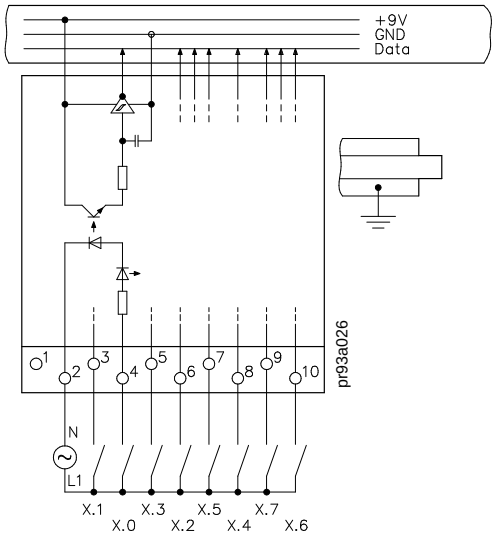

Technical Specifications	
Address identifier for ET 200U	
• DP Siemens	8DI or 009
• DP Standard	8DI or 016
Number of inputs	8
Galvanic isolation	yes (optocoupler)
• in groups of	8
Input voltage L1	
• rated value	230 V AC / DC
• for “0” signal	0 to 95 V
• for “1” signal	195 to 253 V
• frequency	47 to 63 Hz
Input current at “1” signal	typ. 16 mA at 230 V AC typ. 1.8 mA at 230 V DC
Inherent delay	
• from “0” to “1”	typ. 10 ms
• from “1” to “0”	typ. 20 ms

Length of cable	
• unshielded	max. 100 m (330 ft.)
Rated isolation voltage (+9 V to L1)	250 V AC
• isolation group	2 × B
• tested with	1500 V AC
Rated isolation voltage (+9 V to ⏚)	12 V AC
• isolation group	1 × B
• tested with	500 V AC
Connection of 2–wire BERO proximity switches	possible
• residual current	≤ 5 mA
Current consumption	
• from +9 V (CPU)	typ. 32 mA
Power loss of the module	typ. 3.6 W
Weight	approx. 260 g (9 oz.)

Digital Input Module 8 × 5 to 24 V DC **(6ES5 433–8MA11)**

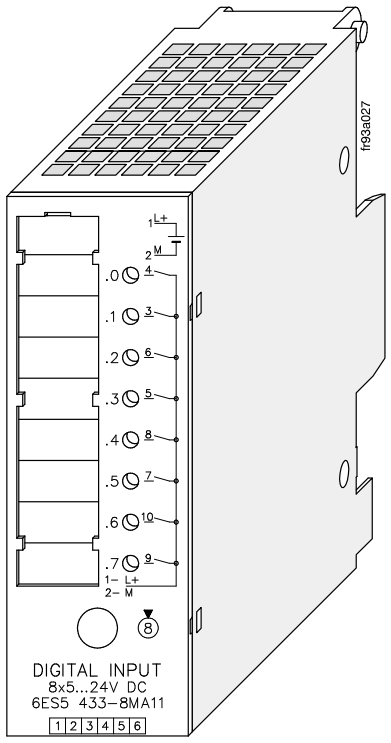

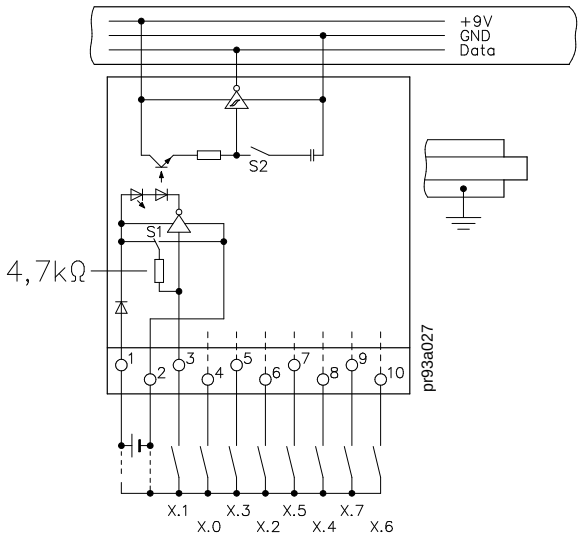

Technical Specifications	
Address identifier for ET 200U	
• DP Siemens	8DI or 009
• DP Standard	8DI or 016
Number of inputs	8
Galvanic isolation	yes (optocoupler)
• in groups of	8
Input voltage L+	
• rated value	5 to 24 V DC
• for “0” signal	V_{in} approx. 25 % L+
• for “1” signal	V_{in} approx. 45 % L+
Permissible range	4.5 to 30 V
Input resistance	4.7 kΩ to L+ or M reversible on the back of the module*
The LED displays the evaluated signal	
Inherent delay	approx. 1 ms or 10 ms reversible on the back of the module*

Length of cable	
• unshielded	max. 100 m (330 ft.)
Rated isolation voltage (+9 V to L+)	30 V AC
• isolation group	2 × B
• tested with	500 V AC
Rated isolation voltage (+9 V to ⏚)	12 V AC
• isolation group	2 × B
• tested with	500 V AC
Current consumption	
• from +9 V (CPU)	typ. 6 mA
• from L+	typ. 60 mA
Power loss of the module	typ. 2.4 W
Weight	approx. 225 g (8 oz.)
* reversible in groups of 8	

8.7 Digital Output Modules

Digital Output Module 4 × 24 V DC / 0.5 A **(6ES5 440–8MA11)**

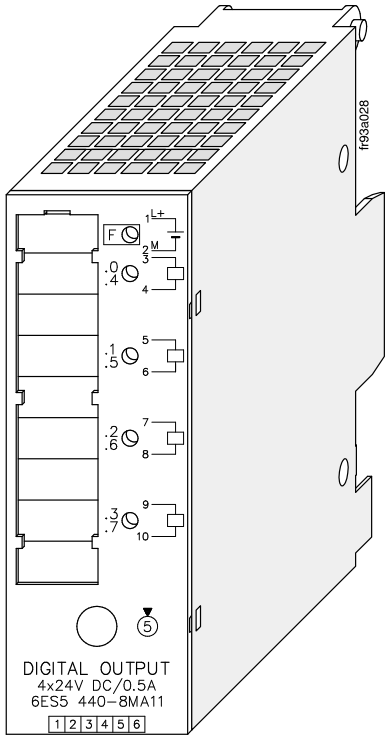

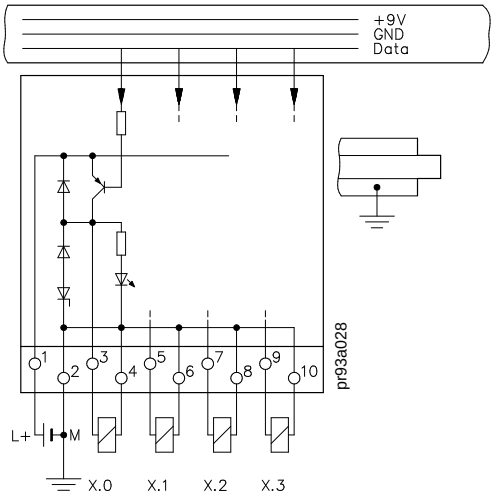

Technical Specifications	
Address identifier for ET 200U	
• DP Siemens	048
• DP Standard	8DQ or 032
Number of outputs	4
Galvanic isolation	no
• in groups of	4
Load voltage L+	
• rated value	24 V DC
• permissible range	20 to 30 V
• (including ripple)	
• value when t < 0.5 s	35 V
Output current for “1” signal	
• rated value	0.5 A
• permissible range	5 to 500 mA
• lamp load	max. 5 W
Residual current at “0” signal	max. 0.5 mA
Output voltage	
• at “1” signal	max. L+ (– 1.2 V)

Short–circuit protection	short–circuit protected output with autom switch on when the short–circuit does not exist any more
Fault LED (red)	short–circuit / no supply L+
Error diagnostics	possible
Voltage induced on circuit interruption (internal) limited to	–15 V
Switching frequency	
• resistive load	max. 100 Hz
• inductive load	max. 2 Hz
Total permissible current of outputs	2 A
Driving of digital input	possible

Parallleling of outputs	
• maximum current	possible 0.8 A
Length of cable	
• unshielded	max. 100 m (330 ft.)
Rated isolation voltage*	
(+9 V to ⏚)	12 V AC
• isolation group	1 × B

Current consumption	
• from +9 V (CPU)	typ. 15 mA
• from L+ (without load)	typ. 25 mA
Power loss of the module	typ. 3 W
Weight	approx. 200 g (7 oz.)

* Relevant only for ungrounded configuration in the ET 200U

Digital Output Module 4 × 24 V DC / 2 A **(6ES5 440–8MA21)**

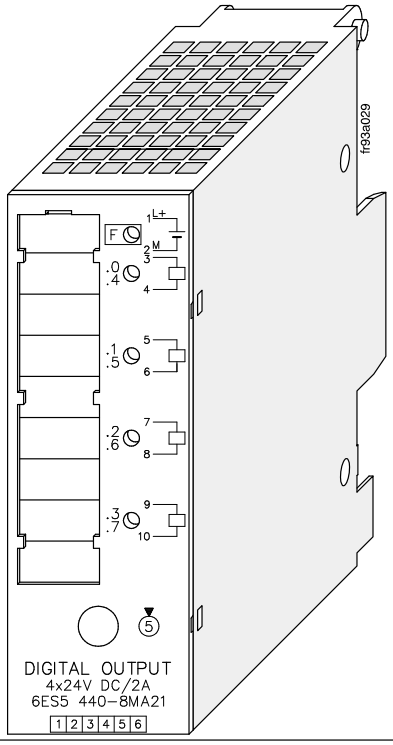

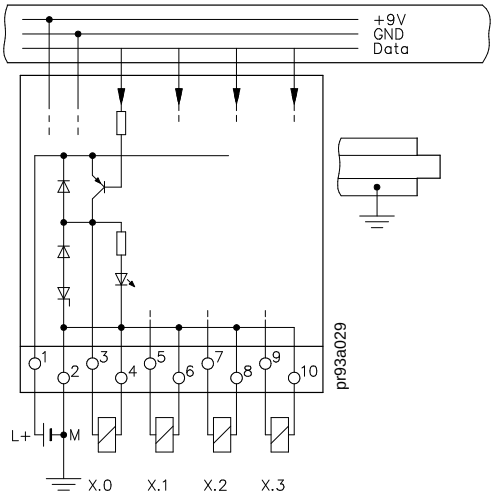

Technical Specifications	
Address identifier for ET 200U	
• DP Siemens	048
• DP Standard	8DQ or 032
Number of outputs	4
Galvanic isolation	no
• in groups of	4
Load voltage L+	
• rated value	24 V DC
• permissible range	20 to 30 V
• (including ripple)	
• value when t <0.5 s	35 V
Output current at “1” signal	
• rated value	2 A
• permissible range	5 mA to 2 A
• lamp load	max. 10 W
Residual current at “0” signal	max. 1 mA
Output voltage	
• at “1” signal	max. L+ (– 1.5 V)
Short–circuit protection	short–circuit protected output with automatic switch on when the short–circuit does not exist any more
Fault LED (red)	short–circuit / no supply L+

Error diagnostics	possible
Voltage induced on circuit interruption (internal) limited to	–15 V
Switching frequency	
• resistive load	max. 100 Hz
• inductive load	max. 2 Hz
Total permissible current of outputs	4 A
Driving of digital input	possible
Paralleling of outputs	possible
• maximum current	3.2 A
Length of cable	
•unshielded	max. 100 m (330 ft.)
Rated isolation voltage* (+9 V to ⏚)	12 V AC
•isolation group	1 × B
Current consumption	
• from +9 V (CPU)	typ. 15 mA
• from L+ (ohne Last)	typ. 25 mA
Power loss of the module	typ. 4.8 W
Weight	approx. 200 g (7 oz.)

* Relevant only for ungrounded configuration in the ET 200U

Digital Output Module 4 × 24 V DC / 0.5 A **(6ES5 441–8MA11)**

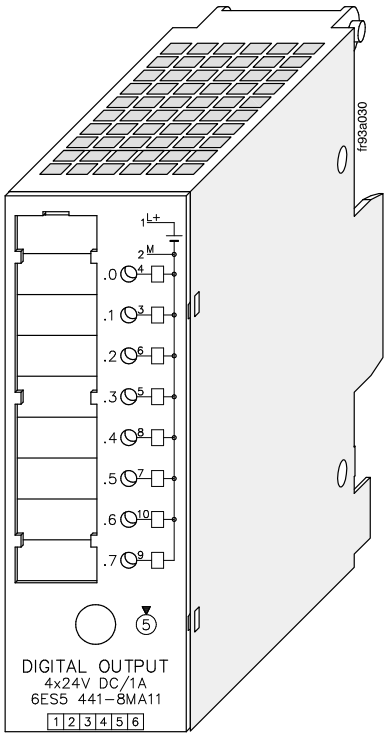

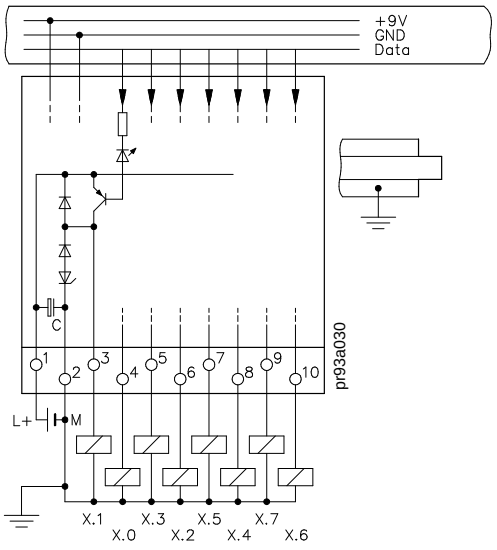

Technical Specifications

Address ID for ET 200U	
• DP Siemens	8DQ or 017
• DP Standard	8DQ or 032
Number of outputs	8
Galvanic isolation	no
• in groups of	8
Load voltage L+	
• rated value	24 V DC
• permissible range	20 to 30 V
• (including ripple)	
• value when t < 0.5 s	35 V
	Warning: Capacitor C remains loaded after switch off of L+
Output current for “1” signal	
• rated value	0.5 A at 60 °C / 1 A at 30 °C
• permissible range	5 mA to 1 A
• lamp load	max. 5 W
Resid. current at “0” signal	
Output voltage	max. 1 mA
• “1” signal	max. L+ (– 1.2 V)
Total permissible current of outputs	4 A

Short–circuit protection	none
Voltage induced on circuit interruption (internal) limited to	–15 V
Switching frequency	
• resistive load	max. 100 Hz
• inductive load	max. 2 Hz
Driving of digital input	possible
Paralleling of 2 outputs	possible
• maximum current	0.8 A
Length of cable	
• unshielded	max. 100 m (330 ft.)
Rated isolation voltage* (+9 V to ⏚)	12 V AC
• isolation group	1 × B
Current consumption	
• from +9 V (CPU)	typ. 14 mA
• from L+ (without load)	typ. 15 mA
Power loss of the module	typ. 3.5 W
Weight	approx. 220 g (7.7 oz.)

* Relevant only for ungrounded configuration in the ET 200U

Digital Output Module 4 × 24 to 60 V DC / 0.5 A **(6ES5 450–8MB11)**

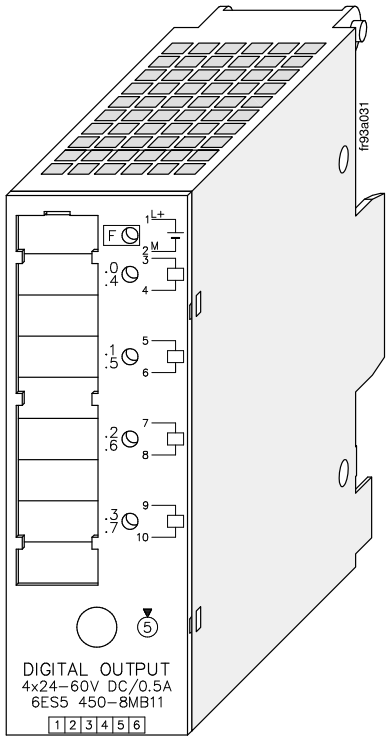

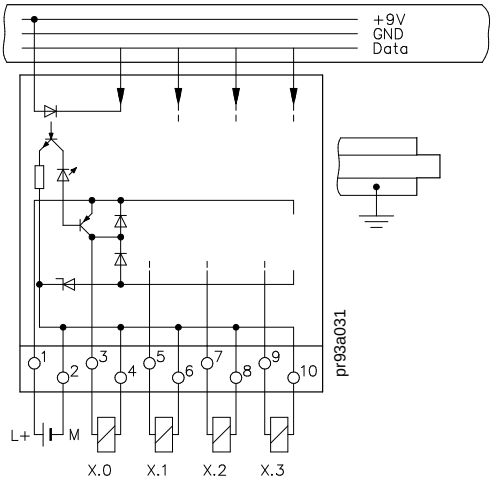

Technical Specifications	
Address identifier for ET 200U	
• DP Siemens	048
• DP Standard	8DQ or 032
Number of outputs	4
Galvanic isolation	yes (optocoupler)
• in groups of	4
Load voltage L+	
• rated value	24 to 60 V DC
• permissible range	20 to 72 V
Output current for “1” signal	
• rated value	0.5 A
• permissible range	5 mA to 0.5 A
• lamp load	max. 5 to 12 W
Residual current at “0” signal	max. 1 mA
Short–circuit protection	short–circuit protected output with automatic switch on when the short–circuit does not exist any more
Fault LED (red)	short circuit or no supply L+
Error diagnostics	possible
Voltage induced on circuit interruption (internal) limited to	–30 V

Switching frequency	
• resistive load	max. 100 Hz
• inductive load	max. 2 Hz
Total permissible current of outputs	2 A
Driving of digital input	possible
Paralleling of 2 outputs	possible
• maximum current	2 × 0.4 A
Length of cable	
• unshielded	max. 100 m (330 ft.)
Rated isolation voltage (+9 V to L+)	60 V AC
• isolation group	2 × B
• tested with	500 V AC
Rated isolation voltage (+9 V to ⏚)	12 V AC
• isolation group	1 × B
• tested with	500 V AC
Current consumption	
• from +9 V (CPU)	typ. 15 mA
• from L+ (without load)	typ. 30 mA (at 60 V)
Power loss of the module	typ. 5 W
Weight	approx. 200 g (7 oz.)

Digital Output Module 4 × 115 to 230 V AC / 1 A **(6ES5 450–8MD11)**

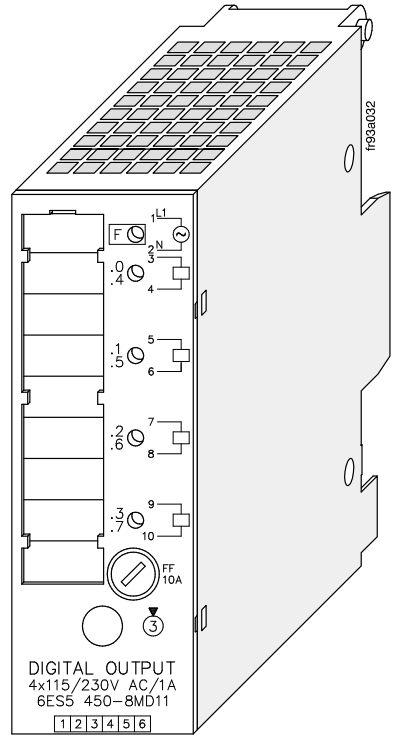

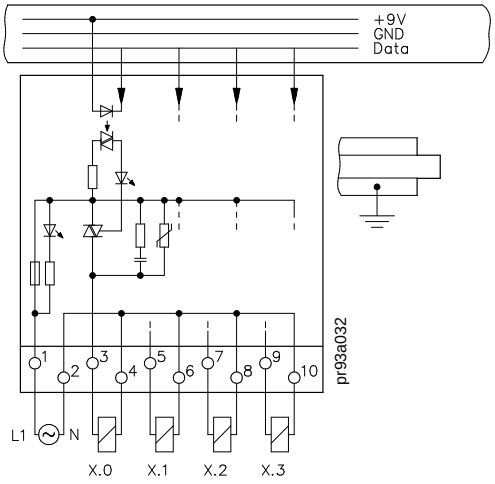

Technical Specifications	
Address identifier for ET 200U	
• DP Siemens	4DQ or 016
• DP Standard	8DQ or 032
Number of outputs	4
Galvanic isolation	yes
• in groups of	4
Load voltage L1	
• rated value	115 to 230 V AC
• frequency	max. 47 to 63 Hz
• permissible range	85 to 264 V
Output current for “1” signal	
• rated value	1 A
• permissible range	50 mA to 1 A
• lamp load	max. 25 / 50 W
Contact current closing rating	determined by the size of the fuse
Residual current at “0” signal	max. 3 / 5 mA
Output voltage	
• “1” signal	max. L1 (– 7 V)
Signal status display (green LEDs)	only with load connected
Short–circuit protection	fuse (10 A extra fast) (Wickman No. 19231/ 6ES5 980–3BC41)

Fault LED (red)	fuse blown*
Switching frequency	max. 10 Hz
Permissible current of all outputs	4 A
Driving of digital input	possible
Paralleling of outputs	not possible
Length of cable	
• unshielded	max. 100 m (330 ft.)
Rated isolation voltage	
(+9 V to L1)	250 V AC
• isolation group	2 × B
• tested with	1500 V AC
Rated isolation voltage	
(+9 V to ⏚)	12 V AC
• isolation group	1 × B
• tested with	500 V AC
Current consumption	
• from +9 V (CPU)	typ. 14 mA
Power loss of the module	typ. 3.5 W
Weight	approx. 315 g (11 oz.)

* Indication only given if load voltage is applied and at least one load is connected

Digital Output Module 8 × 24 V DC / 1 A **(6ES5 451–8MA11)**

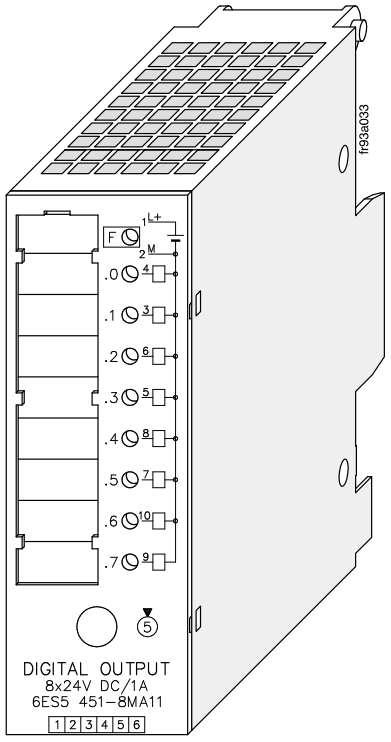

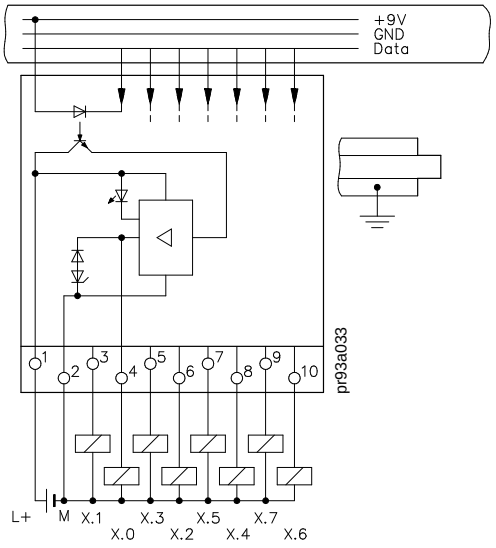

Technical Specifications	
Address identifier for ET 200U	
• DP Siemens	8DQ or 017
• DP Standard	8DQ or 032
Number of outputs	8
Galvanic isolation	yes (optocoupler)
• in groups of	8
Load voltage L+	
• rated value	24 V DC
• permissible range	max. 20 to 30 V
• (including ripple)	
• value when < 0.5 s	35 V
Output current for “1” signal	
• rated value	1 A
• permissible range	5 mA to 1 A
• lamp load	max. 10 W
Residual current at “0” signal	max. 0.5 mA
Output voltage	
• at “1” signal	max. L+ (– 0.6 V)
Short–circuit protection	short–circuit protected output with automatic switch on when the short–circuit does not exist any more
Voltage induced on circuit interruption (internal) limited to	–15 V

Switching frequency	
• resistive load	max. 100 Hz
• inductive load	max. 2 Hz
Permiss. current of all outputs	6 A
Driving of digital input	possible
Paralleling of 2 outputs	possible in pairs
• maximum current	1.8 A
Length of cable	
• unshielded	max. 100 m (330 ft.)
Rated isolation voltage	
(+9 V to L+)	24 V AC
• isolation group	2 × B
• tested with	500 V AC
Rated isolation voltage	
(+9 V to ⏚)	12 V AC
• isolation group	1 × B
• tested with	500 V AC
Current consumption	
• from +9 V (CPU)	typ. 35 mA
• from L+ (without load)	typ. 50 mA
Fault LED (red)	short–circuit
Power loss of the module	typ. 3 W
Weight	approx. 230 g

Digital Output Module 8 × 115 to 230 V AC / 0.5 A **(6ES5 451–8MD11)**

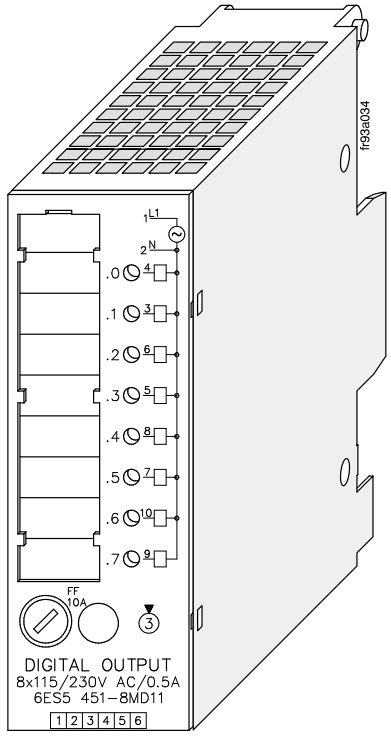

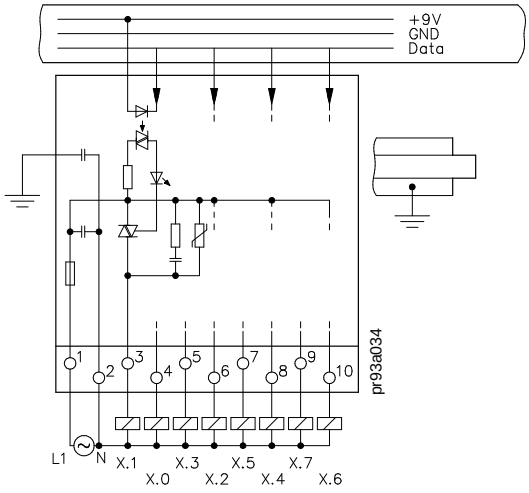

Technical Specifications	
Address identifier for ET 200U	
• DP Siemens	8DQ or 017
• DP Standard	8DQ or 032
Number of outputs	8
Galvanic isolation	yes (optocoupler)
• in groups of	8
Load voltage L1	
• rated value	115 to 230 V AC
• frequency	max. 47 to 63 Hz
• permissible range	85 to 264 V
Output current for “1” signal	
• rated value	0.5 A
• permissible range	50 mA to 0.5 A
• lamp load	max. 25 / 50 W
Contact current closing rating	determined by the size of the fuse
Residual current at “0” signal	max. 3 / 5 mA
Output voltage	
• at “1” signal	max. L1 (– 7 V)
Signal status display (green LEDs)	only with load connected

Short–circuit protection	fuse (10 A extra fast) (Wickmann No. 19231, 6ES5 980–3BC41)
Switching frequency	max. 10 Hz
Permissible current of all outputs	4 A
Driving of digital input	possible
Paralleling of outputs	not possible
Length of cable	
• unshielded	max. 100 m (330 ft.)
Rated isolation voltage (+9 V to L1)	250 V AC
• isolation group	2 × B
• tested with	1500 V AC
Rated isolation voltage (+9 V to ⏚)	12 V AC
• isolation group	1 × B
• tested with	500 V AC
Current consumption	
• from +9 V (CPU)	typ. 25 mA
Power loss of the module	typ. 3.5 W
Weight	approx. 270 g (9 oz.)

Digital Output Module 8 × 5 to 24 V DC / 0.1 A **(6ES5 453–8MA11)**

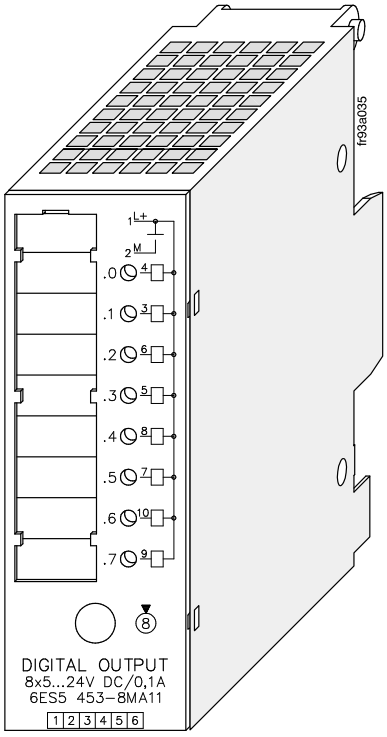

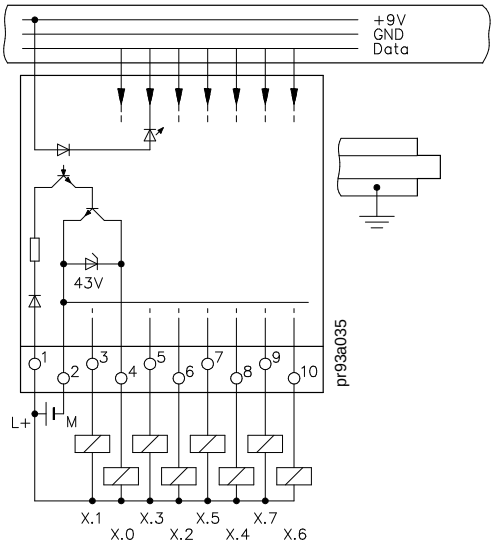

Technical Specifications	
Address identifier for ET 200U	
• DP Siemens	8DQ or 017
• DP Standard	8DQ or 032
Number of outputs	8
Galvanic isolation	yes
• in groups of	8
Load voltage L+	
• rated value	5 to 24 V DC
• permissible range	4.75 to 30 V
• (including ripple)	
• value when t < 0.5 s	35 V
Output voltage	TTL–compatible*
Output current for “1” signal	
• rated value	100 mA
Short–circuit protection	none
Voltage induced on circuit interruption (internal) limited to	–19 V (at 24 V)

Paralleling of 2 outputs	possible in pairs
Max. current	0.8 x I_{rated}
Switching frequency	
• resistive load	max. 100 Hz
• inductive load	max. 2 Hz
Length of cable	
• unshielded	max. 100 m (330 ft.)
Rated isolation voltage (+9 V to ⏚)	12 V AC
• isolation group	1 × B
• tested with	500 V AC
Current consumption	
• from +9 V (CPU)	typ. 20 mA
• from L+ (without load)	typ. 28 mA
Power loss of the module	typ. 1 W
Weight	approx. 220 g (8 oz.)

* transistor with open collector, switching to M potential

Relay Output Module 8 × 30 V DC / 230 V AC **(6ES5 451–8MR12)**
Crimp Snap–In Connector, 40–Pin **(6ES5 490–8MA12)**
Screw Plug Connector, 20–Pin **(6ES5 490–8MB21)**
Screw Plug Connector, 40–Pin **(6ES5 490–8MB11)**

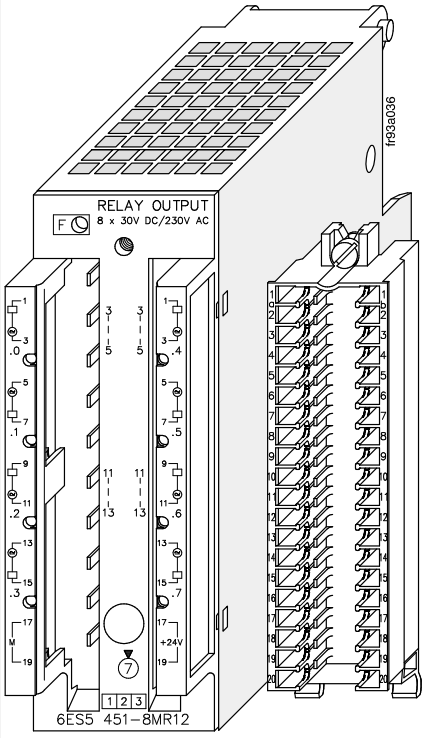

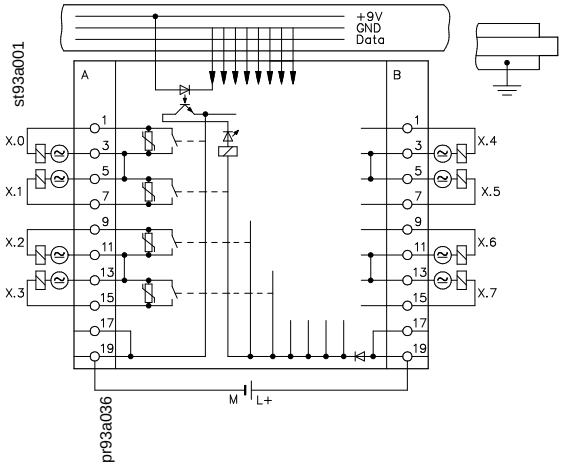

Technical Specifications	
Address identifier for ET 200U	
• DP Siemens	8DQ or 017
• DP Standard	8DQ or 032
Outputs	8 relay outputs, contact switching varistor SIOV–S07–K275
Galvanic isolation	yes
• in groups of	2 with signal status display
Continuous current I_{th}	3 A
Relay type	Dold OW 5699
Switching capacity of the contacts	
• resistive load	max. 3 A at 250 V AC 1.5 A at 30 V DC
• inductive load	max. 0.5 AC at 250 V AC 0.5 A at 30 V DC
Operating cycles of the contacts according to VDE 0660, part 200	
• AC–11	1×10^6
• DC–11	0.5×10^6
Switching frequency	max. 10 Hz
Fault LED (red)	no input voltage

Length of cable	
• unshielded	max. 100 m (330 ft.)
Rated isolation voltage (+9 V to L1)	250 V AC
• isolation group	2 × B
• tested with	1500 V AC
Rated isolation voltage (+9 V to ⏚)	12 V AC
• isolation group	1 × B
• tested with	500 V AC
Rated isolation voltage (between contacts)	250 V AC
• isolation group	2 × B
• tested with	1500 V AC
Supply voltage L+ (for the relay)	
• rated value	24 V DC
• ripple V_{pp}	max. 3.6 V
• permissible range	
• (ripple included)	20 to 30 V
• value when t < 0.5 s	35 V
Current consumption	
• from +9 V (CPU)	typ. 30 mA
• from L+	typ. 70 mA
Power loss of the module	typ. 1.6 W
Weight	approx. 300 g (11 oz.)

Relay Output Module 4 × 30 V DC / 230 V AC **(6ES5 452–8MR11)**

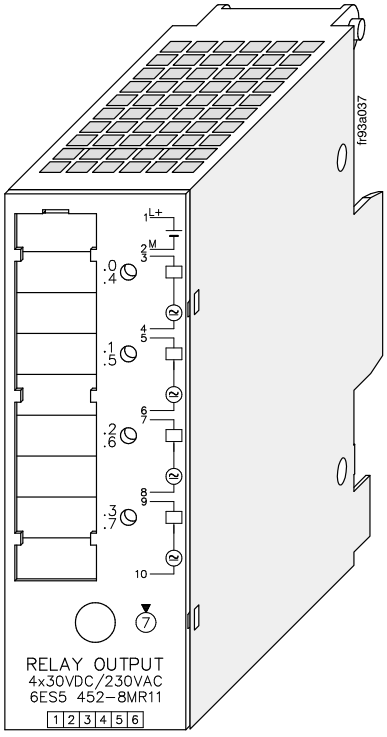

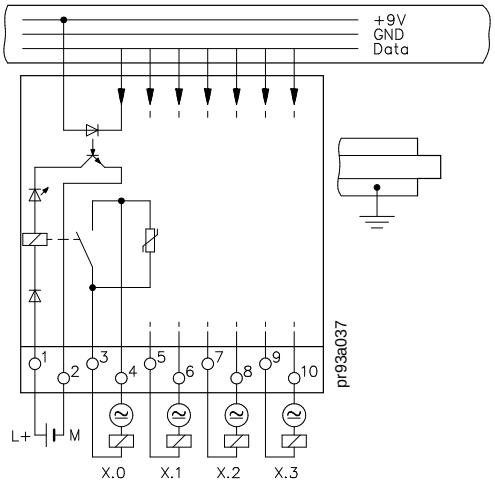

Technical Specifications	
Address identifier for ET 200U	
• DP Siemens	4DQ or 016
• DP Standard	8DQ or 032
Outputs	4 relay outputs, contact switching varistor SIOV–S07–K275
Galvanic isolation	yes (optocoupler)
• in groups of	1
Continuous current I_{th}	5 A
Relay type	Siemens V 23127–D 0006–A 402
Switching capacity of the contacts	
• resistive load	max. 5 A at 250 V AC max. 2.5 A at 30 V DC
• inductive load	1.5 A at 250 V AC 0.5 A at 30 V DC
Operating cycle of the contacts according to VDE 0660, part 200	
• AC–11	1.5×10^6
• DC–11	0.5×10^6
Switching frequency	max. 10 Hz
Length of cable	
• unshielded	max. 100 m (330 ft.)
Rated isolation voltage (+9 V to L1)	250 V AC
• isolation group	2 × B
• tested with	1500 V AC
Rated isolation voltage (+9 V to ⏚)	12 V AC
• isolation group	1 × B
• tested with	500 V AC
Rated isolation voltage (between contacts)	250 V AC
• isolation group	2 × B
• tested with	1500 V AC
Supply voltage L+ (for the relays)	
• rated value	24 V DC
• ripple V_{pp}	max. 3.6 V
• permissible range	
• (ripple included)	20 to 30 V
• value when t < 0.5 s	35 V
Current consumption	
• from +9 V (CPU)	typ. 14 mA
• from L+	typ. 100 mA
Power loss of the module	typ. 2 W
Weight	approx. 240 g (8 oz.)

8.8 Digital Input / Output Modules

Digital Input / Output Module with LED Display **(6ES5 482–8MA13)**
Crimp Snap–In Connector, 40–Pin **(6ES5 490–8MA02)**
Screw Plug Connector, 40–Pin **(6ES5 490–8MB11)**

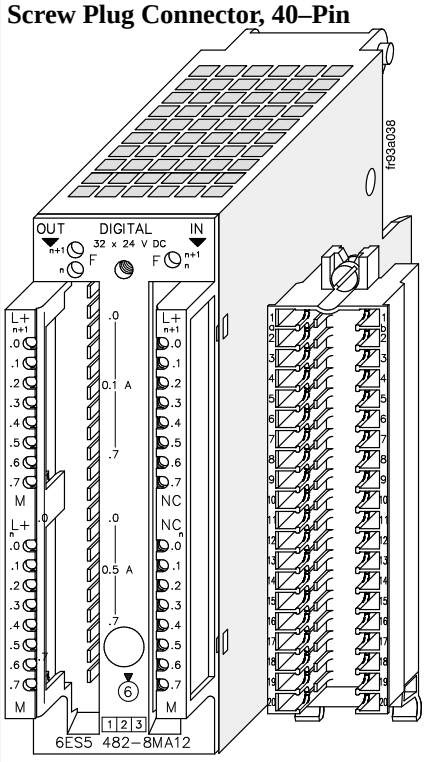

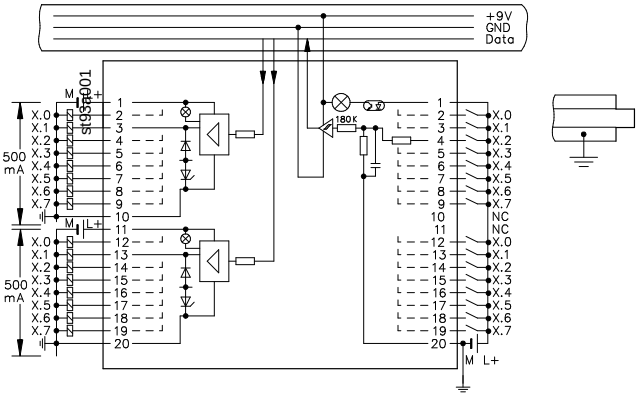

pr93a038

Technical Specifications	
Address identifier for ET 200U	
• DP Siemens	027
• DP Standard	049 or 112
Length of cable	
• unshielded	100 m (330 ft.)
Rated isolation voltage (+9 V to ⏚)	12 V AC
• isolation group	1 × B
Power loss of the module	typ. 4.5 W
Weight	approx. 190 g (7 oz.)

Input side	
Number of inputs	16
Galvanic isolation	no
• in groups of	16
Input voltage L+	
• rated value	24 V DC
• for “0” signal	0 to 5 V
• for “1” signal	13 to 30 V
Input current with “1” signal	typ. 4.5 mA
Inherent delay	
• from “0” to “1”	typ. 4 ms
• from “1” to “0”	typ. 3 ms
Fault LED (red)	indicates interruption of L + / M supply
Connection of two–wire BERO proximity switches	possible
•residual current	≤ 1.5 mA
Current consumption	
• from +9 V (CPU)	typ. 50 mA

Output side	
Number of outputs	16
Galvanic isolation	no
• in groups of	8
Output current I_{rated} with “1” signal	
• rated value	100 mA
• permissible range	5 to 500 mA
Residual current with “0” signal	max. 0.5 mA
Short–circuit protection	yes
Short–circuit indication	red LED
Current consumption	
• from +9 V (CPU)	typ. 10 mA
• from L+ (without load)	typ 100 mA
Lamp load	max. 5 W
Load voltage L+	
• rated value	24 V DC
• permissible range	20 to 30 V
• (ripple included)	
• value when t < 0.5 s	35 V
Output voltage	
• with“1” signal	L+ (– 0.8 V)
Switching frequency with	
• resistive load	100 Hz
• inductive load	2 Hz
Voltage induced on circuit interruption (internal) limited to	–15 V
Permissible total current of the outputs	6 A
Driving of a digital input	possible
Paralleling of outputs	possible in pairs
• maximum current	$(0.8 \times I_{rated})$

8.9 Analog Input Modules

Analog Input Modules 4 × ±50 mV **(6ES5 464–8MA11)**

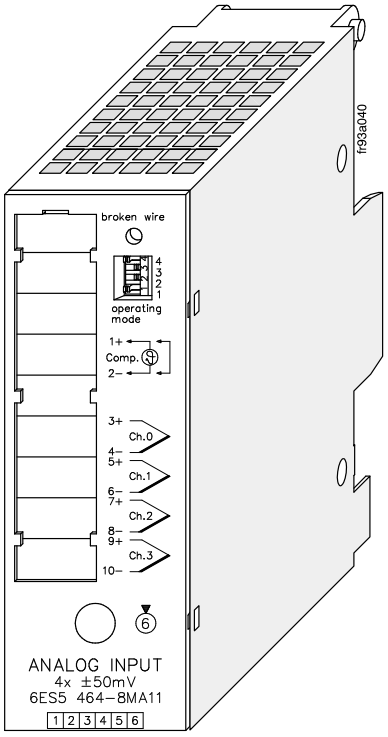

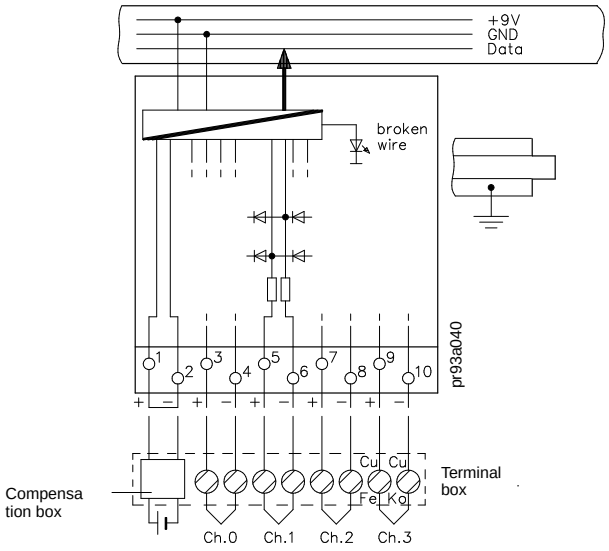

Technical Specifications	
Address identifier for ET 200U	
• DP Siemens	4AI or 015 2AI or 013 1AI or 012
• DP Standard	4AI or 083 2AI or 081 1AI or 080
Input ranges (rated value)	± 50 mV
Number of inputs	1, 2 or 4 (selectable)
Galvanic isolation	yes (inputs to grounding point; not between inputs)
Input resistance	≥ 10 MΩ
Connection method of sensors	two–wire connection
Digital representation of input signal	12 bits + sign (2048 units = rated value)
Measured value representation	two's complement (left–justified)
Measuring principle	integrating
Conversion principle	voltage–time conversion (dual slope)
Integration time (adjustable for optimum noise suppression)	20 ms at 50 Hz 16.6 ms at 60 Hz
Encoding time per input	
• for 2048 units	max. 60 ms at 50 Hz max. 50 ms at 60 Hz
• for 4095 units	max. 80 ms at 50 Hz max. 66.6 ms at 60 Hz
Permissible voltage difference	
• between inputs	max. ± 1 V
• between inputs and central ground point	max. 75 V DC / 60 V AC
Permissible input voltage (destruction limit)	max. 24 V DC
Fault indication for	
• range exceeded	yes (more than 4095 units)
• sensor wire break	yes (selectable)
• general indication of wire break	red LED

Noise suppression for f = nx (50 / 60 Hz ± 1 %); n = 1, 2, ...	
• Common–mode rejection (V_{pp} = 1 V)	min. 86 dB
• series–mode rejection (peak value of noise < rated value of input range)	min. 40 dB
Basic error limits (operational error limit at 25 °C, referred to input ranges of module)	± 0.15 %
Operational error limits (0 to 60 °C, referred to input ranges of module)	± 0.4 %
Single errors	
• linearity	± 0.05 %
• tolerance	± 0.05 %
• polarity reversal error	± 0.05 %
Temperature error	
• final value	± 0.01 % /K
• zero point	± 0.002 % /K
Length of cable	
• shielded	max. 50 m (164 ft.)
Supply voltage L+	none
Connection of compensating box	possible
Rated isolation voltage (+9 V to ⏚)	12 V AC
• isolation group	1 × B
• tested with	500 V AC
Rated isolation voltage (inputs to +9 V)	60 V AC
• isolation group	1 × B
• tested with	500 V AC
Current consumption	
• from +9 V (CPU)	typ. 70 mA
Power loss of the module	typ. 0.7 W
Weight	approx. 230 g (8 oz.)

Analog Input Module 4 × ±50 mV **(6ES5 464–8MA21)**

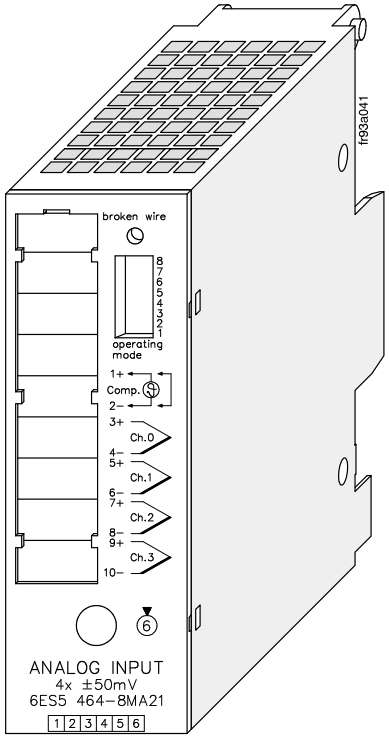

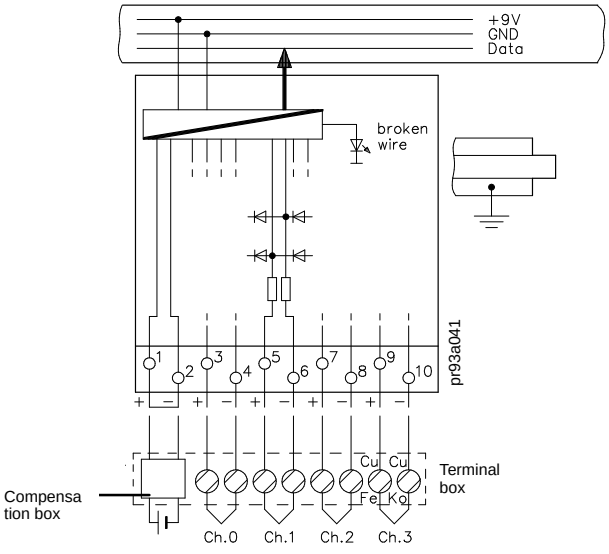

Technical Specifications	
Address identifier for ET 200U	
• DP Siemens	4AI or 015 2AI or 013 1AI or 012
• DP Standard	4AI or 083 2AI or 081 1AI or 080
Input range (rated value)	±50 mV
Number of inputs	1, 2 or 4 (selectable)
Galvanic isolation	yes (inputs to ground–ing point; not between inputs)
Input resistance	≥10 MΩ
Connection method of sensors	two–wire connection
Digital representation of input signal	12 bits + sign (2048 units = rated value)
Measured value representation	two's complement (left–justified)

Measuring principle	integrating
Conversion principle	voltage–time conversion (dual slope)
Integration time (adjustable for optimum noise suppression)	20 ms at 50 Hz 16.6 ms at 60 Hz
Encoding time per input	
• for 2048 units	max. 60 ms at 50 Hz max. 50 ms at 60 Hz
• for 4095 units	max. 80 ms at 50 Hz max. 66.6 ms at 60 Hz
Permissible voltage difference	
• between inputs	± 1 V
• between inputs and central ground point	max. 75 V DC / 60 V AC
Permissible input voltage (destruction limit)	max. 24 V DC

Fault indication for	
• range exceeded	yes
•	(more than 4095 units)
• sensor wire break	yes (selectable)
• general indication of wire break	red LED
Noise suppression for f = nx (50 / 60 Hz ± 1 %); n = 1, 2, ...	
• common–mode rejection (V_{pp} = 1)	min. 86 dB
• series–mode rejection	
• (peak value of noise < rated value of input range)	min. 40 dB
Basic error limits (operational error limit at 25 °C, referred to input ranges of module)	± 0.15 %
Operational error limits (0 to 60 °C, referred to input ranges of module)	± 0.4 %
Single errors	
• linearity	± 0.05 %
• tolerance	± 0.05 %
• polarity reversal error	± 0.05 %
Temperature error	
• final value	± 0.01 %/K
• zero point	± 0.002 %/K

Linearization exactness for rated range (for types J, K, L)	± 1 °C
Characteristic linearization for the following thermoelements	
• Nickel–Chromium /	
• Nickel–Aluminium (Type K)	IEC 584
• Iron/Copper–Nickel (Type J)	IEC 584
• Iron/Copper–Nickel (Type L)	DIN 43710
Length of cable	
• shielded	max. 50 m (164 ft.)
Supply voltage L+	none
Connection of compensating box	possible
Rated isolation voltage (+9 V to ⏚)	12 V AC
• isolation group	1 × B
• tested with	500 V AC
Rated isolation voltage (inputs to +9 V)	60 V AC
• isolation group	1 × B
• tested with	500 V AC
Current consumption	
• from +9 V (CPU)	typ. 100 mA
Power loss of the module	typ. 0.7 W
Weight	approx. 230 g (8 oz.)

Analog Input Module 4 × ±1 V **(6ES5 464–8MB11)**

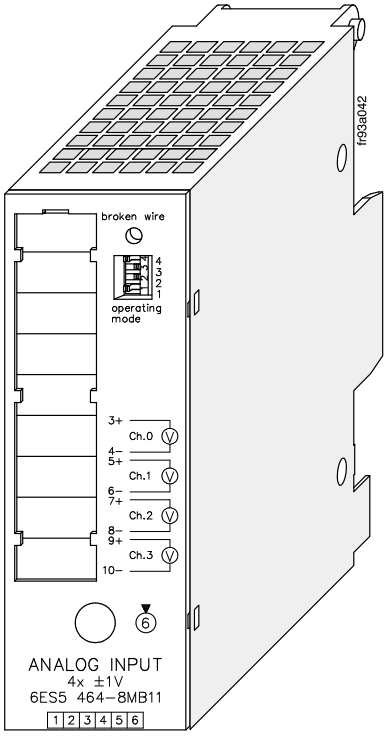

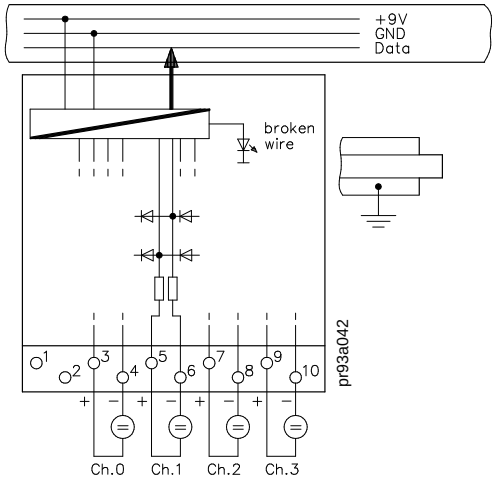

Technical Specifications	
Address ID for ET 200U	
• DP Siemens	4AI or 015 2AI or 013 1AI or 012
• DP Standard	4AI or 083 2AI or 081 1AI or 080
Input ranges (rated value)	± 1 V
Number of inputs	1, 2 or 4 (selectable)
Galvanic isolation	yes (inputs to grounding point; not between inputs)
Input resistance	≥ 10 MΩ
Connection method of sensors	two–wire connection
Digital representation of input signal	12 bits + sign (2048 units = rated value)
Measured value representation of input signal	two's complement (left–justified)
Measuring principle	integrating
Conversion principle	voltage–time conversion (dual slope)
Integration time (adjustable for optimum noise suppression)	20 ms at 50 Hz 16.6 ms at 60 Hz
Encoding time per input	
• for 2048 units	max. 60 ms at 50 Hz max. 50 ms at 60 Hz
• for 4095 units	max. 80 ms at 50 Hz max. 66.6 ms at 60 Hz
Permissible voltage difference	
• between inputs	max. ± 1 V
• between inputs and central grounding point	max. 75 V DC / 60 V AC
Permissible input voltage (destruction limit)	max. 24 V DC
Fault indication for	
• range exceeded	yes (more than 4095 units)
• sensor wire break	yes (selectable)
• general indication of wire break	red LED

Noise suppression for f = nx (50 / 60 Hz ± 1 %); n = 1, 2, ...	
• common–mode rejection	
• (V_{pp} = 1 V)	min 86 dB
• series–mode rejection (peak value of noise < rated value of input range)	min. 40 dB
Basic error limits (operational error limit at 25 °C, referred to input ranges of module)	0.1 %
Operational error limits (0 to 60 °C, referred to input ranges of module)	± 0.35 %
Single errors	
• linearity	± 0.05 %
• tolerance	± 0.05 %
• polarity reversal error	± 0.05 %
Temperature error	
• final value	± 0.01 %/K
• zero point	± 0.002 %/K
Length of cable	
• shielded	max. 200 m (660 ft.)
Supply voltage L+	none
Temperature compensation, internally	possible
Connection of compensating box	not possible
Rated isolation voltage (+9 V to ⏚)	12 V AC
• isolation group	1 × B
• tested with	500 V AC
Rated isolation voltage (inputs to +9 V)	60 V AC
• isolation group	1 × B
• tested with	500 V AC
Current consumption	
• from +9 V (CPU)	typ. 70 mA
Power loss of the module	typ. 0.7 W
Weight	approx. 230 g (8 oz.)

Analog Input Module 4 × ±10 V **(6ES5 464–8MC11)**

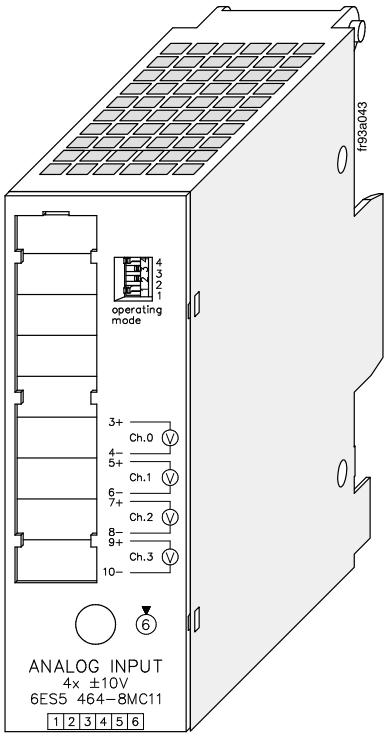

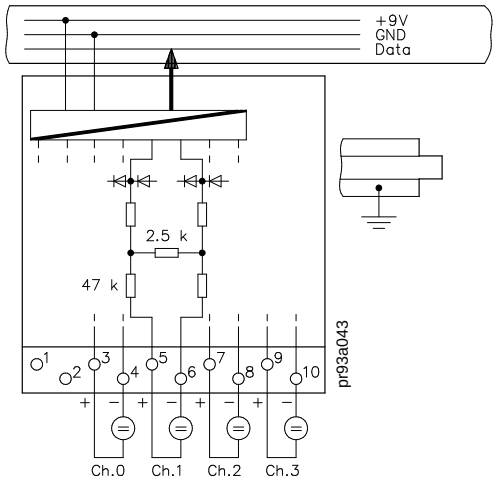

Technical Specifications	
Address ID for ET 200U	
• DP Siemens	4AI or 015 2AI or 013 1AI or 012
• DP Standard	4AI or 083 2AI or 081 1AI or 080
Input ranges (rated values)	± 10 V
Number of inputs	1, 2 or 4 (selectable)
Galvanic isolation	yes (inputs to grounding point; not between inputs)
Input resistance	≥ 50 kΩ
Connection method of sensors	two–wire connection
Digital representation of input signal	12 bits + sign (2048 units = rated value)
Measured value representation	two's complement (left–justified)
Measuring principle	integrating
Conversion principle	voltage–time conversion (dual slope)
Integration time (adjustable for optimum noise suppression)	20 ms at 50 Hz 16.6 ms at 60 Hz
Encoding time per input	
• for 2048 units	max. 60 ms at 50 Hz max. 50 ms at 60 Hz
• for 4095 units	max. 80 ms at 50 Hz max. 66.6 ms at 60 Hz
Permissible voltage difference	
• between inputs	max. ± 1 V
• between inputs and central ground point	max. 75 V DC / 60 V AC
Permissible input voltage (destruction limit)	max. 50 V DC
Fault indication for	
• range exceeded	yes (more than 4095 units)
• sensor wire break	no
• general indication of wire break	no

Noise suppression for f = nx (50/60 Hz ± 1 %); n = 1, 2, ...	
• common–mode rejection (V_{pp} = 1 V)	min. 86 dB
• series–mode rejection	
• (peak value of noise < rated value of input range)	min. 40 dB
Basic error limits (operational error limit at 25 °C, referred to input ranges of module)	± 0.2 %
Operational error limits (0 to 60 °C, referred to input ranges of module)	± 0.45 %
Single errors	
• linearity	± 0.05 %
• tolerance	± 0.05 %
• polarity reversal error	± 0.05 %
Temperature error	
• final value	± 0.01 %/K
• zero point	± 0.002 %/K
Length of cable	
• shielded	max. 200 m (660 ft.)
Supply voltage L+	none
Connection of compensating box	not possible
Rated isolation voltage (+9 V to ⏚)	12 V AC
• isolation group	1 × B
• tested with	500 V AC
Rated isolation voltage (inputs to +9 V)	60 V AC
• isolation group	1 × B
• tested with	500 V AC
Current consumption	
• from +9 V (CPU)	typ. 70 mA
Power loss of the module	typ. 0.7 W
Weight	approx. 230 g (8 oz.)

Analog Input Module 4 × ±20 mA **(6ES5 464–8MD11)**

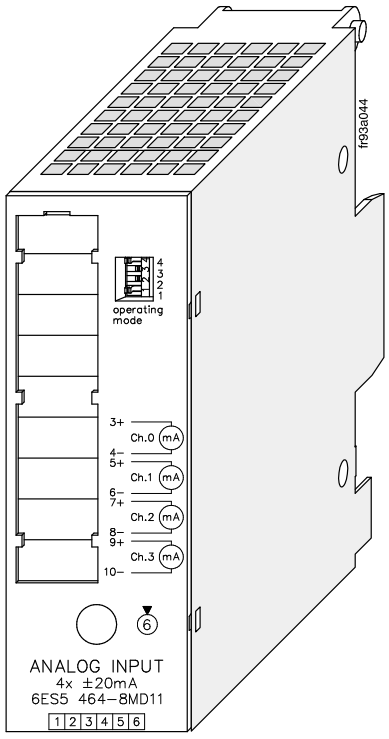

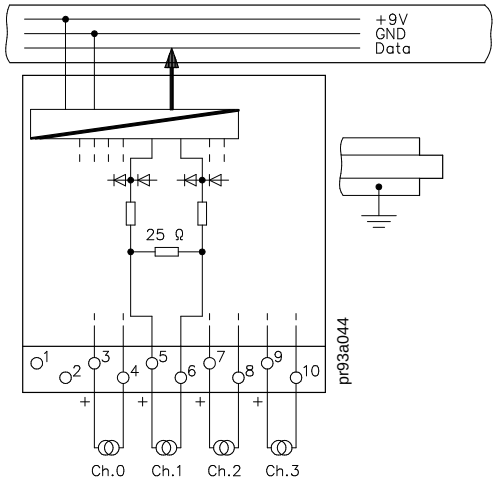

Technical Specifications	
Address ID for ET 200U	
• DP Siemens	4AI or 015 2AI or 013 1AI or 012
• DP Standard	4AI or 083 2AI or 081 1AI or 080
Input ranges (rated values)	± 20 mA
Number of inputs	1, 2 or 4 (selectable)
Galvanic isolation	yes (inputs to grounding point; not between inputs)
Input resistance	≥ 25 Ω
Connection method of sensors	two–wire connection
Digital representation of input signal	12 bits + sign (2048 units = rated value)
Measured value representation	two's complement (left–justified)
Measuring principle	integrating
Conversion principle	voltage–time conversion (dual slope)
Integration time (adjustable for optimum noise suppression)	20 ms at 50 Hz 16.6 ms at 60 Hz
Encoding time per input	
• for 2048 units	max. 60 ms at 50 Hz max. 50 ms at 60 Hz
• for 4095 units	max. 80 ms at 50 Hz max. 66.6 ms at 60 Hz
Permissible voltage difference	
• between inputs	max. ± 1 V
• between inputs and central ground point	max. 75 V DC / 60 V AC
Permissible input current (destruction limit)	max. 80 mA
Fault indication for	
• range exceeded	yes (more than 4095 units)
• sensor wire break	no
• general indication of wire break	no

Noise suppression for f = nx (50 / 60 Hz ± 1 %); n = 1, 2, ...	
• common–mode rejection (V_{pp} = 1 V)	min. 86 dB
• series–mode rejection	
• (peak value of noise < rated value of input range)	min. 40 dB
Basic error limits (operational error limit at 25 °C, referred to input ranges of module)	± 0.2 %
Operational error limits (0 to 60 °C, referred to input ranges of module)	± 0.45 %
Single errors	
• linearity	± 0.05 %
• tolerance	± 0.05 %
• polarity reversal error	± 0.05 %
Temperature error	
• final value	± 0.01 %/K
• zero point	± 0.002 %/K
Length of cable	
• shielded	max. 200 m (660 ft.)
Supply voltage L+	none
Connection of compensating box	not possible
Rated isolation voltage (+9 V to ⏚)	12 V AC
• isolation group	1 × B
• tested with	500 V AC
Rated isolation voltage (inputs to +9 V)	60 V AC
• isolation group	1 × B
• tested with	500 V AC
Current consumption	
• from +9 V (CPU)	typ. 70 mA
Power loss of the module	typ. 0.7 W
Weight	approx. 230 g (8 oz.)

Analog Input Modue 4 × ±4 to 20 mA **(6ES5 464–8ME11)**

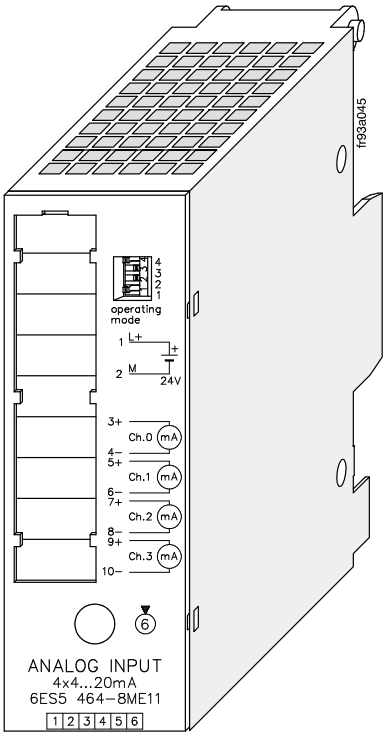

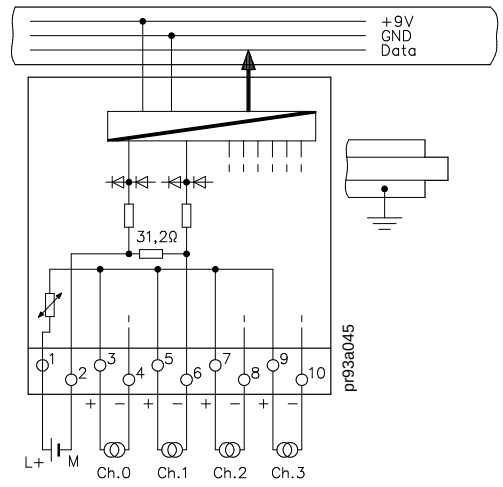

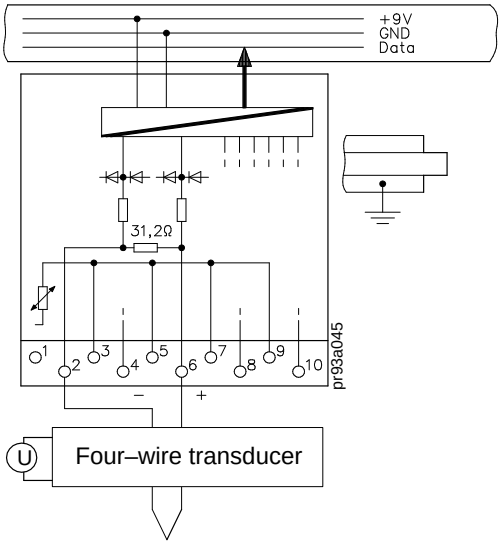

Technical Specifications	
Address ID for ET 200U	
• DP Siemens	4AI or 015 2AI or 013 1AI or 012
• DP Standard	4AI or 083 2AI or 081 1AI or 080
Input ranges (rated values)	± 4 to 20 mA
Number of inputs	1, 2 or 4 (selectable)
Galvanic isolation	yes (inputs to grounding point; not between inputs)
Input resistance	≥ 31.25 Ω
Connection method of sensors	two–wire connection for 2–/4–wire transducers
Digital representation of input signal	12 bits + sign (2048 units = rated value)
Measured value representation	two's complement (left–justified)
Measuring principle	integrating
Conversion principle	voltage time conversion (dual slope)
Integration time (adjustable for optimum noise suppression)	20 ms at 50 Hz 16.6 ms at 60 Hz
Encoding time per input	
• for 2048 units	max. 60 ms at 50 Hz max. 50 ms at 60 Hz
• for 4095 units	max. 80 ms at 50 Hz max. 66.6 ms at 60 Hz
Permissible voltage difference	
• between inputs	max. ± 1 V
• between inputs and central ground point	max. 75 V DC / 60 V AC
Permissible input current (destruction limit)	max. 80 mA
Fault indication for	
• range exceeded	yes (more than 4095 units)
• sensor wire break	no
• general indication of wire break	no

Noise suppression for f = nx (50 / 60 Hz ± 1 %); n = 1, 2, ...	
• common–mode rejection (V_{pp} = 1 V)	min. 86 dB
• series–mode rejection	min. 40 dB
• (peak value of noise < rated value of input range)	
Basic error limits (operational error limit at 25 °C, referred to input ranges of module)	± 0.15 %
Operational error limits (0 to 60 °C, referred to input ranges of module)	± 0.4 %
Single errors	
• linearity	± 0.05 %
• tolerance	± 0.05 %
• polarity reversal	± 0.05 %
Temperature error	
• final value	± 0.01 %/K
• zero point	± 0.002 %/K
Length of cable	
• shielded	max. 200 m (660 ft.)
Supply voltage L+ for 2–wire transducers	
• rated value	24 V DC
• ripple V_{pp}	3.6 V
• permissible range	20 to 30 V
Connection of compensating box	not possible
Rated isolation voltage (+9 V to ⏚)	12 V AC
• isolation group	1 × B
• tested with	500 V AC
Rated isolation voltage (inputs to +9 V)	60 V AC
• isolation group	1 × B
• tested with	500 V AC
Current consumption	
• from +9 V (CPU)	typ. 70 mA
• from L+	typ. 80 mA
Power loss of the module	
• for 2–wire transducers	typ. 1.0 W
• for 4–wire transducers	typ. 0.7 W
Weight	approx. 230 g (8 oz.)

Analog Input Module 2 × PT 100 / ± 500 mV **(6ES5 464–8MF11)**

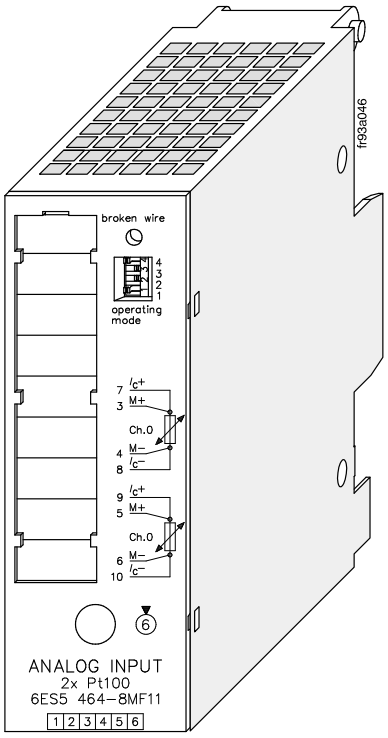

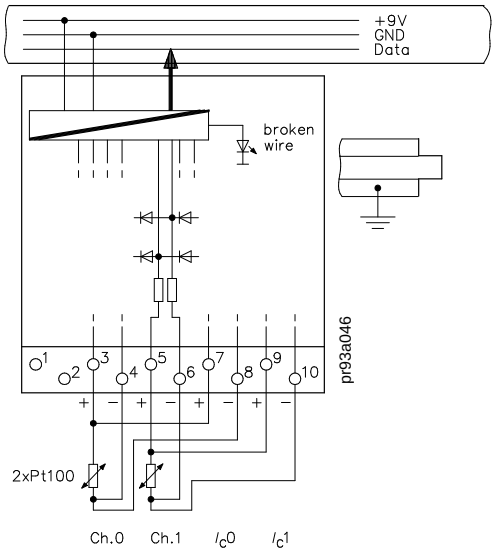

Technical Specifications	
Address ID for ET 200U	
• DP Siemens	2AI or 013 1AI or 012
• DP Standard	2AI or 081 1AI or 080
Input range (rated values)	
• resistance sensor (PT 100)	0 to 200 Ω (max. 400 Ω)
• voltage sources	± 500 mV
Number of inputs	1 or 2 (selectable)
Galvanic isolation	yes (inputs to ground–ing point; not between inputs)
Input resistance	≥ 10 MΩ
Connection method of sensors	two or four–wire connection
Digital representation of input signal	12 bits + sign (2048 units = rated value)
Measured value representation	two's complement (left–justified)

Measuring principle	integrating
Conversion principle	voltage–time conversion (dual slope)
Integration time (adjustable for optimum noise suppression)	20 ms at 50 Hz 16.6 ms at 60 Hz
Encoding time per input	
• for 2048 units	max. 60 ms at 50 Hz max. 50 ms at 60 Hz
• for 4095 units	max. 80 ms at 50 Hz max. 66.6 ms at 60 Hz
Permissible voltage difference	
• between inputs	max. ± 1 V
• between inputs and central ground point	max. 75 V DC / 60 V AC
Permissible input voltage (destruction limit)	max. 24 V DC

Fault indication for	
• range exceeded	yes (more than 4095 units)
• sensor wire break	yes (selectable)
• general indication of wire break	red LED
Noise suppression for f = nx (50 / 60 Hz ± 1 %); n = 1, 2, ...	
• common–mode rejection (V_{pp} = 1 V)	min. 86 dB
• series–mode rejection	min. 40 dB
• (peak value of noise < rated value of input range)	
Basic error limits (operational error limit at 25 °C, referred to input ranges of module)	± 0.15 %
Operational error limits (0 to 60 °C, referred to input ranges of module)	± 0.4 %
Single errors	
• linearity	± 0.05 %
• tolerance	± 0.05 %
• polarity reversal error	± 0.05 %

Temperature error	
• final value	± 0.01 %/K
• zero point	± 0.002 %/K
Supply voltage L+	none
Auxiliary curent for PT 100	2.5 mA
Resistance sensor	
• tolerance	± 0.05 %
• temperature error	± 0.006 %/K
• load dependency	± 0.02 %/100 Ω
Rated isolation voltage (+9 V to ⏚)	12 V AC
• isolation group	1 × B
• tested with	500 V AC
Rated isolation voltage (inputs to +9 V)	60 V AC
• isolation group	1 × B
• tested with	500 V AC
Current consumption	
• from + 9 V (CPU)	typ. 70 mA
Power loss of the module	typ. 0.9 W
Weight	approx. 230 g (8 oz.)

Analog Input Module 2 × PT 100 / ± 500 mV **(6ES5 464–8MF21)**

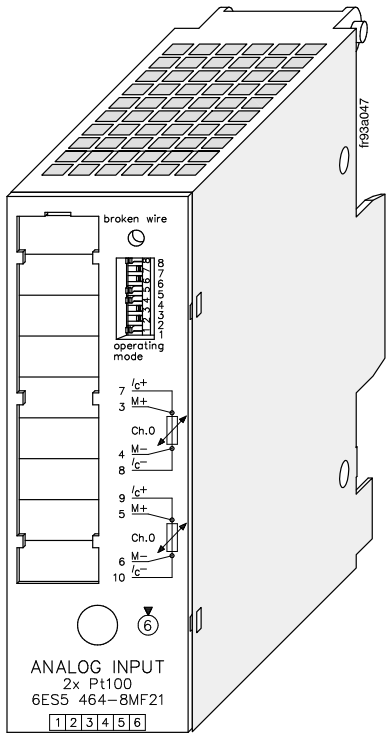

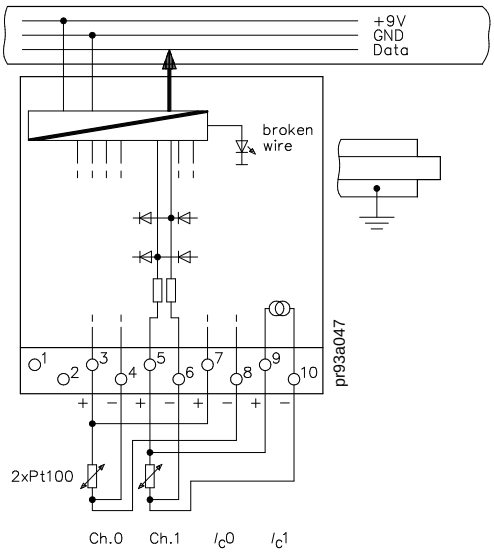

Technical Specifications	
Address ID for ET 200U	
• DP–Siemens	2AI or 013 1AI or 012
• DP–Norm	2AI or 081 1AI or 080
Input ranges (rated values)	
• resistance sensor (PT 100)	0 to 200 Ω (max. 400 Ω)
• voltage source	± 500 mV
Number of inputs	1 or 2 (selectable)
Galvanic isolation	yes (inputs to ground–ing point: not between inputs)
Input resistance	≥ 10 MΩ
Connection method of sensors	two or four wire con-nection
Digital representation of input signal	12 bits + sign (2048 units = rated value)
Measured value representation	two's complement (left–justified)

Measuring principle	integrating
Conversion principle	voltage–time conver-sion (dual slope)
Integration time (adjustable for optimum noise suppression)	20 ms at 50 Hz 16.6 ms at 60 Hz
Encoding time per input	
• for 2048 units	max. 60 ms at 50 Hz max. 50 ms at 60 Hz
• for 4095 units	max. 80 ms at 50 Hz max. 66.6 ms at 60 Hz
Permissible voltage difference	
• between inputs	max. ± 1 V
• between inputs and central ground point	max. 75 V DC/ 60 V AC
Permissible input voltage (destruction limit)	max. 24 V DC

Fault indication for	yes
• range exceeded	(more than 4095 units)
• sensor wire break	yes (selectable)
• general indication of wire break	red LED
Noise suppression for f = nx (50 / 60 Hz ± 1 %); n = 1, 2, ...	
• Common–mode rejection (V_{PP} = 1 V)	min. 86 dB
• series–mode rejection	min. 40 dB
• (peak vlaue of noise < rated value of input range)	
Basic error limits (operational error limit at 25 °C, referred to input ranges of module)	± 0.15 %
Operational error limits (0 to 60 °C, referred to input ranges of module)	± 0.4 %
Single errors	
• linearity	± 0.05 %
• tolerance	± 0.05 %
• polarity reversal error	± 0.05 %
Temperature error	
• final value	± 0.01 % / K
• zero point	± 0.002 % / K

Linearization exactness in rated range	± 0.5 °C
Characteristic linearization of PT 100–characteristic curve	DIN IEC 751
Length of cable	
• shielded	max. 200 m
Supply voltage L+	none
Auxiliary current for PT 100	2.5 mA
Auxiliary current single errors	
• tolerance	± 0.05 %
• temperature error	± 0.006 %/K
• influence of load variation	± 0.02 %/100 Ω
Rated isolation voltage (+9 V to ⏚)	12 V AC
• isolation group	1 × B
• tested with	500 V AC
Rated isolation voltage (inputs to +9 V)	60 V AC
• isolation group	1 × B
• tested with	500 V AC
Current consumption	
• from +9 V (CPU)	typ. 100 mA
Power loss of the module	typ. 0.9 W
Weight	approx. 230 g (8 oz.)

Analog Input Module 4 × +0 to 10 V **(6ES5 466–8MC11)**

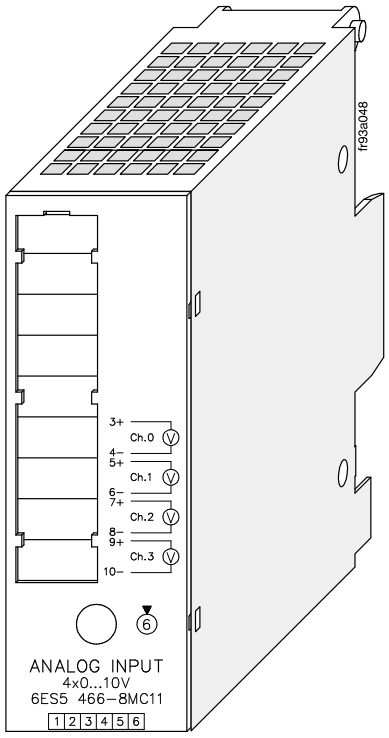

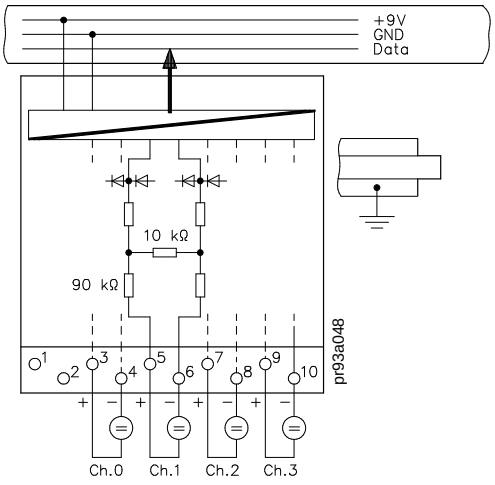

Technical Specifications	
Address ID for ET 200U	
• DP Siemens	2AI or 013
• DP Standard	2AI or 081
Input ranges (rated values)	+0 to 10 V
Number of inputs	4
Galvanic isolation	no
Input resistance	100 kΩ
Connection method of sensors	2–wire connection
Digital representation of the input signal	8 bits (256 units = rated value)
Representation of the measured value	binary (→ Table 8-1)
Measuring principle	successive approximation
Conversion time	100 µs
Encoding time per input	5 ms
Permissible voltage difference	
• between inputs	max. ± 1 V
Permissible input voltage (destruction limit)	max. 60 V DC

Current consumption	
• from + 9 V (CPU)	typ. 100 mA
Fault indication for	
• range exceeded	no
• sensor wire break	no
• general indic. of wire break	no
Noise suppression	
• common mode interference (V_{PP} = 1 V)	min. 86 dB
Basic error limits (operational error limit at 25 °C, referred to input ranges of module)	± 0.4 %
Operational error limits (0 to 60 °C, referred to input ranges of module)	± 0.6 %
Length of cable	
• shielded	max. 200 m
Supply voltage L+	none
Power loss of the module	typ. 0.9 W
Weight	approx. 200 g (7 oz.)

Table 8-1 Binary representation of the measured value

Units	Input voltage in V	Bit							
		7 2^7	**6** 2^6	**5** 2^5	**4** 2^4	**3** 2^3	**2** 2^2	**1** 2^1	**0** 2^0
255	9.961	1	1	1	1	1	1	1	1
254	9.922	1	1	1	1	1	1	1	0
192	7.500	1	1	0	0	0	0	0	0
191	7.461	1	0	1	1	1	1	1	1
128	5.000	1	0	0	0	0	0	0	0
127	4.961	0	1	1	1	1	1	1	0
64	2.500	0	1	0	0	0	0	0	0
63	2.461	0	0	1	1	1	1	1	1
1	0.039	0	0	0	0	0	0	0	1
0	0.000	0	0	0	0	0	0	0	0

8.10 Analog Output Modules

Analog Output Module 2 × ± 10 V **(6ES5 470–8MA12)**

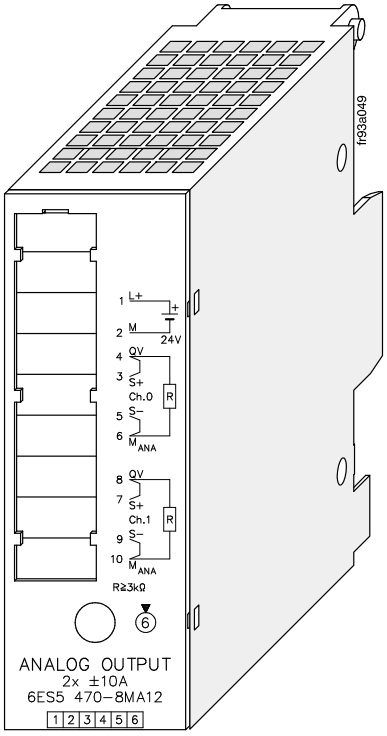

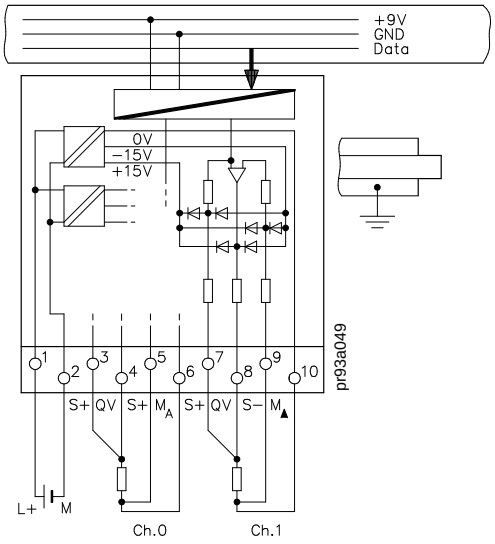

Technical Specifications	
Address ID for ET 200U	
• DP Siemens	2AQ or 021
• DP Standard	2AQ or 097
Output range (rated values)	± 10 V
Number of outputs	2
Galvanic isolation	yes (outputs to grounding point and between outputs)
Input resistance	≥ 3.3 kΩ
Capacitive load incl. cable capacitance	<100 nF
Connection method	two– or four–wire connection
Digital representation of output signal	11 bits + sign (1024 units = rated value)

Measured value representation	two's complement (left–justified)
Conversion time (0 to 100 %)	max. 0.15 ms
Permissible overload	25 %
Short–circuit protection	yes
Short–circuit current	± 30 mA
Permissible voltage difference to ground and between outputs	max. 75 V DC/ 60 V AC
Basic error limits (operational error limit at 25 °C, referred to input ranges of module)	± 0.3 %
Operational error limits (0 to 60 °C, referred to input ranges of modue)	± 0.6 %

Length of cable	
•shielded	max. 200 m
Supply voltage L+ (peripheral)	
• rated value	24 V DC
• ripple V_{PP}	3.6 V
• permissible range	
• (ripple included)	20 to 30 V
Rated isolation voltage (+9 V to ⏚)	12 V AC
• isolation group	1 × B
• tested with	500 V AC

Rated isolation voltage (output to L+, between outputs, output to +9 V)	60 V AC
• isolation group	1 × B
• tested with	500 V AC
Current consumption	
• from + 9 V (CPU)	typ. 170 mA
• from L+	typ. 100 mA
Power loss of the module	typ. 3.1 W
Weight	approx. 290 g (10 oz.)

Analog Output Module 2 × ± 20 mA **(6ES5 470–8MB12)**

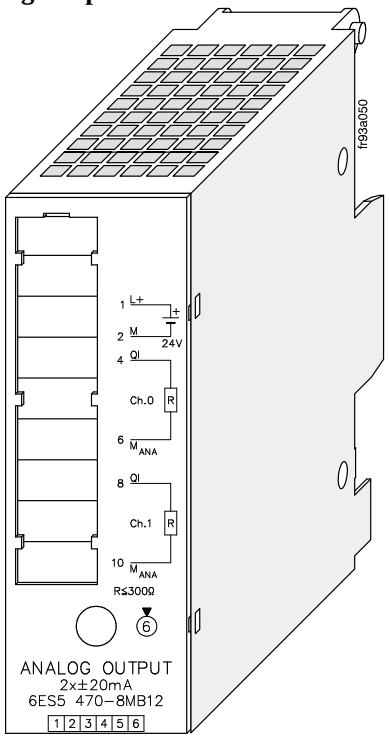

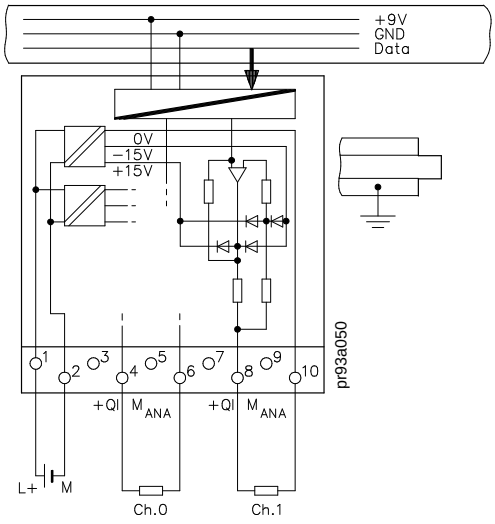

Technical Specifications	
Address ID for ET 200U	
• DP Siemens	2AQ or 021
• DP Standard	2AQ or 097
Output range (rated value)	± 20 mA
Number of outputs	2
Galvanic isolation	yes (outputs to grounding point and between outputs)
Input resistance	max. 300 Ω
Connection method	two–wire connection
Digital representation of output signal	11 bits + sign (1024 units = rated value)
Measured value representation	two's complement (left–justified)
Conversion time (0 to 100 %)	max. 0.15 ms
Permissible overload	25 %
Open–circuit voltage	≤ ± 15 V
Permissible voltage difference to central ground point and between outputs	max. 75 V DC/ 60 V AC

Basic error limits (operational error limit at 25 °C, referred to input ranges of module)	± 0.3 %
Operating error limits (0 to 60 °C, referred to input ranges of module))	± 0.6 %
Length of cable	
•shielded	max. 200 m
Supply voltage L+	
• rated value	24 V DC
• ripple V_{PP}	3.6 V
• permissible range	20 to 30 V
• (ripple included)	20 to 30 V
Rated isolation voltage (+9 V to ⏚)	12 V AC
• isolation group	1 × B
• tested with	500 V AC
Rated isolation voltage (output to L+, between outputs, output to +9 V)	60 V AC
• isolation group	1 × B
• tested with	500 V AC

Current consumption	
• from + 9 V (CPU)	typ. 170 mA
• from L+	typ. 130 mA

Power loss of the module	typ. 3.8 W
Weight	approx. 290 g (10 oz.)

Analog Output Module 2 × 4 to 20 V **(6ES5 470–8MC12)**

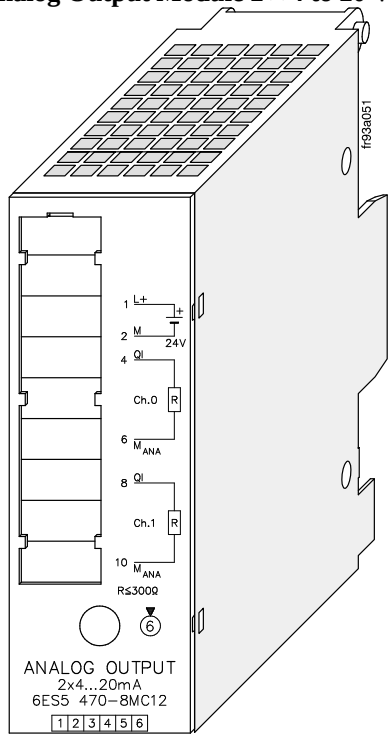

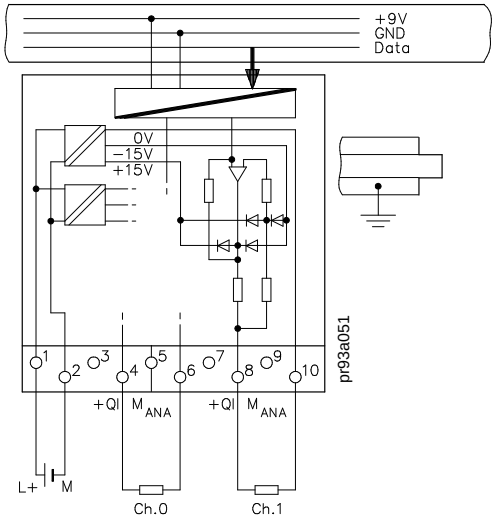

Technical Specifications	
Address ID for ET 200U	
• DP Siemens	2AQ or 021
• DP Standard	2AQ or 097
Output range (rated value)	4 to 20 mA
Number of outputs	2
Galvanic isolation	yes (outputs to grounding point and between outputs)
Input resistance	max. 300 Ω
Capacitive load incl. cable capacitance	<100 nF
Connection method	two–wire connection
Digital representation of output signal	11 bits + sign (1024 units = rated value)
Measured value representation	two's complement (left–justified)
Conversion time (0 to 100 %)	max. 0.15 ms
Permissible overload	25 %

Open–circuit voltage	≤ ± 15 V
Permissible voltage difference to central ground point and between outputs	max. 75 V DC/ 60 V AC
Basic error limits (operational error limit at 25 °C, referred to input ranges of module)	± 0.2 %
Operational error limits (0 to 60 °C, referred to input ranges of module)	± 0.6 %
• linearity	± 0.2 %
• temperature error	± 0.01 %/K
Length of cable	
• shielded	max. 200 m
Supply voltage L+	
• rated value	24 V DC
• ripple V_{PP}	3.6 V
• permissible range	
• (ripple included)	20 to 30 V

Rated isolation voltage (+9 V to ⏚)	12 V AC
• isolation group	1 × B
• tested with	500 V AC
Rated isolation voltage (output to L+, between outputs, output to +9 V)	60 V AC
• isolation group	1 × B
• tested with	500 V AC

Current consumption	
• from + 9 V (CPU)	typ. 170 mA
• from L+	typ. 130 mA
Power loss of the module	typ. 3.8 W
Weight	approx. 290 g (10 oz.)

Analog Output Module 2 × 1 to 5 V (6ES5 470–8MD12)

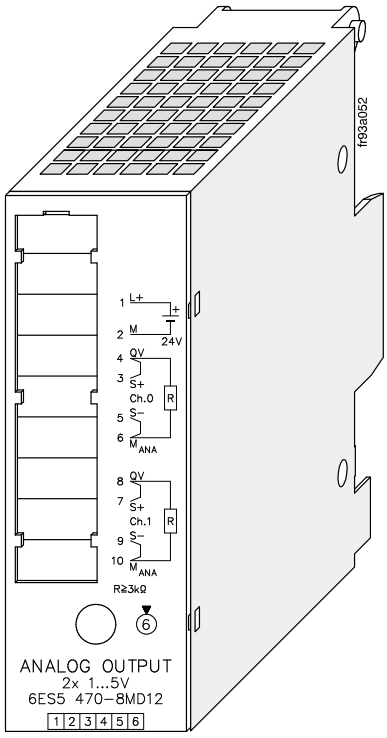

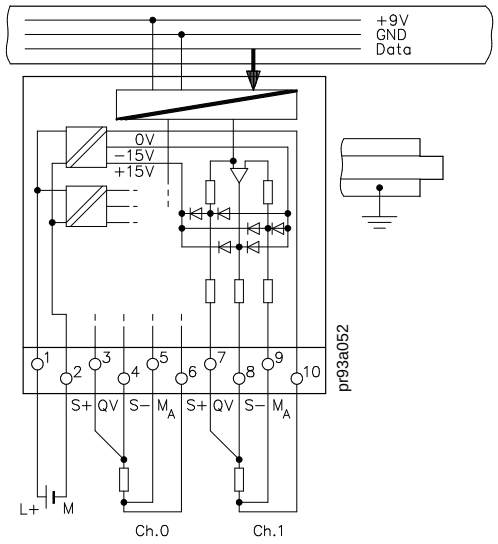

Technical Specifications	
Address ID for ET 200U	
• DP Siemens	2AQ or 021
• DP Standard	2AQ or 097
Output range (rated value)	1 to 5 V
Number of outputs	2
Galvanic isolation	yes (outputs to grounding point and between outputs)
Input resistance	min. 3.3 kΩ
Connection method	two– or four–wire connection
Digital representation of output signal	11 bits + sign (1024 units = rated value)
Measured value representation	two's complement (left–justified)
Conversion time (0 to 100 %)	max. 0.15 ms
Permissible overload	25 %
Short–circuit protection	yes

Short–circuit current	± 30 mA
Permissible voltage difference to central ground point and between outputs	max. 75 V DC/ 60 V AC
Basic error limits (operational error limit at 25 °C, referred to input ranges of module)	± 0.2 %
Operational error limits (0 to 60 °C, referred to input ranges of module)	± 0.6 %
Length of cable •shielded	max. 200 m
Supply voltage L+	
• rated value	24 V DC
• ripple V_{PP}	3.6 V
• permissible range	20 to 30 V
• (ripple included)	
Rated isolation voltage (+9 V to ⏚)	12 V AC
• isolation group	1 × B
• tested with	500 V AC

Rated isolation voltage (output to L+, between outputs, output to +9 V)	60 V AC
• isolation group	1 × B
• tested with	500 V AC

Current consumption	
• from + 9 V (CPU)	typ. 170 mA
• from L+	typ. 100 mA
Power loss of the module	typ. 3.1 W
Weight	approx. 290 g (10 oz.)

Function Modules

9

9.1	Comparator Module 2 x 0.5 to 20 mA / 0.5 to 10 V (6ES5 461–8MA11)	9-2
	Function	9-3
	Installation	9-3
	Wiring	9-3
	Addressing	9-3
	Typical Application	9-4
9.2	Timer Module 2 x 0.3 to 300 s (6ES5 380–8MA11)	9-5
	Function	9-6
	Installation	9-6
	Wiring	9-6
	Addressing	9-6
	Typical Application as On–Delay Timer	9-7
9.3	Simulator Module (6ES5 788–8MA11)	9-8
	Function	9-9
	Installation	9-9
	Wiring	9-9
	Addressing	9-9
	Typical Application	9-9
9.4	Diagnostic Module (6ES5 330–8MA11)	9-10
	Function	9-11
	Installation	9-12
	Wiring	9-12
	Addressing	9-12
9.5	Counter Module 2 x 0 to 500 Hz (6ES5 385–8MA11)	9-13
	Function	9-15
	Installation	9-15
	Wiring	9-15
	Addressing	9-15
	Timing Diagram	9-16
	Typical Application	9-17
9.6	Counter Module 25/500 kHz (6ES5 385–8MB11)	9-18
	Function	9-20
	Installation	9-21
	Functional Description of the COUNTER Mode	9-28
	Functional Description of the Position Decoder	9-31
	Settings	9-31
	Entering New Setpoints for the Counter and Position Decoder	9-40
	Addressing	9-42

9.7 Closed–Loop Control Module IP 262 (6ES5 262–8MA12) (6ES5 262–8MB12) 9-44
Function 9-46
Modules 9-46
Installation 9-46
Addressing 9-47
Operating Modes 9-47

9.8 IP 263 Positioning Module (6ES5 263–8MA11) 9-48
Assignments of Outputs 9-50
Positioning 9-50

9.9 IP 264 Electronic Cam Controller Module (6ES5 264–8MA11) 9-52
Dead Time Compensation 9-54
Direct Process Connection 9-54

9.10 IP 265 High Speed Sub Control (6ES5 265–8MA01) 9-55
Function 9-57
Installation 9-57
Addressing 9-57

9.11 IP 266 Positioning Module (6ES5 266–8MA11) 9-58
Operation Principle 9-60
Operating Modes 9-60
Positioning 9-61
Operating Modes 9-62
Installation 9-62

9.12 IP 267 Stepper Motor Control Module (6ES5 267–8MA11) 9-63
Operation Principle of the IP 267 9-64
LEDs 9-65
Installation 9-65
Restriction 9-65

9.13 CP 521 BASIC Communications Module (6ES5 521–8MB11) 9-66
Function 9-67
Installation 9-67
Addressing 9-67

9.14 CP 521 SI Communications Processor (6ES5 521–8MA21) 9-68
Function 9-69
Unidirectional Data Exchange 9-69
Bidirectional Data Exchange 9-69
Integrated Real–Time Clock 9-70
Installation 9-70
Addressing 9-70

Figures

9-1	Scanning the Comparator Module	9-3
9-2	Scanning the Timer Module	9-6
9-3	Scanning the Simulator Module as a Digital Input	9-9
9-4	Setting the Input Voltage Range on the Counter Module (500 Hz)	9-15
9-5	Scanning the Counter Module (500 Hz)	9-16
9-6	Timing Diagram: Setting and Resetting an Output of the Counter Module (500 Hz)	9-16
9-7	Switch Positions on the Operating Mode Switch of the Counter Module	9-20
9-8	Pin Assignment of the 15–Pin Sub–D Female Connector of the Counter Module	9-21
9-9	Connecting a Counting Pulse Sensor for 5 V Differential Signal to RS 422	9-22
9-10	Connecting a Counting Pulse Sensor for 24 V DC	9-22
9-11	Connecting a 5 V Position Sensor to RS 422A	9-23
9-12	Connecting a 24 V DC Position Sensor	9-23
9-13	Signal Sequence for Up–Counting	9-24
9-14	Assignment Diagram for the Terminal Block	9-25
9-15	Diagnostics Byte	9-27
9-16	Switching the Outputs Dependent on the Status of the Counter and the Enable Input	9-30
9-17	Position of the Reference Point (SYNC Bit 0=1) within the Reference Signal Range	9-34
9-18	Position of the Reference Point (SYNC Bit=1) after the Reference Signal	9-34
9-19	Position of the Reference Point (SYNC Bit=1) during a Reversal of Direction before Reaching the Reference Pulse in a Positive Direction	9-34
9-20	Schematic of a Reference Point Approach Operation	9-35
9-21	Enabling the Outputs – Reaching the Setpoints – Resetting the Outputs	9-36
9-22	Approaching a Setpoint in Up–Count Direction	9-38
9-23	Approaching a Setpoint in Down–Count Direction	9-38
9-24	Approaching a Setpoint in Up–Count Direction and Subsequent Reversal of Direction	9-39
9-25	Requirement for New Setpoint	9-41
9-26	Positioning with the IP 263	9-51
9-27	Course of a Following Error during a Positioning Operation	9-61
9-28	Velocity Profile of IP 267	9-64

Tables

9-1	Sending Data from the Counter Modules to the CPU	9-26
9-2	Sending Data from the CPU to the Counter Module	9-26
9-3	Pulse Evaluation	9-31
9-4	Sample Traverse Range	9-32
9-5	Reaction of the Counter Module during Transfer of the Setpoints	9-40
9-6	Meaning of the Bytes of a Slot Address	9-42
9-7	Designation of the Operating Modes of the IP 266	9-62

Function Modules

9

The following are dealt with in this chapter:

- Function,
- Installation,
- Wiring and
- Addressing of function modules.

In addition, you will find the technical specifications of the modules. There are general technical specifications in Section 8.1.

You will also find application examples.

9.1 Comparator Module 2×0.5 to 20 mA / 0.5 to 10 V (6ES5 461–8MA11)

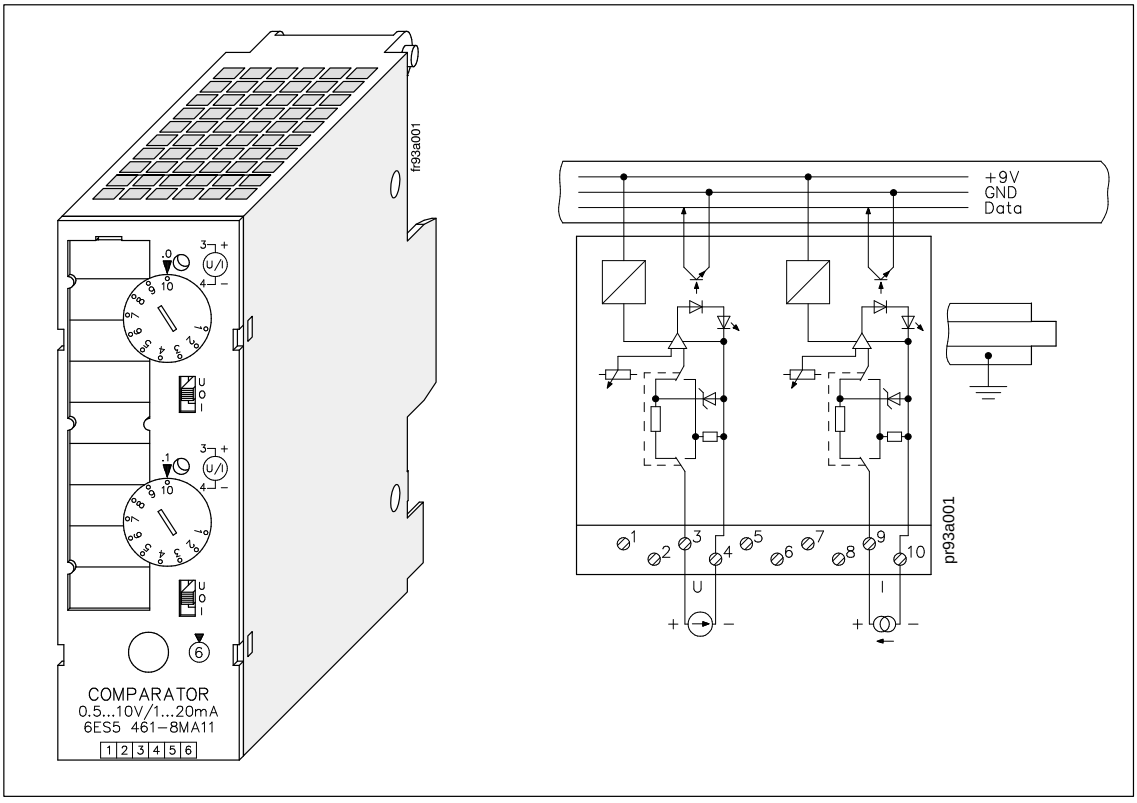

Technical Specifications	
Address identifier for ET 200U	
• DP Siemens	4DI or 008
• DP Standard	8DI or 016
Channels	2
Galvanic isolation	yes
Current or voltage measurement	switch–selectable
Switch position “0”	no measuring
Display	green LED for actual value ≥ setpoint
Setpoint adjustment	with potentiometer
Setting error	≤ ±10 %
Reproducibility	≤ ±2 %
Hysteresis	≤ 10 %
“V” measuring range	DC 0.5 V to 10 V
Input resistance	47 kΩ
Inherent delay	typ. 5 ms

Input voltage	max. DC 100 V (≤ 0.5 s)
“1” measuring range	0.5 mA to 20 mA
Input resistance	500 Ω
Overload capability	100 %
Rated isolation voltage (+9 V to measuring circuit and between measuring circuits)	30 V AC
• isolation group	2×B
• tested with	500 V AC
Rated isolation voltage (+9 V to ⏚)	12 V AC
• isolation group	1×B
• tested with	500 V AC
Length of cable	
• shielded	200 m
• unshielded	100 m
Current consumption	
• from +9 V (CPU)	typ. 35 mA
Power loss of the module	typ. 0.3 W
Weight	200 g

Function

The module has two isolated comparators for voltage or current measurement (selector switch with positions U/0/I). When the preset value is reached, the LED of the respective channel lights up and sends a 1 signal to the programmable controller.

Remove the module or disconnect the measuring circuit before you select the function.

In switch position “0”, the comparator is switched off; if the comparator is scanned, a “0” signal results.

You set the response threshold of the comparator using a selector on the front panel. The selector has scale divisions to simplify adjustment.

Installation

You install the comparator module on a bus unit like any other input or output module.

Wiring

See schematic diagram. Unused inputs can be left open.

Addressing

The comparator module is addressed like a two–channel digital input module (channel 0 or 1, see Figure 9-1).

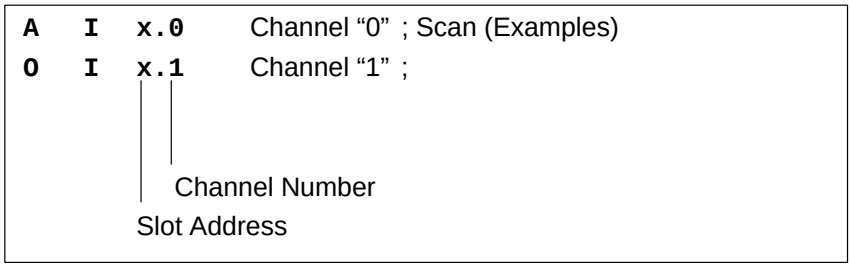

Figure 9-1 Scanning the Comparator Module

Typical Application

A comparator module is mounted at slot 4 (module address 4.0). The current source is connected to channel 1. If Schmitt trigger 1 detects that the current has exceeded the preset value, a switch (output 5.1) is operated.

Terminal Connections

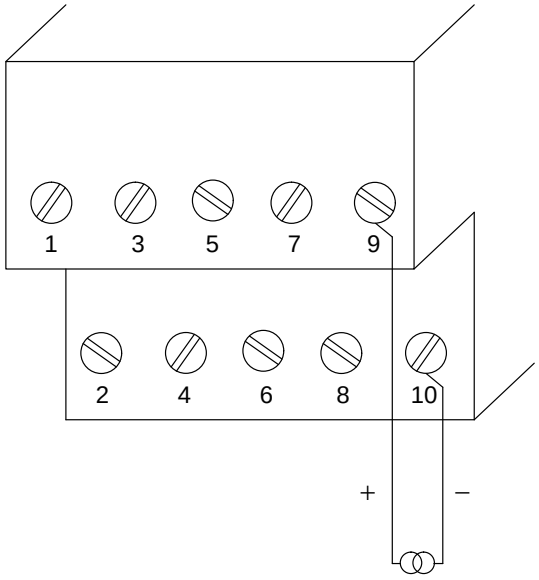

STL	Explanation
`A I 4.1` `= Q 5.1`	As soon as the limit is reached or exceeded, input 4.1 becomes 1; this sets output 5.1 to 1.

9.2 Timer Module 2×0.3 to 300 s (6ES5 380–8MA11)

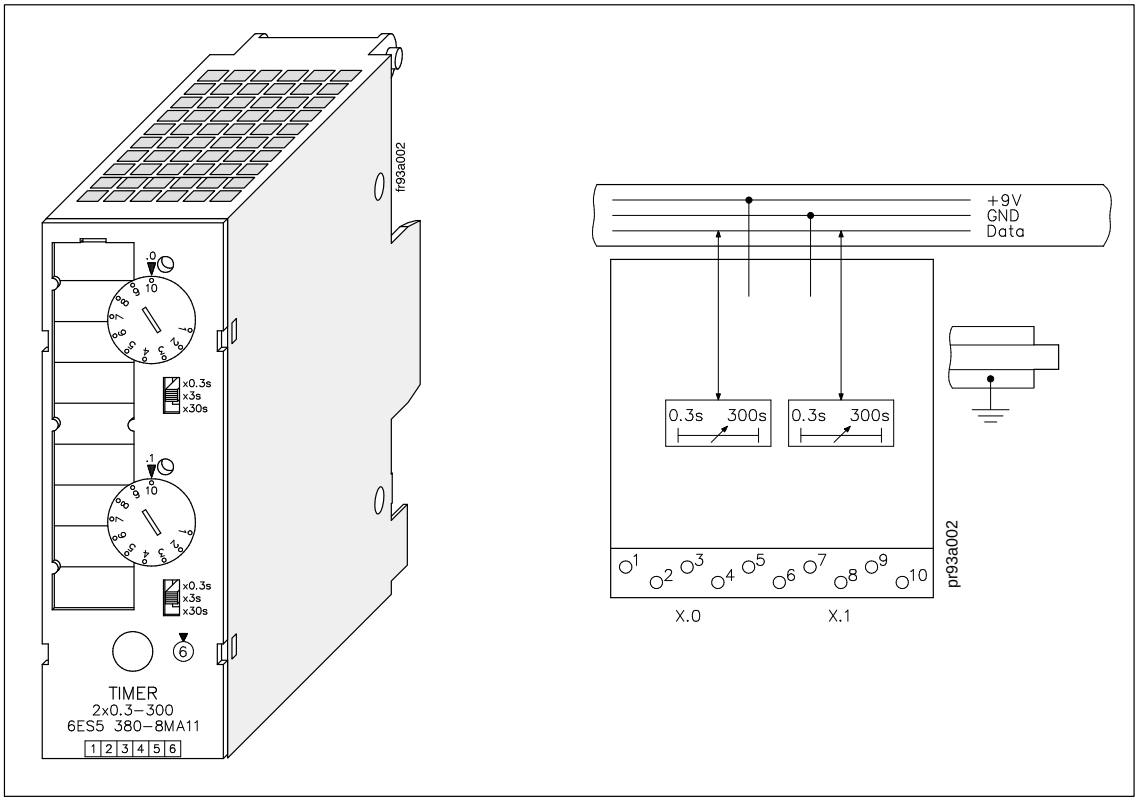

Technical Specifications	
Address ID for ET 200U	
• DP Siemens	4DX or 024
• DP Standard	8DX or 048
Number of timers	2
Time setting	0.3 to 3 s
Range extension factor	×10, ×100
Function display	green LED
Setting error	≤ ±10 %

Reproducibility	≤ ±3 %
Temperature influence	+1 %/10 °C (80 °F) from set time
Rated isolation voltage (+9 V to ⏚)	12 V AC
• isolation group	1×B
• tested with	500 V AC
Current consumption	
• from +9 V (CPU)	typ. 10 mA
Weight	approx. 200 g

Function

The module contains two pulse timers. As long as the timer is running, the following conditions exist:

- The LED of the respective channel is lit

  and

- A 1 is reported to the CPU.

You preselect the pulse duration using the time range selector × 0.3 s/ × 3 s/ × 30 s in a definite range and then set the exact value by means of a potentiometer on the front panel. This selector has scale divisions to simplify setting.

(time value = time range × scale value)

Example

Time range:	× 3 s
Scale value:	7 s
Set time value:	7 × 3 s = 21 s

Installation

You install the timer on a bus unit like any other input or output module.

Wiring

No wiring is required.

Addressing

A timer module is addressed like a two–channel digital module (channel 0 or 1, see Figure 9-2).

The timer module is addressed like a digital output module for starting, resetting, or interrupting the pulse. The signal state is scanned like a digital input module.

```
S   Q   x.2     Channel "0"  ; Starting the Pulse
S   Q   x.3     Channel "1"

R   Q   x.2                  ; Interrupt/
R   Q   x.3                  ; Reset

A   I   x.0                  ; Scan
A   I   x.1                  ; "1" = Timer Running
          |  |
          |  Channel Number
          Slot Address
```

Figure 9-2 Scanning the Timer Module

Typical Application as On–Delay Timer

A timer module is mounted at slot 5 (module address 5.0). A time of 270 s is set on channel 0 of this module by means of the time–range selector and the potentiometer. The timer is started when input 0.0 is 1. A lamp lights up (output 4.0) when the timer has run down.

Terminal Connections	
No process peripherals are connected to this module. Unlike the internal timers, times can be set or modified using a timer module without making any program modifications.	
STL	**Explanation**

`A  I  0.0`
`AN  I  5.0`
`A  F  65.0`
`S  Q  4.0`
`A  I  5.0`
`=  F  65.0`
`AN  I  0.0`
`R  Q  4.0`
`A  I  5.2`
	The timer must not be scanned in the program scan cycle in which it was enabled since the CPU would not receive the acknowledgement that the timer had started until one program scan later.
	If flag 65.0 is 1 and the timer has run down (AN I 5.0), output 4.0 is set to 1.
	If the “Timer started” message has been sent to the CPU, the flag is set.
	If I 0.0 is 0, the lamp is switched off.
	The timer is started if I 0.0 is 1.

9.3 Simulator Module (6ES5 788–8MA11)

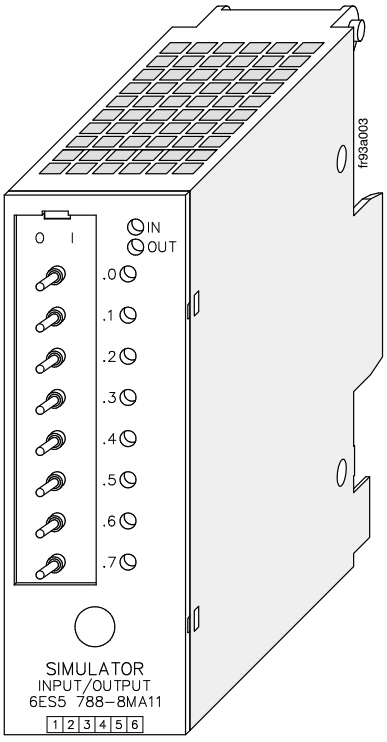

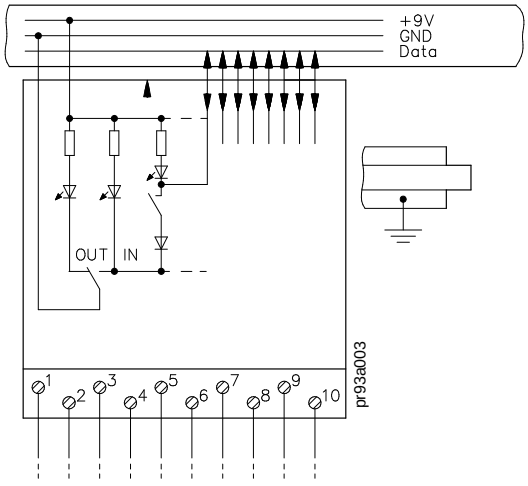

Technical Specifications	
Address ID for ET 200U	
• input simulator	
DP Siemens	8DI or 009
DP Standard	8DI or 016
• output simulator	
DP Siemens	8DQ or 017
DP Standard	8DQ or 032
Function selection	
• simulation of 8 input signals	selected by switch on rear of module
• display of 8 output signals	
Function display	yellow LED

"0" / "1" input signals	switch–selectable
Rated isolation voltage (+ 9 V to ⏚)	12 V AC
• isolation group	1 × B
• tested with	500 V AC
Signal status display for input/ output	green LEDs
Current consumption	
• from + 9 V (CPU)	30 mA
Power loss of the module	typ. 0.3 W
Weight	190 g

Function

Simulator modules are eight–channel modules that can simulate digital input signals and display output signals.

The type of module to be simulated (input or output) is selected by means of a switch on the rear of the module and displayed by two LEDs on the front panel.

The module cannot simulate interrupt inputs.

Installation

You install the simulator module on a bus unit like any other input or output module. The module does not have a coding key and can therefore replace any digital module. You do not have to readjust the coding element on the bus unit.

Wiring

There is no electrical connection between the module and the terminal block. You can therefore insert the module into slots that have already been wired and connected to the power supply.

Addressing

A simulator module is addressed like a eight–channel digital module (channels 0 to 7, see Figure 9-3).

```
A   I   x.0     Channel “0” ; Scan
O   Q   x.1     Channel “1”; (Examples)
          |  |
          |  Channel Number
          Slot Address
```

Figure 9-3 Scanning the Simulator Module as a Digital Input

Typical Application

The CPU is in the RUN mode, the green LED is lit, but the PLC is malfunctioning. You have also discovered that the fault must be in a particular I/O module. If the module has no fault indicator, check to see if the following conditions exist:

- The power supply is connected.
- The bus connections and interface modules are plugged in correctly.

Then try to access the module via the process image (using the STATUS or STATUS VAR function). If this procedure is not successful, replace the module with the simulator module. Perform a second check with the STATUS or STATUS VAR function. If the simulator performs, the input/output module you replaced is defective.

9.4 Diagnostic Module (6ES5 330–8MA11)

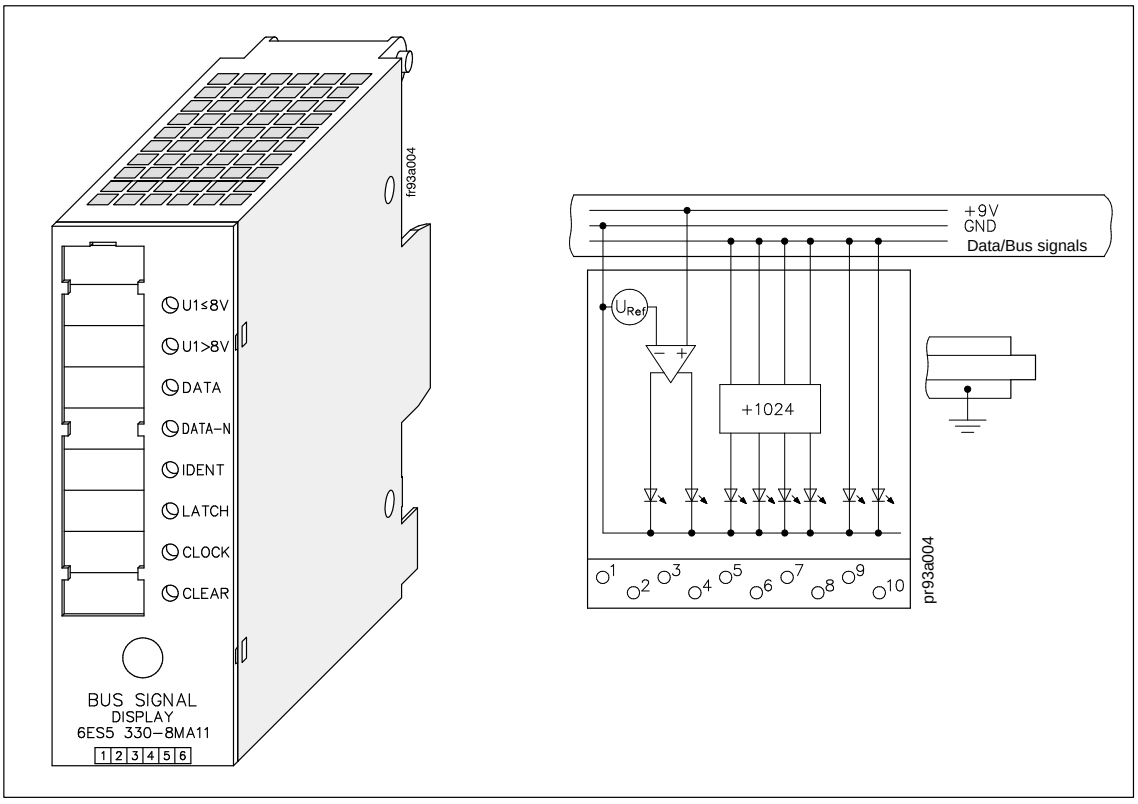

Technical Specifications	
Address identifier for ET 200U	
• DP Siemens	000
• DP Standard	000
Rated isolation voltage (+ 9 V to ⏚)	12 V AC
• isolation group	1 × B
• tested with	500 V AC
Voltage monitor	
• undervoltage	red LED
• voltage ok	green LED

Signal status display for control signals	yellow LEDs
Current consumption	
• from + 9 V (CPU)	25 mA
Power loss of the module	typ. 0.3 W
Weight	approx. 175 g

Function

The diagnostic module is used for monitoring the S5–100U I/O bus. The following LEDs on the front panel display the signal states of the control lines and the supply voltage for the I/O bus:

- IDENT

The programmable controller executes an IDENT run after each change from STOP to RUN mode and after any changes in the configuration in order to determine the current configuration of the programmable controller. The IDENT LED lights up briefly.

If the LED lights up in the RUN mode, this indicates that a faulty I/O module has been plugged in.

- CLEAR

The CLEAR signal line is 1 only in the STOP mode in normal operation.

In this case, the outputs of the output modules are disabled.

If CLEAR is 1 in the RUN mode, the control line itself may be defective (no contact).

- LATCH/CLOCK

These two control lines control data interchange between the ET 200U interface module, the I/O bus, and the I/O modules.

During normal operation, both LEDs must flash.

The flashing frequency provides information on the speed of the serial bus.

If both LEDs show a steady light in the RUN mode, the bus unit that the diagnostic module is plugged into is defective.

- DATA/DATA–N

The alternate lighting up of the DATA and DATA–N LEDs indicates data flow on the I/O bus.

If these two LEDs show a steady light, the bus unit that the diagnostic module is plugged into is defective.

- U1 $\leq$ 8 V

If the supply voltage of a slot remains at a value U1 $\leq$ 8 V, proper functioning of the I/O modules is no longer guaranteed. An excessively high bus load (> 1 A) causes the low supply voltage.

If this LED flickers, noise pulses are superimposed on the supply voltage U1 (e.g., by the coupling of noise pulses).

The LED lights up briefly if the programmable controller is switched on or off.

- U1 > 8 V

The supply voltage of the I/O bus is O.K.

Installation

You install the diagnostic module on a bus unit like any other input or output module. The module has no mechanical coding so you do not have to reset the coding element on the bus unit.

Note

You can plug in and remove the module regardless of the operating status of the programmable controller.

Wiring

No wiring is required. You do not have to remove existing wiring.

Addressing

There is no addressing since the module does not supply any I/O data.

9.5 Counter Module 2×0 to 500 Hz (6ES5 385–8MA11)

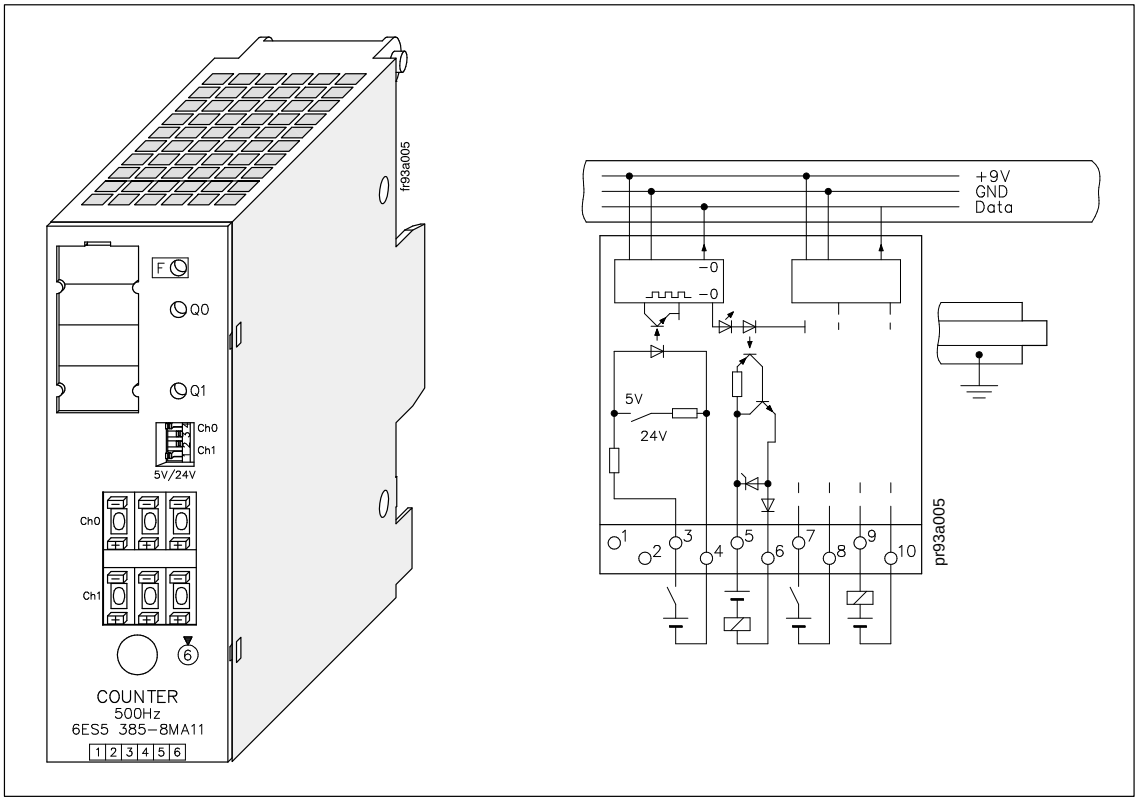

Technical Specifications	
Address identifier for ET 200U	
• DP Siemens	4DX or 024
• DP Standard	8DX or 048
Inputs	
Number of Inputs	2
Galvanic isolation	yes
Input voltage	
• rated value	5 V / 24 V DC
• for “0” signal	0 to 0.8 / –33 to 5 V
• for “1” signal	3 to 5 V / 13 to 33 V
Input current for “1” signal	typ. 1.5 / 8.5 mA
Inherent delay	typ. 180 µs
Input frequency	max. 500 Hz
Connection of 2–wire BERO (24 V DC)	possible
• quiescent current	≤ 1.5 mA
Length of cable	
• unshielded	max. 30 m / 50 m
Outputs	
Number of Outputs	2
Galvanic Isolation	yes
Supply voltage L+	
• rated value	24 V DC
• permissible range (including ripple)	20 to 30 V
Output current for “1” signal	
• rated value	0.5 A
• permissible range	5 to 500 mA
• lamp load	max. 5 W

Residual current at “0” signal	max. 1 mA
Output voltage	
• for “0” signal	max. 3 V
• for “1” signal	max. L+ (– 2.5 V)
Short–circuit protection	electronic
Fault indication (red LED)	short–circuit
Voltage induced on circuit interruption (internal) limited to	L+ (– 47 V)
Switching frequency	
• resistive load	max. 100 Hz
• inductive load	max. 2 Hz
Total permissible current of outputs	1 A
Driving a digital input	possible
Paralleling of outputs	possible
• max. current	0.5 A
Length of cable	
• unshielded	max. 100 m
Rated isolation voltage (inputs and outputs to each other and to ⏚ ; input to + 9 V)	60 V AC
• isolation group	1 × B
• tested with	1250 V AC
Current consumption	
• from + 9 V (CPU)	typ. 20 mA
Power loss of the module	typ. 2.5 W
Weight	approx. 200 g

Function

The module consists of two independent down counters with isolated inputs and outputs. It counts input signals up to a frequency of 500 Hz from a set value down to the value 0. When zero is reached, the 24 V DC output of the module is energized.

At the same time, a green LED on the module lights up and the input signal (I x.0 or I x.1) is set to 1.

You can enter the setpoint (0 to 999) via the three–digit thumbwheel switches on the front panel of the module.

You can set the input voltage ranges for 5 V DC or 24 V DC on rocker switches on the front panel (see Figure 9-4).

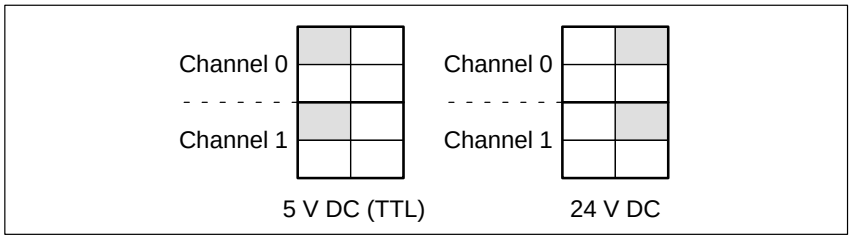

Figure 9-4 Setting the Input Voltage Range on the Counter Module (500 Hz)

Installation

You install the counter module on a bus unit like any other module.

Wiring

See the schematic diagram.

Addressing

You can address a counter module like a two–channel digital module (channel 0 or 1). For enabling and resetting the counter, you address the module like a digital output module. The counter reading is scanned in the same way as a digital input module (see Figure 9-5).

```
S   Q   x.0     Channel “0” ; Counter Enable
S   Q   x.1     Channel “1” ; (Set to Start Value)

R   Q   x.0                 ; Counter Reset
R   Q   x.1                 ;

A   I   x.0                 ; Scan
A   I   x.1                 ; “1” = Counter at Zero
        | |
        | Channel Number
        Slot Address
```

Figure 9-5 Scanning the Counter Module (500 Hz)

Timing Diagram

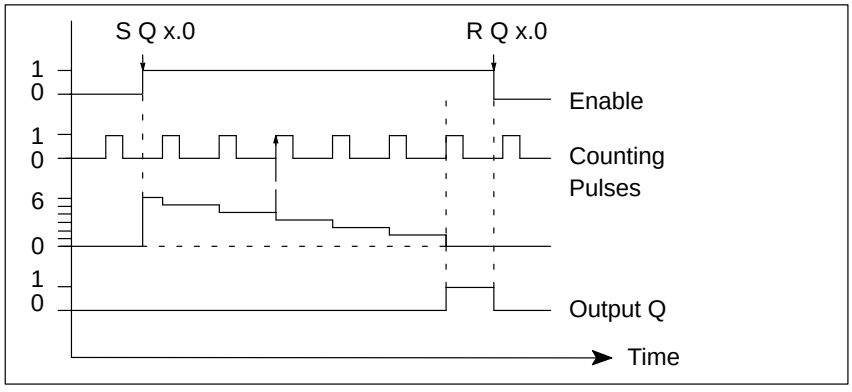

Figure 9-6 Timing Diagram: Setting and Resetting an Output of the Counter Module (500 Hz)

Typical Application

A counter module is plugged into slot 2 (module address 2.0). A value of 100 is set on channel 0 of this module via the three–digit thumbwheel switches. The incoming pulses are counted once the counter has been enabled by the control program. As soon as 100 pulses have been counted, a signal (output 4.0) is released.

Connection Diagram

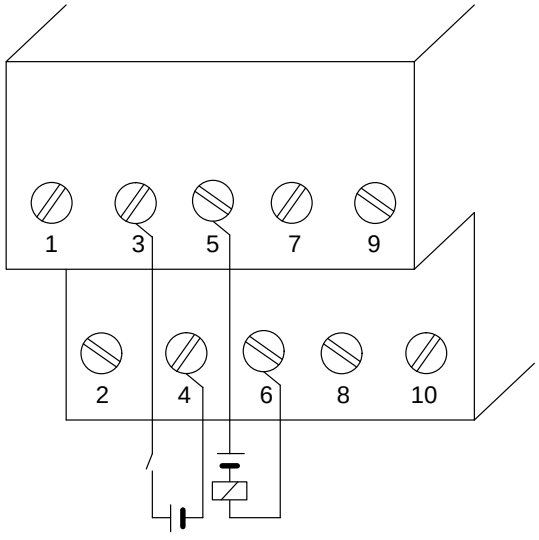

STL	Explanation

`S  Q  2.0`
`A  I  2.0`
`=  Q  4.0`
	During the counting operation, input I 2.0 is 0. When the counter status is 0, input I 2.0 is set to 1. Output Q 4.0 is then also set. Direct output at terminals 5 and 6 is possible.

9.6 Counter Module 25/500 kHz (6ES5 385–8MB11)

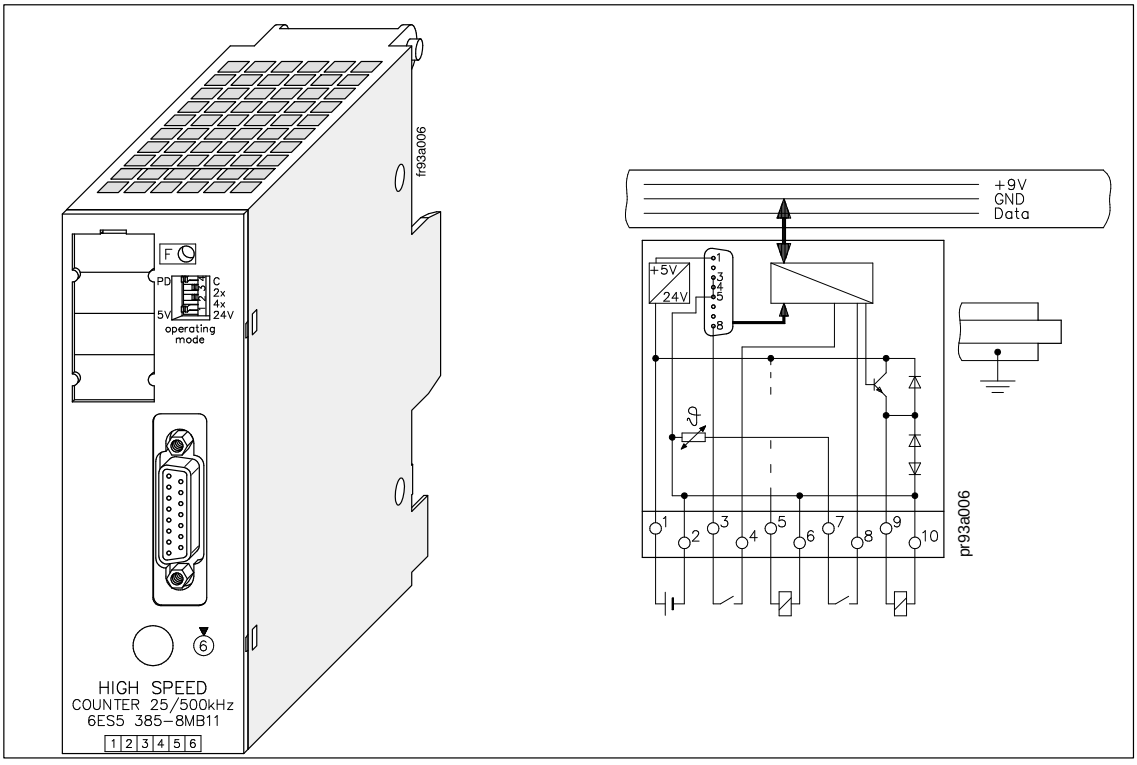

Technical Specifications	
Address identifier for ET 200U	
• DP Siemens	2AX or 029
• DP Standard	2AX or 241
Operating mode (switch–selectable)	
• position decoder	PD (Position decoder)
• counter	C (Counter)
Decoder inputs	1 decoder 5 V (differential input) or 1 decoder 24 V DC
Digital inputs	2; reference and enabling
Digital outputs	2; setpoints reached 1 and 2
Galvanic isolation	no
Counting range Operating mode	
• position decoder	two's complement (KF) –32768 to +32767
• counter	unipolar representation (KH) 0 to 65535
Counting mode	
• Position decoder	forwards/backwards
• counter	up
Setpoint input	via program
5–V Decoder input (15–pin subminiature D connector)	
Input signals	differential signals to RS 422
• position decoder	A A–N, B B–N, R R–N
• counter	A A–N
Counting frequency	max. 500 kHz
Cable length (shielded)	max. 50 m (165ft)
Power supply for decoder	5 V from L+ via voltage transformer
Output current	max. 300 mA short–circuit–proof

24–V Decoder Input (15–pin subminiature D connector)	
Rated input voltage	24 V DC
Input signals • position decoder • counter	 A, B, R A
Input voltage • “0” signal • “1” signal	 –33 to +5 V DC +13 to +33 V DC
Rated input current for “1” signal	typ. 8.5 mA
Counting frequency	max. 25 kHz
Cable length (shielded)	max. 100 m
Power supply for decoder	24 V from L+ (PTC thermistor)
Output current	max. 300 mA short–circuit–proof
Digital Inputs (Reference and enabling)	
Rated input voltage	24 V DC
Input voltage • “0” signal • “1” signal	 –33 to +5 V DC +13 to +33 V DC
Rated input current for “1” signal and at 24 V	typ. 8.5 mA
Input frequency	max. 100 Hz
Inherent delay	typ. 3 ms (1.4 to 5 ms)
Cable length (unshielded)	max. 100 m (330 ft)

Digital Outputs (Setpoints 1 and 2)	
Output current (resistive, inductive load)	5 mA to 0.5 A
Residual current for “0” current	max. 0.5 mA
Switching current for lamps	0.22 A (5 W)
Limitation of inductive interrupting voltage to	– 15 V
Output voltage • “1” signal • “0” signal	 min. L+ (– 2.2 V) max. 3 V
Cable length (unshielded)	max. 100 m
Short–circuit protection (cable impedance up to max. 15 Ω)	electronic
Short–circuit indication (short–circuit to M)	red LED
Supply voltage L+ • rated value • ripple V_{pp} • permissible range (including ripple)	 24 V DC max. 3.6 V 20 to 30 V DC
Fuse (internal)	T 5 A
Current consumption • from L+ without decoder supply without load • internal (+9 V)	 30 mA 70 mA
Power loss of the module	typ. 1.9 W + total output current $(I_A) \times 1.1$ V
Weight	approx. 250 g (9 oz.)

Function

The counter module can be used as an up–counter or as an up/down counter for a position decoder.

The counting pulses are supplied by a sensor that you can connect to the 15–pin subminiature D female connector of the module. You can choose from two types of sensors that fulfill the following requirements:

- 5 V error voltages according to RS 422 (up to 500 kHz) or
- 24 V signals (up to 25 kHz).

As additional inputs, the module has an enable input and a reference input.

By using the STEP 5 program, you can assign two setpoints via the I/O bus. These setpoints are output to channels 0 and 1 in the I/O slot for the module. Once the counter status reaches one of these values, the respective output completes the circuit at the terminal block (Q0 or Q1). The status of the outputs is displayed in the diagnostics byte.

You can also read the following values by using the STEP 5 program:

- The updated count
- The diagnostics byte

You can preselect the following items on the operating mode switch (see Figure 9-7):

- Function mode (COUNTER/POSITION DECODING)
- Position resolution (X1, X2, or X4)
- Input voltage range of the sensor (5 V DC or 24 V DC)

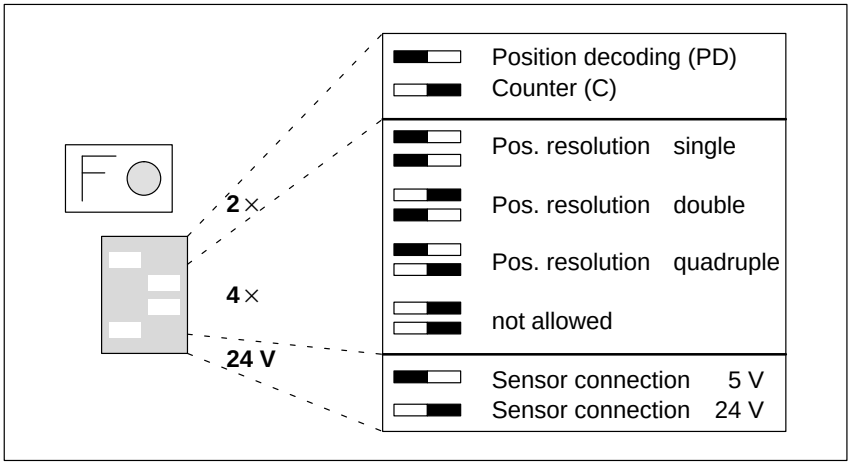

Figure 9-7 Switch Positions on the Operating Mode Switch of the Counter Module

Installation

Installing and Removing the Module

You install the counter module on a bus unit like other I/Os.

Set the coding key to number 6 on the bus unit.

Disconnect the 24 V DC power supply (terminals 1 and 2 of the terminal block) before connecting or disconnecting the transducer cables.

Caution

Damage to sensor. Can cause minor property damage. Do not connect or disconnect the 5 V DC transducer cable while the module is energized.

Connect pulse and position sensors on the front panel by means of a 15–pin sub–D connector (see Figure 9-8). The module can supply the sensors (5 V DC or 24 V DC).

Basically, you can connect all sensors if they fulfill the requirements of the system signals and supply voltage. You cannot connect sensors with OPEN–COLLECTOR outputs to the module.

The shield connection of the sensors must be connected to the metallic front connector cover.

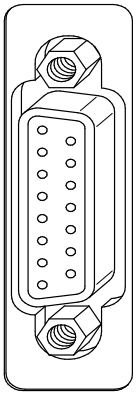

Pin	Assignment
1	5 V Supply Voltage
2	5 V Sensor Line
3	Ground
4	
5	
6	Rectang. Wave Sign. A–N (5 V)
7	Rectang. Wave Signal A (5 V)
8	Supply Voltage (24 V)
9	Rectang. Wave Signal B (5 V)
10	Rectang. Wave Sign. B–N (5 V)
11	Reference Pulse R (5 V)
12	Reference Pulse R–N (5 V)
13	Rectang. Wave Signal A (24 V)
14	Rectang. Wave Signal B (24 V)
15	Reference Pulse R (24 V)

Figure 9-8 Pin Assignment of the 15–Pin Sub–D Female Connector of the Counter Module

- Figure 9-9 shows how to connect counting pulse sensors for a 5 V differential signal to RS 422A.

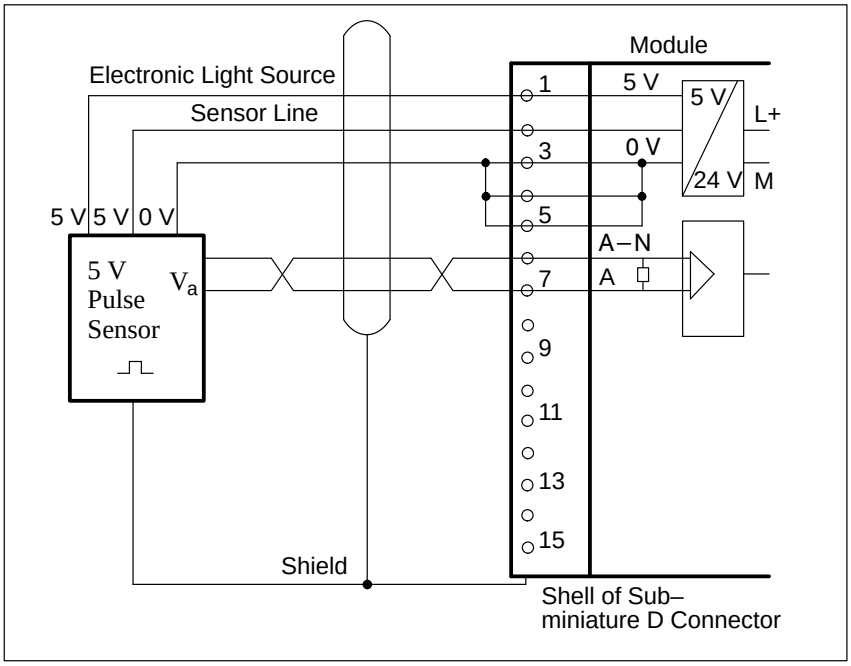

Figure 9-9 Connecting a Counting Pulse Sensor for 5 V Differential Signal to RS 422

- Figure 9-10 shows how to connect a counting pulse sensor for 24 V DC.

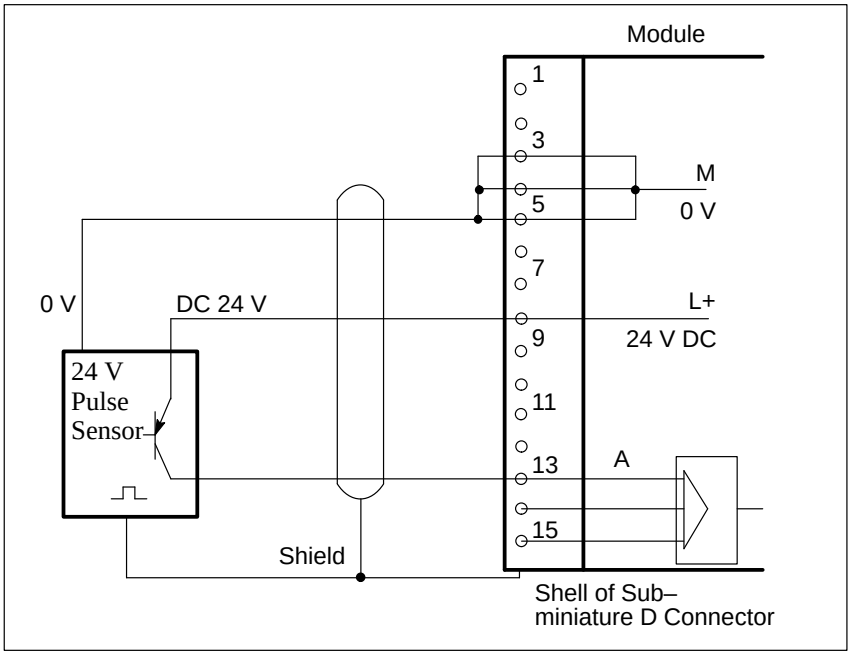

Figure 9-10Connecting a Counting Pulse Sensor for 24 V DC

- Figure 9-11 shows how to connect a 5 V DC position sensor to RS 422A.

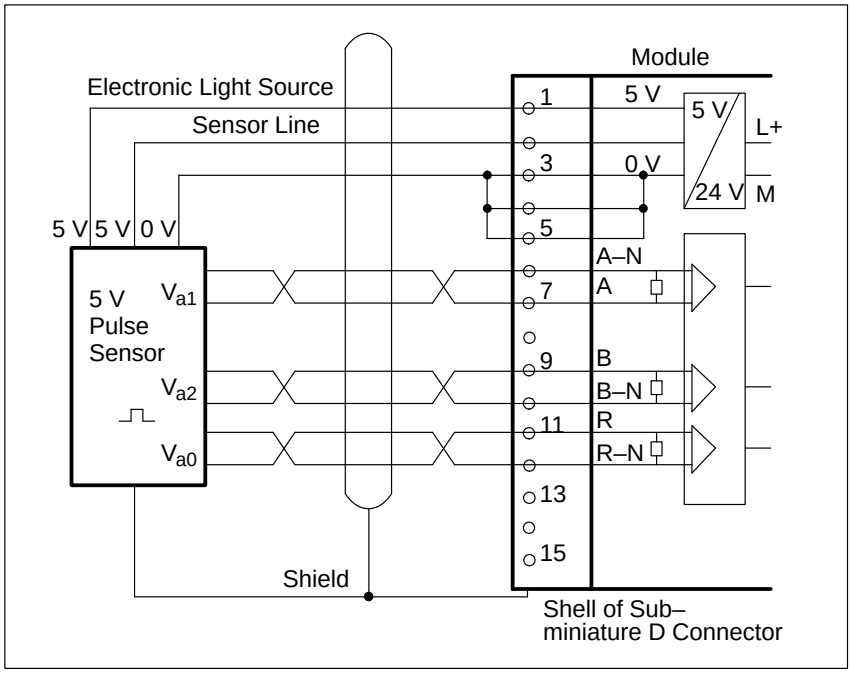

Figure 9-11Connecting a 5 V Position Sensor to RS 422A

- Figure 9-12 shows how to connect a 24 V DC position sensor.

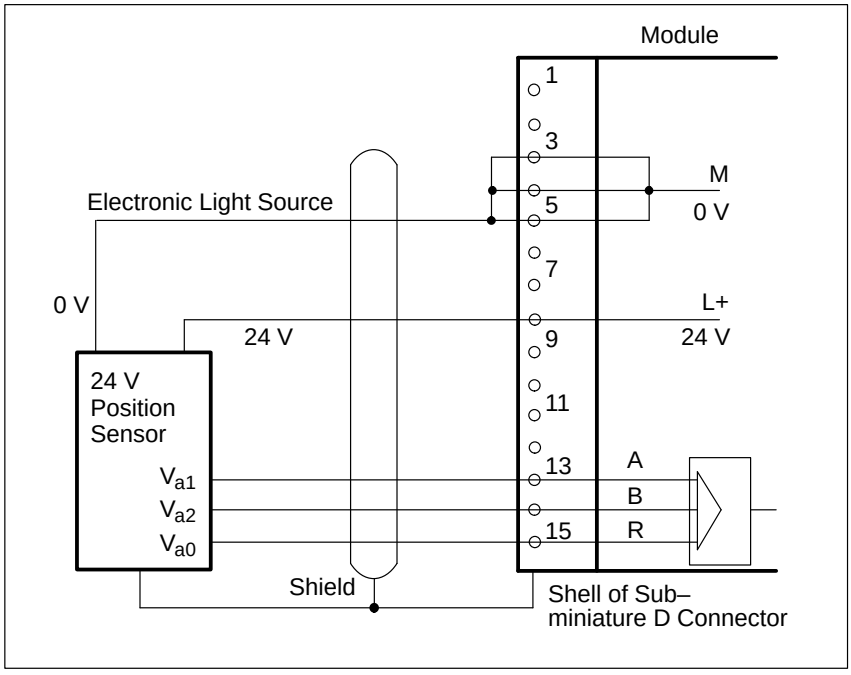

Figure 9-12 Connecting a 24 V DC Position Sensor

The sensor signals to the module inputs must satisfy the following requirements:

- Signal sequence for up–counting

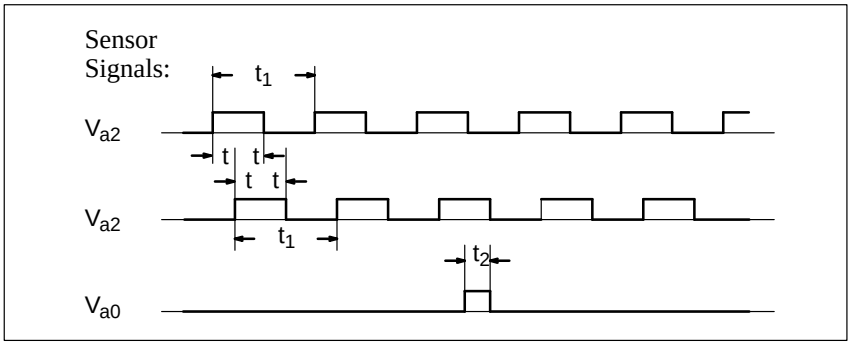

Figure 9-13 Signal Sequence for Up–Counting

- Pulse time of the sensors

	5 V Sensors	24 V Sensors	Pulses
t	≥ 500 ns	≥ 10 µs	V_{a1} = Position decoder count pulses (A)
t_1	≥ 2 µs	≥ 40 µs	V_{a2} = Position decoder count pulses (B)
t_2	≥ 500 ns	≥ 10 µs	V_{a0} = Position decoder ref. pulses (R)

- Minimum edge steepness

Voltage	Description	Minimum Edge Steepness
5 V	Differential signals according to RS 422A (A, A–N, B, B–N, R, R–N):	5 V / µs
24 V	Count pulses and reference pulse (A, B, R):	0,3 V / µs
24 V	Enable and reference signal:	0,3 mV / µs

You can connect proximity switches (contacts, two–wire BERO proximity limit switches) to the inputs on the terminal block (see Figure 9-14).

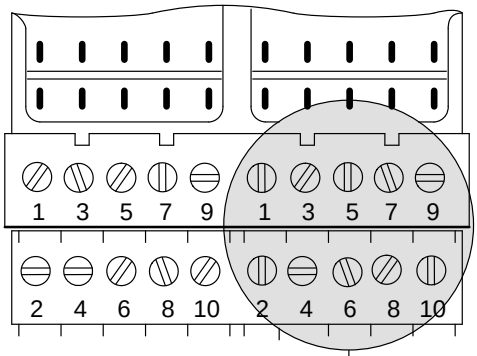

Terminal	Terminal Assignment
1	24 V DC Supply for the Module
2	Ground
3	24 V DC Supply for Enable Signal
4	DI Enable Signal
5	DQ 24 V / 0.5 A Setpoint 1 (Q0)
6	Ground
7	24 V DC Supply for Reference Signal
8	DI Reference Signal
9	DQ 24 V / 0.5 A Setpoint 2 (Q1)
10	Ground

Figure 9-14Assignment Diagram for the Terminal Block

- Assignment of Inputs on the Terminal Block

  You can connect two–wire BERO proximity limit switches to the reference input. The enable input can also be driven by a 24 V DC digital output module.

- Outputs on the Terminal Block

  There are two short–circuit protected 24 V DC digital outputs on the terminal block.

- Short–Circuit Indication

  The red LED on the front panel indicates a shorted output.

Load operations transmit a diagnostics byte and the actual value to the CPU in the master station (see Table 9-1).

Table 9-1 Sending Data from the Counter Modules to the CPU

Byte 0	Byte 1	Byte 2	Byte 3
irrelevant	Diagnostics Byte	Actual Value	
		High–Order Byte	Low–Order Byte

(Byte 0 = module address)

The control program uses transfer operations to transmit two setpoints to the counter module (see Table 9-2).

Table 9-2 Sending Data from the CPU to the Counter Module

Byte 0	Byte 1	Byte 2	Byte 3
Setpoint 1		Setpoint 2	
High–Order Byte	Low–Order Byte	High–Order Byte	Low–Order Byte

(Byte 0 = module address)

- **Diagnostics Byte (Byte 1)**

  The diagnostics byte is byte 1 of the first input word. Byte 0 has no significance.

  The diagnostics byte provides information on the following items (see also Figure 9-15).

  – Preset position resolution

  – Preset mode

  – The reaching of setpoints

  – Signal status of the sync bit for position decoding

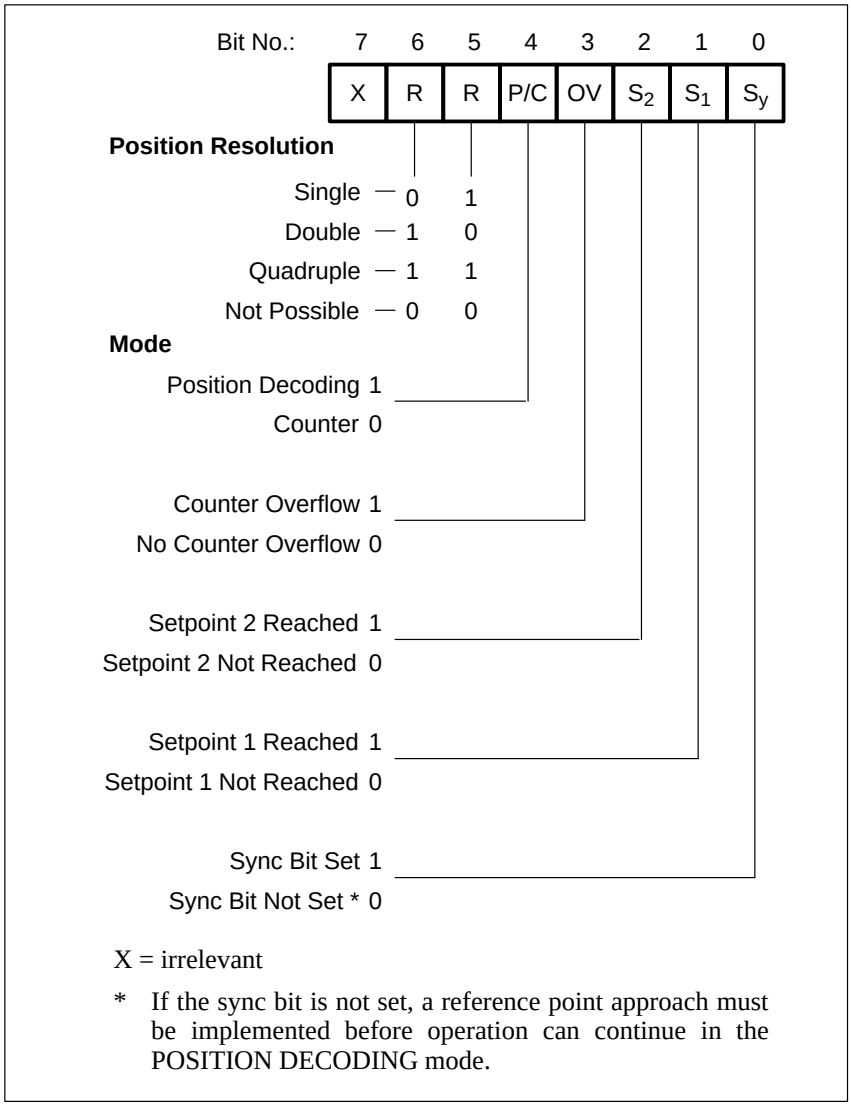

Figure 9-15 Diagnostics Byte

Functional Description of the COUNTER Mode

In the operation mode COUNTER, the module works as a “port–controlled” up–counter and counts the positive edges of the counting pulses while the enable input is high. If the counter reaches a preselected setpoint, the respective output is then enabled.

- **Initial Settings**

On the operating mode switch, make the following selections:

- COUNTER (C)
- Counting pulse signal level (5 V or 24 V)

The position of the switches for position resolution is irrelevant.

For this operation, you need a counting pulse sensor (e.g., BERO). The pulses can be applied as 5 V differential signals according to RS 422A (up to 500 kHz) or as 24 V signals (up to 25 kHz). The sensor is connected to the sub–D interface of the module.

- **Loading Setpoints**

The control program can transfer two setpoints to the module. These setpoints must be in the range of 0 to 65,535.

The transfer of the setpoints via the module depends on whether the “setpoint 1 (setpoint 2) reached“ bit is set in the diagnostics byte.

If the bit is not set, which means the existing setpoint has not been reached or has not been exceeded, the new setpoint is transferred immediately and is immediately valid.

If the bit is set, which means the existing setpoint has been reached or exceeded, the new setpoint is valid only after a positive edge occurs at the enabled input.

If you do not specify a setpoint, a setpoint of 0 applies.

- **Enabling the Counter**

The signal state of the enable input (terminal 3 on the terminal block) determines the function of the counter.

A **positive edge** at the enable input does the following:

- Sets the counter to 0
- Resets the diagnostics bits for “setpoint reached”
- Resets the outputs
- Enables the counter

Note

The enable input should be set to 1 only after the setpoint has been transferred. Otherwise, the outputs are enabled automatically when the first positive edge occurs.

- **Disabling the Counter**

A **negative edge** at the enable input disables the counter. The outputs, diagnostics bits, and the counter are not reset. You can continue reading the current count. A positive edge at the enable input resets the outputs and the diagnostics bytes.

- **Reaching the Setpoints – Setting the Outputs – Resetting the Outputs**

If setpoints have been preselected and the counter is enabled, the module counts the positive edges at the counter input. The count is incremented by 1 with every leading edge.

After setpoint 1 has been reached, output Q0 is enabled. At the same time, status bit S1 is set. After setpoint 2 has been reached, output Q1 is enabled. At the same time, status bit S2 is set.

As long as the enable input is active, the counter counts the pulses. After the enable command has been cancelled, the counter is disabled. The actual value remains constant.

You can read the current count in the STEP 5 program. The actual value is displayed as an unsigned whole number and must be in the range of 0 to 65,535.

Note

If no setpoint is preselected, the respective value 0 is assigned. The corresponding output is enabled with the positive edge of the enabled input.

Example

Figure 9-16 shows how setpoints S1 = 2 and S2 = 4 are entered into the counter.

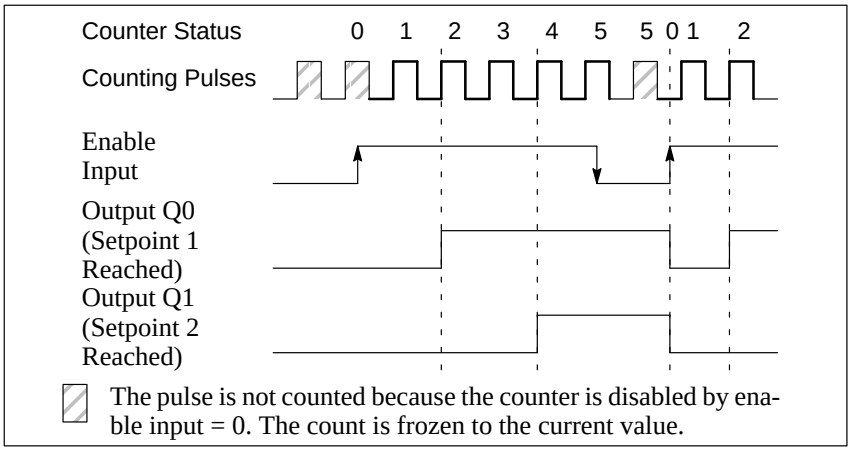

Figure 9-16Switching the Outputs Dependent on the Status of the Counter and the Enable Input

When the ET 200U interface module goes from RUN to STOP, outputs Q0 and Q1 are reset.

- **Performance during Overflow**

If the enabled counter exceeds the counter range limit of 65,535, the following actions occur:

- Bit 3 (overflow) in the diagnostics byte is set to 1.
- The outputs and diagnostics bits for “setpoint reached” are disabled, but they remain unchanged.

The counting function continues and the actual value is constantly updated. You can continue to read all data from the module in the STEP 5 program as follows:

- The updated count
- The status of the outputs at the time of the overflow (This status remains unchanged until the overflow bit is reset.)
- The set overflow bit

After an overflow, the counter can be reset by one of the following actions:

- A positive edge at the enable input
- A cold restart of the programmable controller (STOP to RUN mode)

Note

After the ET 200U interface module powers up, the outputs remain disabled. These outputs must be enabled by a positive edge at the enable input.

Functional Description of the Position Decoder

In the operation mode POSITION DECODING, the module works as an up–counter/down–counter and counts the pulses of the connected position encoder. Based on the phase offset of the two decoder signals A and B, the counter determines the counting direction. If the counter reaches a preselected setpoint, the respective output is then turned on.

Settings

Set the following items on the operating mode switch:

- POSITION DECODING (PD) function
- The desired position resolution (single, double, or quadruple)
- The signal level of the counting pulses (5 V or 24 V)

Connect the sub–D interface female connector to an incremental position encoder that has to deliver the following signals:

- Two counting pulses offset by 90 degrees
- A reference pulse

The pulses can be supplied as 5 V differential signals according to RS 422 (up to 500 kHz) or as 24 V DC signals (up to 25 kHz).

Connect a switch to the enable input. This switch must deliver a 24 V signal. In the same way, the reference pulse has to deliver a 24 V signal to the reference input.

Position Resolution:

- Counter capacity

  The 16–bit up/down counter permits a resolution of 65,536 units between – 32768 and +32767. The traversing range depends on the resolution of the position encoders.

- Pulse evaluation

  The counting pulses, which are offset by 90 degrees, can be subjected to single, double, or quadruple evaluation. The necessary setting is made on the operating mode switch (see Figure 9-7).

  The accuracy of the traversing path increases accordingly if double or quadruple pulse evaluation is used. However, the traversing range then available is reduced by a factor of 2 or 4 (see Table 9-3).

Table 9-3 Pulse Evaluation

	Single Evaluation	Double Evaluation	Quadruple Evaluation
Counting Pulse A Counting Pulse B Count	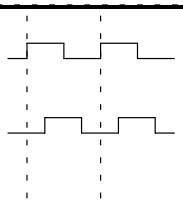	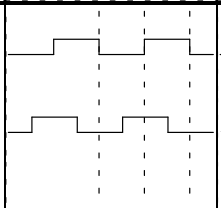	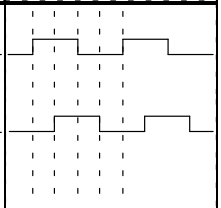

Example

A rotary incremental position encoder produces 1000 pulses per revolution.

The spindle has a pitch of 50 mm/revolution. The position encoder therefore produces 1000 pulses for a traversing path of 50 mm (1 revolution).

The resolution of the encoder is therefore 50 mm/1000 pulses.

The counter can handle up to 65,536 pulses. With the above resolution, the traversing ranges shown in Table 9-4 are obtained.

Table 9-4 Sample Traverse Range

Pulse Evaluation	Single	Double	Quadruple
Traversing Range	3.25 m	1.625 m	0.81 m
Distance Travelled/ Pulse	50 µm	25 µm	12.5 µm

- **Loading Setpoints**

In the STEP 5 program, two setpoints can be transferred to the module. These setpoints must lie between – 32768 and +32767.

The acceptance of the setpoints by the module depends on whether the “setpoint 1 (setpoint 2) reached” bit has been set in the diagnostics byte.

If the bit is not set, which means the existing setpoint is not reached or not exceeded, the new setpoint is immediately accepted and is immediately valid.

If the bit is set, which means the existing setpoint is reached or exceeded, the new setpoint is not valid until a positive edge occurs at the enable input.

If you do not specify a setpoint, a setpoint of 0 applies.

- **Synchronization of Actual Value Detection (Reference Point Approach)**

The synchronization of actual value detection is necessary after power–up and after a counter overflow.

Synchronization performs the following functions:

- Sets the count (actual value) to 0 and
- **Sets** the **SYNC bit** (bit 0 in the diagnostics bit) after power–up

  or

- **Resets** the **overflow bit** (bit 3 in the diagnostics byte) after an overflow

The following factors are prerequisites for synchronization:

1. The reference signal

   The sensor for the reference signal is connected to terminals 7 and 8 of the terminal block.

   Synchronization is enabled with a **leading edge** (transition from 0 to 1) at terminal 8. If the signal was already on 1 when the module was switched on, then the reference signal must be turned off to restart the synchronization.

   If the reference signal lies in the normal traversing range, the actual value will be constantly resynchronized by the reference signal. To prevent the unwanted resynchronizing, you have to mask out the reference signal after the first reference point approach.

2. Traversing path after a positive edge of the reference signal

   After the reference signal has been reached, the module has to recognize a **positive traversing path** (up–counting) while the reference signal is still active (1). This means you have to input the reference signal with increasing actual value to synchronize the module.

3. Reference pulse (V_{a0}; 0 mark of the sensor)

   The reference pulse is generated by the position encoder at least once per revolution.

   The **first reference pulse** that the module recognizes after a leading edge of the reference signal synchronizes the module. This is also valid if, after the first positive traversing path, the direction is changed and a reference pulse is encountered (see Figure 9-19). If, during post synchronization, the reference point is again passed, then you have to mask out the reference signal after the synchronization reference point approach to avoid resynchronizing the module.

Figures 9-17, 9-18, and 9-19 illustrate different possibilities for a reference traversing path.

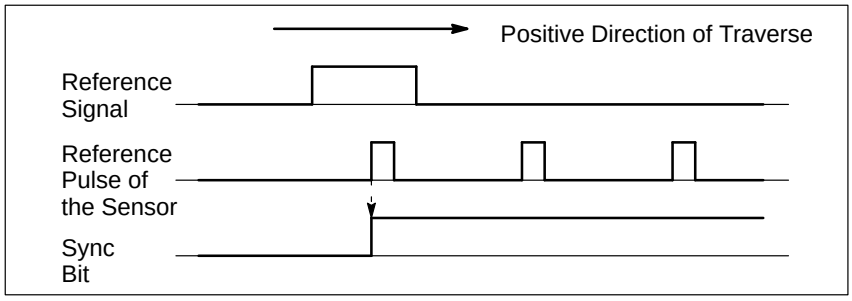

Figure 9-17 Position of the Reference Point (SYNC Bit 0=1) within the Reference Signal Range

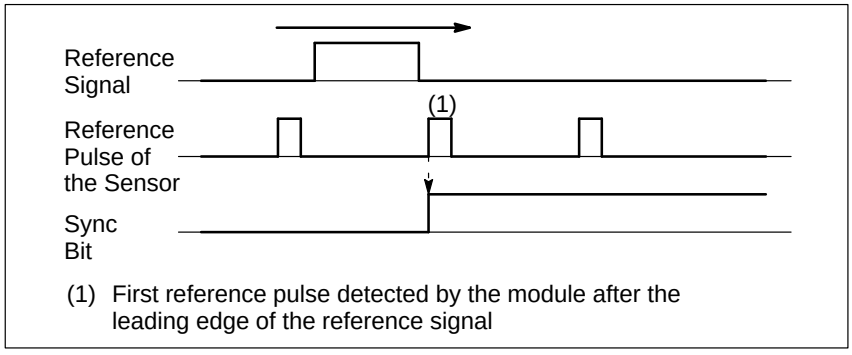

Figure 9-18 Position of the Reference Point (SYNC Bit=1) after the Reference Signal

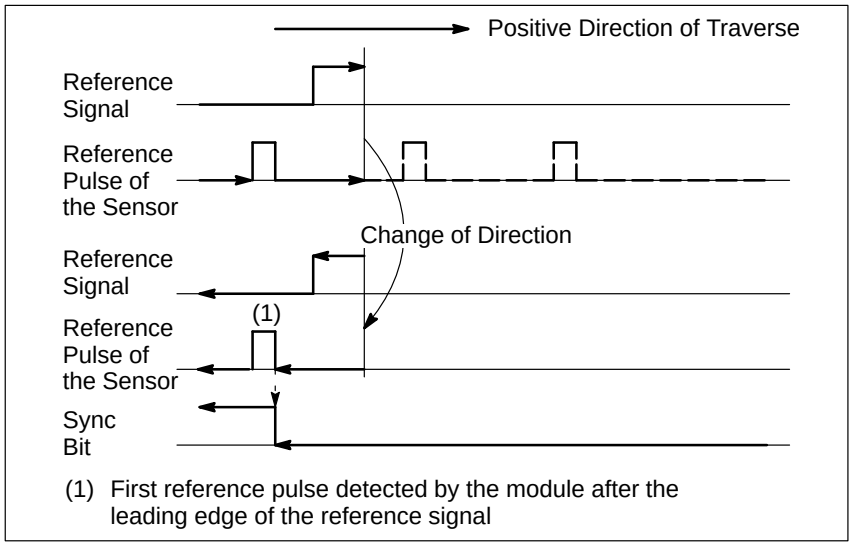

Figure 9-19 Position of the Reference Point (SYNC Bit=1) during a Reversal of Direction before Reaching the Reference Pulse in a Positive Direction

Example

A conveyor belt transports objects from point A to point B. A rotary position encoder is used, together with a BERO proximity switch as reference transmitter. The conveyor belt is marked at a definite point. As soon as this mark comes within the range of the BERO, the BERO produces a reference signal.

Following the reference point approach, the enable input is set via a digital output module (see Figure 9-20).

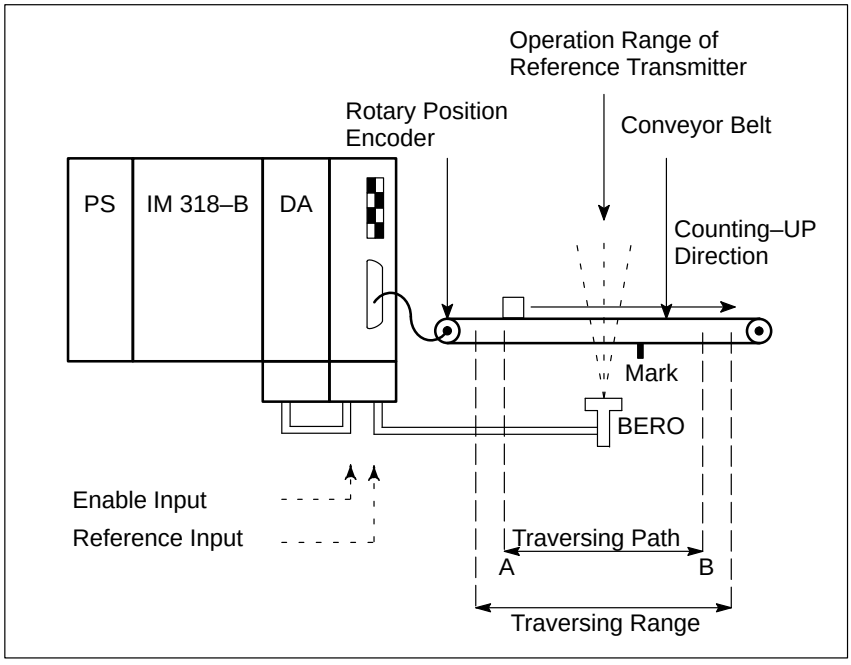

Figure 9-20 Schematic of a Reference Point Approach Operation

- **Starting the Counter**

The counter is reset and started by setting the SYNC bit in the diagnostics byte during the reference point approach operation. The active pulses are counted according to the rotation direction of the position encoder. The count value is incremented during a positive count direction, and decremented during a negative count direction.

- **Enabling the Outputs – Reaching the Setpoints – Resetting the Outputs**

A positive pulse edge at the enable input enables the two outputs for switching.

An output and the associated diagnostics bit “setpoint reached” are set if all of the following statements are true:

- The position decoder was synchronized (SYNC bit = 1 and overflow bit = 0).
- The enable signal (terminal 3 on the terminal block) is set to 1.
- The actual value corresponds to the selected setpoint.

  The setpoint can be reached in the up–count or down–count direction.

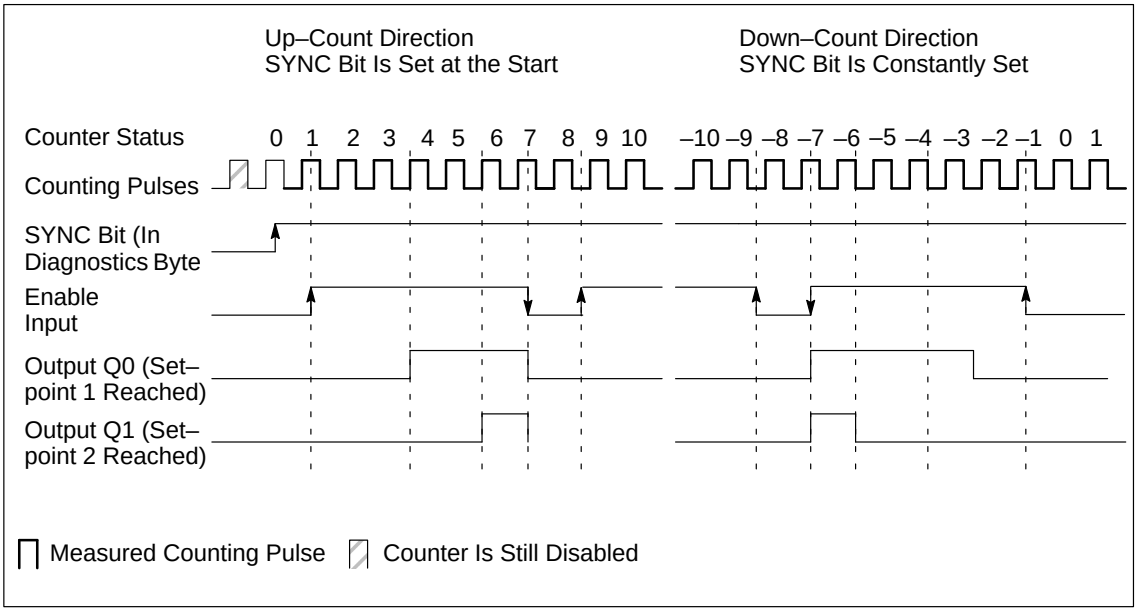

Figure 9-21 Enabling the Outputs – Reaching the Setpoints – Resetting the Outputs

After reaching setpoint 1, output Q0 is energized and status bit S1 is set. After reaching setpoint 2, output Q1 is energized and status bit S2 is set.

As long as the enable input is active, the outputs are switchable through the module. If the enable command is cancelled, the outputs are switched off and the diagnostics bits are reset. The current actual value is still being measured and incremented or decremented depending on the direction of rotation.

You can read the current count in the STEP 5 program. The actual value is displayed as a signed whole number in two's complement and lies in the range of – 32768 to + 32767.

Note

Before you enable the outputs to be switched on by setting the enable input to 1, make sure the following conditions exist:

- The SYNC bit = 1.
- The overflow bit = 0.
- Both setpoints were transferred.

If you ignore these prerequisites, the outputs are switched on directly when the actual value = 0.

If the actual value = 0, the outputs are turned on. The diagnostics bit and the output are reset with the "0" signal at the enable input.

Outputs Q0 and Q1 are also reset when the programmable controller goes from RUN to STOP.

The following examples show the switching on of the output at the selected setpoint. Following are the three possibilities:

- Reaching the setpoint in the direction of a rising actual value
- Reaching the setpoint in the direction of a falling actual value
- Reaching the setpoint in the direction of a rising actual value, then a reversal of direction and a reapproaching of the setpoint in the opposite direction.

Example

Figure 9-22 illustrates approaching a setpoint in an up–count direction.

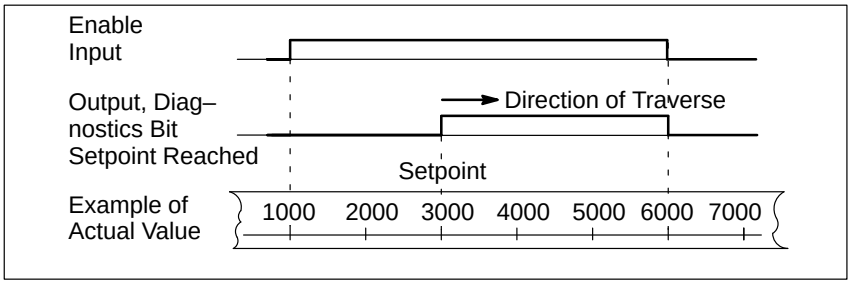

Figure 9-22 Approaching a Setpoint in Up–Count Direction

The actual values have the following significance:

- With actual value = 1000, the enable input is set to 1.
- With actual value = 3000, the setpoint is reached, output and diagnostics bit “setpoint reached” are set.
- With actual value = 6000, the enable input is set to 0, output and diagnostics bit are reset.

Example

Figure 9-23 illustrates approaching a setpoint in a down–count direction.

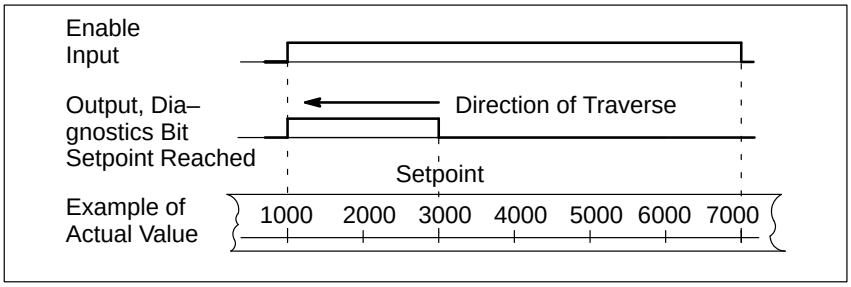

Figure 9-23 Approaching a Setpoint in Down–Count Direction

The actual values have the following significance:

- With actual value = 7000, the enable input is set to 1.
- With actual value = 3000, the setpoint is reached, the output and the diagnostics bit “setpoint reached” are set.
- With actual value = 1000, the enable input is set to 0, the output and the diagnostics bit are reset.

Example

Figure 9-24 illustrates reversal of direction after approaching a setpoint.

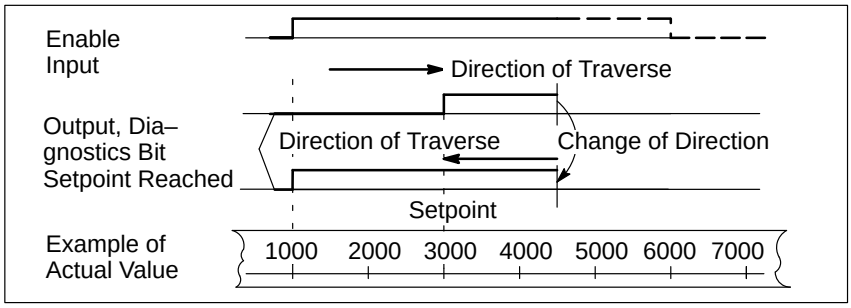

Figure 9-24 Approaching a Setpoint in Up–Count Direction and Subsequent Reversal of Direction

The actual values have the following significance:

- With actual value = 1000, the enable input is set to 1.
- With actual value = 3000, the setpoint is reached, the output and the diagnostics bit “setpoint reached” are set.
- With actual value = 4500, the traversing path is reversed.
- With actual value = 1000, the enable input is set to 0, the output and the diagnostics bit are reset.

Note

Set outputs can be reset only via a “0” signal to the enable input.

- **Performance during Overflow**

If the counter leaves the counting range of – 32768 to + 32767, then the following occurs:

- Bit 3 (overflow) in the diagnostics byte is set to 1.
- The outputs of the counter module are disabled.

The enable input (terminal 4 of the terminal block) must be set to 0 to switch off active outputs.

After an overflow, you need to execute a new reference point approach operation for synchronization of the actual value detection. After reaching the synchronization, bit 3 in the diagnostics byte is again set to 0, and the outputs along with the active enable input can be turned on.

Note

During an overflow, active outputs are not switched off, and the SYNC bit (bit 0 in the diagnostics byte) is not reset.

Entering New Setpoints for the Counter and Position Decoder

You can always enter new setpoints via the PIQ. However, a setpoint is only valid if the respective output is not switched on. You can use diagnostics bits S1 and S2 to display the status of the outputs.

The significance of the diagnostics bits is as follows:

Diagnostics bit S1 (bit 1 in the diagnostics byte) = 1: setpoint 1 is reached and output 1 is switched on.

Diagnostics bit S2 (bit 2 in the diagnostics byte) = 1: setpoint 2 is reached and output 2 is switched on.

Table 9-5 shows the reaction of the counter module during transfer of the setpoints.

Table 9-5 Reaction of the Counter Module during Transfer of the Setpoints

Diag. bit	Response
S1 = 0 S2 = 0	New setpoint 1 is transferred and is valid immediately. New setpoint 2 is transferred and is valid immediately.
S1 = 1 S2 = 1	New setpoint 1 only becomes active if a positive edge has appeared at the enable input. New setpoint 2 only becomes active if a positive edge has appeared at the enable input.

Example

You want to control a drive by using the outputs of the counter module. After a run of positioning, both setpoints are reached and both outputs are turned on. You can enter the new setpoints by using the sequence shown in Figure 9-25. The circled numbers are explained following the figure.

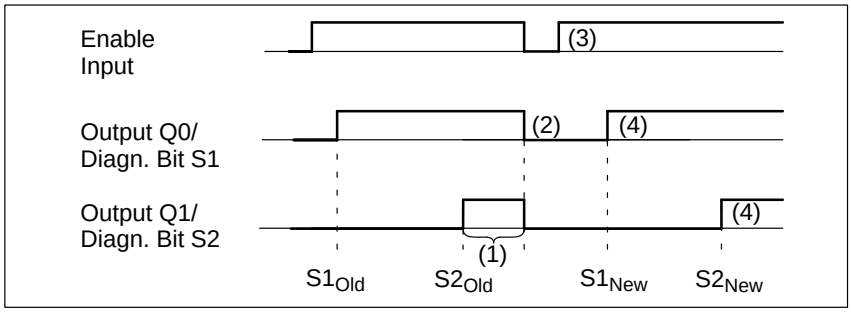

Figure 9-25 Requirement for New Setpoint

1. Transfer the new setpoints to the module. Since both diagnostic bits S1 and S2 are set to 1, the actual values are **not yet accepted**.
2. Switch the signal now at the enable input to 0. With the falling edge, the outputs are switched off and the diagnostics bits are reset.
3. Switch the signal at the enable input again to 1. The new **setpoints are accepted and are now active**.
4. After reaching the new setpoints, the respective output is turned on again.

Addressing

The counter module is addressed like a two–channel analog module (ID 2AX).

Example

Meaning of the bytes of a slot address (slot 1 with module address 72)

Table 9-6 Meaning of the Bytes of a Slot Address

Byte Number	Byte Address	Meaning in PII	Meaning in PIQ
0	72	Irrelevant	High Byte (Set–point 1)
1	73	Diagnostics Byte	Low Byte (Set–point 1)
2	74	High Byte (Actual Value)	High Byte (Set–point 2)
3	75	Low Byte (Actual Value)	Low Byte (Set–point 2)

Example

Data Exchange between the Programmable Controller and the Counter Module

1. The counter module has module start address 96. If you now wish to check whether your system for position decoding has been synchronized by a reference point approach, you must scan the sync bit in the diagnostics byte (bit 0). If this bit is set, a branch is to be made to FB20. The position decoding operation is started in FB20.

STL	Description

`L PW 96`
`T IW 96`
`A I 97.0`
`JC FB 20`
	Read in bit 0 of the diagnostics byte (sync bit).
	If this bit is set, a branch is made to FB20.
	If the bit is not set, program scanning is continued with the statement following the block call.

2. You want to transfer the setpoints stored in flag words 0 and 2 to the counter module inserted with module start address 120. The module will not accept the setpoints until the old setpoints have been reached or exceeded.

STL				Description
	...			
	AN	I	121.1	If setpoint 1 has not yet been reached
	JC	=L001		(bit 1=0), a branch is made to label 1.
	L	FW	0	
	T	QW	120	Read in setpoint 1 and transfer it to the counter module.
L001	AN	I	121.2	If setpoint 2 has not yet been reached
	JC	=L002		(bit 2=0), a branch is made to label 2.
	L	FW	2	Read in setpoint 2
	T	QW	122	and transfer it to the counter module.
L002	BE			Block end
	. . .			

9.7 Closed–Loop Control Module IP 262 (6ES5 262–8MA12) (6ES5 262–8MB12)

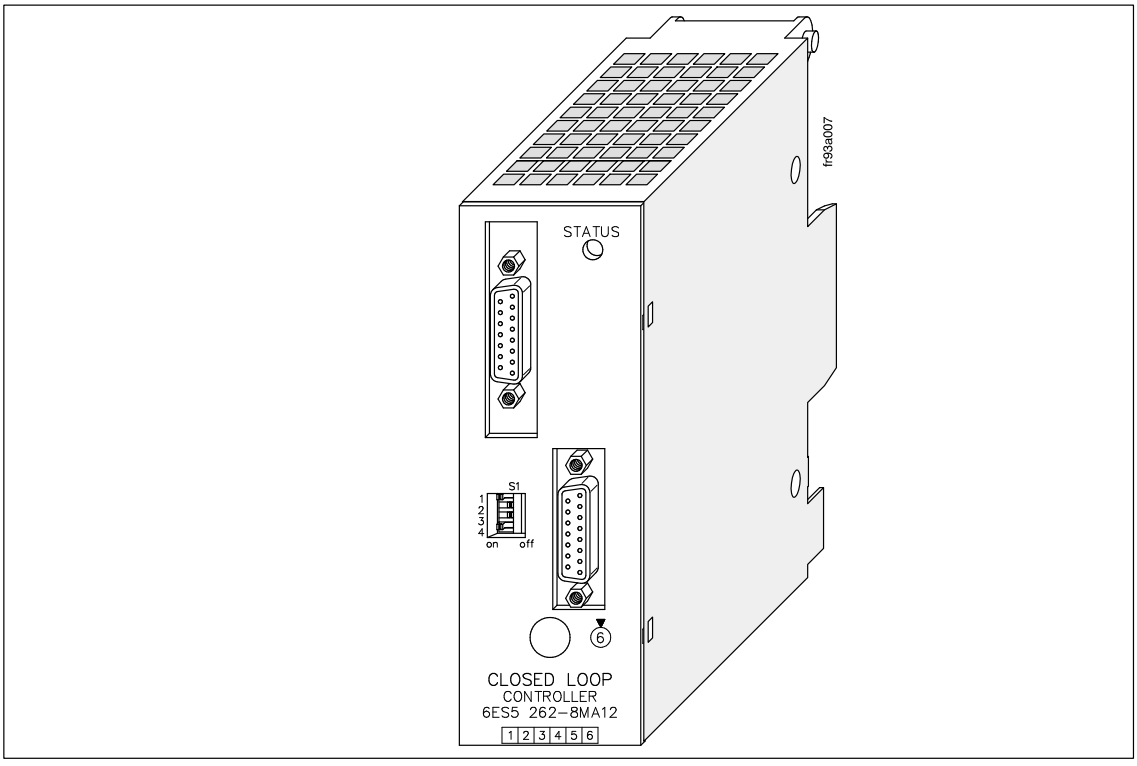

Technical Specifications	
Address ID for ET 200U	
• DP Siemens	223
• DP Standard	4AX or 243
General Specifications	
Input voltage	
• Rated value	24 V DC
• Permissible range	18 to 34 V DC
• Permissible range with the PG 605/OP 393	18 to 27 V DC
Current consumption	
• Internal(from the CPU, 9 V)	approx. 20 mA
• External (for 24 V; without load)	approx. 180 mA
• External (for 24 V; without load; with PG 605/OP 393)	approx. 340 mA
Ambient temperature	0 to 55 °C (32 to 131 °F)

Controller	
Total cycle time (equals scan time)	100 to 200 ms
Resolution of the open–loop controller	5 ms at 50 Hz 4.2 ms at 60 Hz
Analog Inputs	
Number of inputs	4 (suited for current, thermocouple, or resistance thermometer) Voltage with external switching
Additional input for reference temperature	1 (resistance thermometer)
Galvanic isolation	no
Permissible voltage differences	
• Between inputs	–1 V to +1 V
• Between inputs and central ground point	–1 V to +1 V
Digital representation of the input signal	11 bits + sign

Current input	
• Input signal range	0 to 20 mA or 4 to 20 mA
• Input resistance	24.3 Ω ± 0.1 %
mV Input (for thermocouple)	
Input signal range	0 to 50 mV or –8.9 to 41.1 mV (type J, K, L, S)
Cable impedance	30 Ω per wire
Resistance thermometer	
• Start	18.49 Ω
• End	219.12 Ω
• Permissible cable impedance	30 Ω per wire
Binary Inputs	
Number of inputs	4
Galvanic isolation	no
Signals state “0”	–30 to +4.5 V or open
Signals state “1”	+13 to +30 V (signal state invertible)
Input resistance	approx. 4 kΩ
Analog Outputs of the Constant Controller (6ES5 262–8MA12)	
Number of outputs	3
Galvanic isolation	no
Output signal range	0 to 20 mA or 4 to 20 mA
Maximum permissible load	600 Ω
No load voltage	(L+) – 2 V

Binary Outputs for the Open–Loop Controller (6ES5 262–8MB12)	
Number of outputs	8
Galvanic isolation	no
Signal state “0”	< 1.5 V
Signal state “1”	(L+) – 3.8 V
Maximum load current	100 mA short–circuit proof
Wiring Method	
Programmer (PG) Operator panel (OP) SINEC L1 network connection	front side via 15–pin subminiature D connector
Connectable are	PG 605, PG 730, PG 750, PG 770, OP 393, OP 395
Analog and binary inputs	front side via 25–pin subminiature D connector
Analog and binary outputs	via terminal block of the bus unit

Function

The module is well–suited to take over control–loop tasks in the area of industrial processing technology such as temperature control, pressure and flow control, continuous injection functions, and non–time–critical closed–loop speed controls.

The module relieves the programmable controller from closed–loop control tasks. The IP 262 also works with its own power supply in a stand–alone operation. The module can function independently without a programmable controller and can handle up to four closed–loop control circuits.

The following two interfaces are located on the front panel of the module:

- An interface for connecting a programmer (PG), an operator panel (OP), or the SINEC L1 Network (under development)
- An interface for connecting analog and binary inputs

In addition, the following items are available:

- A selector switch for each channel for current and voltage (thermocouples or PT 100)
- A green status LED with the following indications:
  - Continuously lit, to signify the RUN mode
  - Flashing, to signify a transducer malfunction
  - Off, to signify a transducer malfunction

Additionally, the module offers the following inputs:

- Four analog inputs for direct feed of setpoint and actual values
- Four binary inputs for control variables

Modules

There are two IP 262 modules as follows:

- ...–8MA12 with 3 analog outputs for continuous controllers with analog output signals.
- ...–8MB12 with 8 binary outputs for continuous controllers with pulse time interval signals or for step–action controllers.

For this purpose, you can order a separate manual for working with this module (see Catalog).

Installation

Install the closed–loop control module on a bus unit like any other input or output module.

- The connections for power supply and the analog and binary output signals are located on the terminal block of the bus unit.
- The analog and binary inputs are connected to the module with a 25–pin sub–D female connector.

Addressing

The module is addressed like a four–channel analog module.

Operating Modes

Since transducers and sensors are directly wired to the module, the module can work independently from a programmable controller in stand–alone operation, provided that the setpoints and the 24 V power supply voltage are fed directly to the IP 262. This means that the module executes the control and the output of the control value and can work alone or be controlled via the SINEC L1 by a master unit.

Besides this, the IP 262 has its own backup, which means that the module can continue to work alone in the event the master CPU (e.g., S5–135U with R64) fails. It uses the last setpoint received from the CPU or a predefined back–up setpoint. The following two operating modes are possible:

- DDC Operation (Direct Digital Control)
  The control is executed entirely from the CPU and the IP only outputs the manipulated variable. If the CPU fails, the module can continue to control independently with a predefined back–up setpoint.
- SPC Operation (Setpoint Control)
  The module receives only the setpoint from the CPU; the module carries out the control independently of the CPU. If the CPU fails, the IP continues to control using the last setpoint received from the CPU. It is also possible to use a predefined back–up setpoint here.

Note

Different addresses for inputs and outputs of the IP 262
The IP 262 has an address range of 8 bytes for inputs and 8 bytes for outputs. COM ET 200 assigns addresses for inputs and outputs freely with the result that inputs and outputs of the IP 262 can have different addresses.

Minimum time interval between IP 262 accesses
The IP 262 has a firmware cycle of up to 200 ms. The module can therefore only be accessed at intervals of at least 200 ms.

9.8 IP 263 Positioning Module (6ES5 263–8MA11)

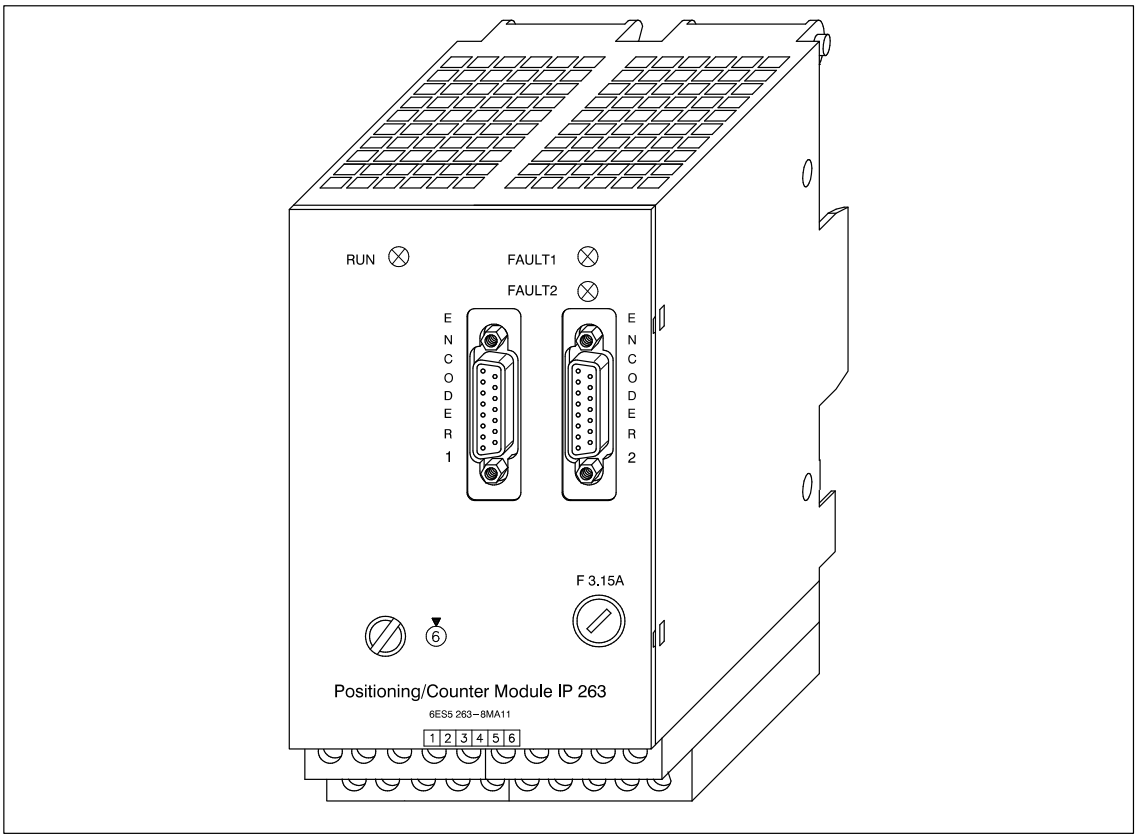

Technical Specifications	
Address ID for ET 200U (requires 2 slots)	
• DP Siemens	223/000
• DP Standard	4AX/000 or 243/000
Microprocessor	
Type	80C32
Clock frequency	16 MHz
Memory	
EPROM	64 Kbytes
RAM	32 Kbytes
EEPROM	1 Kbit

Sensors	
Position decoder	Incremental, absolute (SSI interface)
Maximum traversing range	
• with incremental encoders	2^{24} increments
• with absolute encoders	8192 increments per revolution × 2048 revolutions
Signal voltages	
• Differential inputs	5 V to RS 422
• Asymmetrical inputs	24 V (only incremental sensors)
Supply voltage for sensors (short–circuit–proof, no overload)	5 V / 300 mA 24 V / 300 mA

Input frequency and Cable Length	
Symmetrical sensors (5 V signals):	
• with 5 V sensor supply	max. 200 kHz for 32 m (105 ft) cable, shielded
• with 24 V sensor supply	max. 200 kHz for 100 m (328 ft) cable, shielded
Asymmetrical sensors (24 V signals):	max. 100 kHz for 25 m (82 ft) cable, shielded max. 25 kHz for 100 m (328 ft) cable, shielded
Data transmission rate and cable length with absolute sensors	62.5 kHz (selectable in steps) 125 kHz (160 m/525 ft, shielded) 250 kHz 500 kHz 1 MHz (32 m/105 ft, shielded)
Input signals	
• Incremental	2 pulse trains displaced by 90°, 1 zero pulse
• 24 V initiator (BERO)	1 pulse train
• SSI	Absolute value
Input currents	
• 5 V	to RS 422
• 24 V	typ. 5 mA

Digital Inputs	
Input voltage range	– 3 V to +30 V
Galvanic isolation	No
0 signal	– 3 V to +5 V
1 signal	+13 V to +30 V
Permissible zero–signal current at 0 signal	1.1 mA
Input current at 24 V	typ. 5 mA
Other: If the digital inputs are used, they must always be connected to a defined potential (0 V, 24 V) and must not be kept open.	

Digital Outputs	
Output voltage range	+20 V to + 30V
Galvanic isolation	No
Output current at 1 signal	max. 500 mA
Short–circuit protection	Short–circuit proof output
Cable length, screened	max. 100 m (328 ft)

Supply voltage	
Logic voltage from 24 V external supply produced with switched–mode power supply	4.9 V to 5.1 V
Current consumption from 24 V without outputs and sensor	typ. 120 mA
Undervoltage monitoring	$V_{internal} < 4.65$ V → Hardware reset
Power loss	typ. 4 W

Ambient Conditions	
Operating temperature	0 to 60 °C
Operating pressure	860 to 1080 hPa
Vibration load in operation	0.075 mm at 10 to 57 Hz 1 g at 58 to 500 Hz
Electric shock in operation	15 g, 11 ms half sine
Storage temperature	– 40 to +70 °C
Relative air humidity (storage)	≤ 95 % at T ≤ 25°C
Air pressure during storage	660 to 1080 hPa

Noise Immunity	
Static noise immunity	Up to 2.5 kV (except screw terminals)
Radio–frequency interference	3 V/m
Interference on cables	
• DC voltage supply cables	1 kV
• Signal cables	2 kV

A separate manual is available for the IP 263 positioning module. It can be ordered under the order number 6ES5 998–5SK11.

The IP 263 is suitable for positioning of two independent axes.

Assignments of Outputs

The IP 263 is a two–channel module: 4 digital outputs are assigned to each channel for the control of drives;

- Rapid traverse
- Creep speed
- Anti–clockwise rotation
- Clockwise rotation

Both incremental and absolute encoders (SSI – synchronous serial interface) can be connected for actual position encoding.

They transmit the machine data, such as

- Software limit switches
- Resolution
- Cutoff difference
- Switchover difference
- Zero–speed control

The syntax for the data block which has to be created for this purpose is simple and is described in the manual.

Positioning

The only thing that remains to be done is to specify the desired target and then the module is ready for the positioning procedure.

The IP 263 then carries out positioning automatically. When the target has been reached, it sends a message to the ET 200U interface module and thus to the CPU.

Figure 9-26 shows the positioning procedure with the IP 263: After the start, a rapid traverse towards the target takes place first. When the switchover/cut-off point has been reached, a switch–over to creep speed or cutoff takes place. Afterwards, the IP 263 monitors approach of the target. When the axis has reached the target range, a signal is sent to the ET 200U interface module.

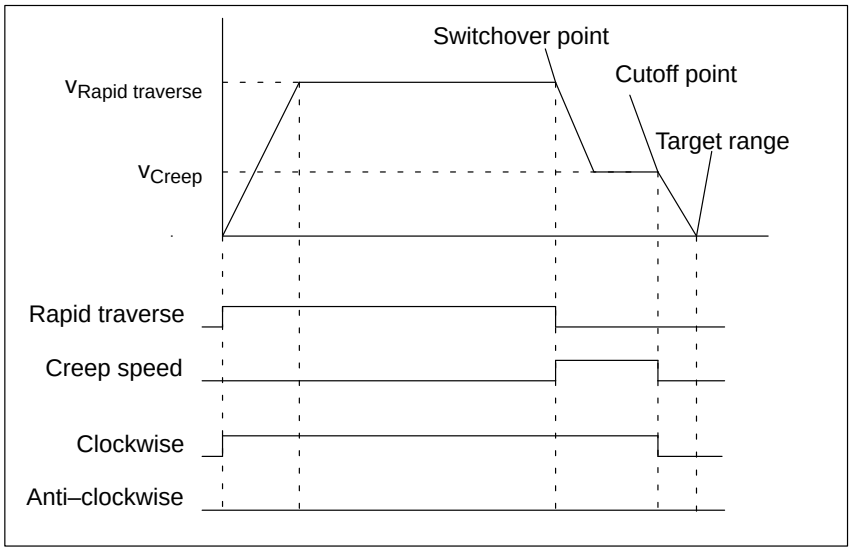

Figure 9-26 Positioning with the IP 263

During reference point travel, the digital input of the module senses the speed reducing cam (reference point switch).

In the “length measurement” operating mode, the module senses sensor pulses as long as this input has a “1” signal.

9.9 IP 264 Electronic Cam Controller Module 6ES5 264–8MA11

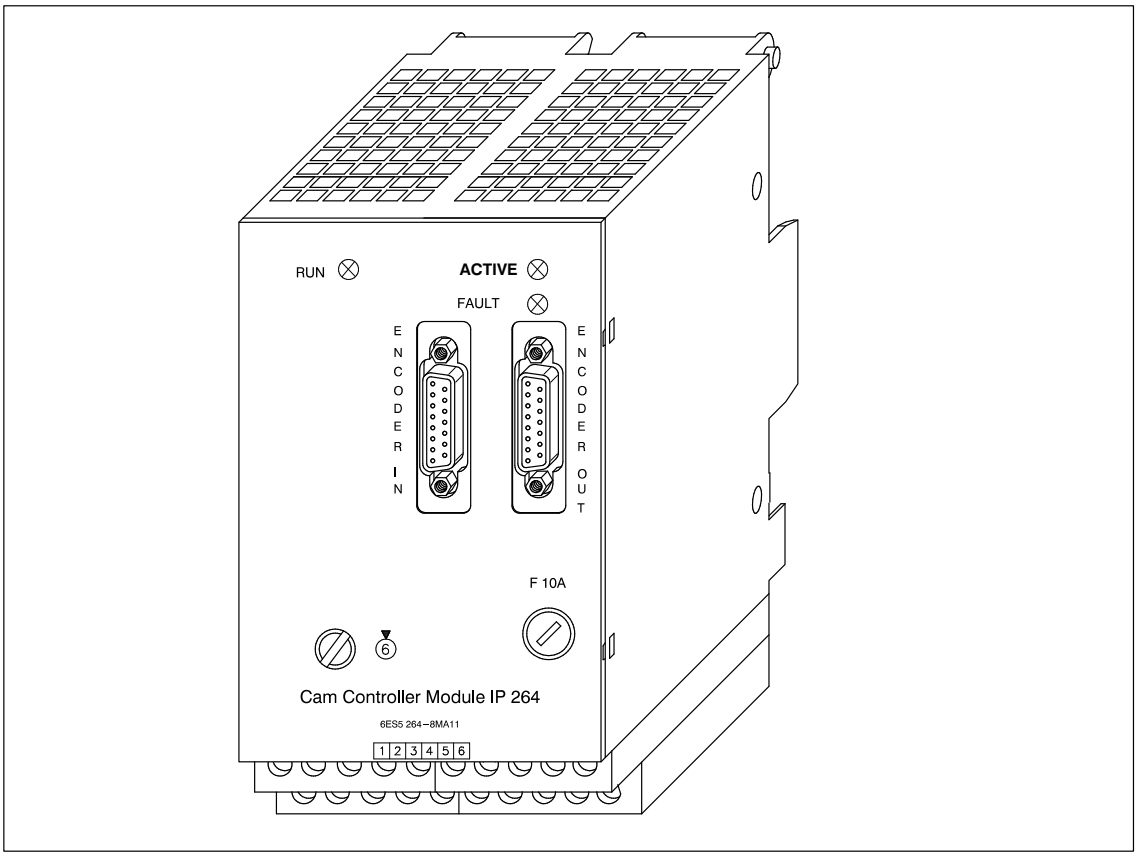

Technical Specifications	
Address ID for ET 200U (occupies 2 slots)	
• DP Siemens	223/000
• DP Standard	4QX/000 or 243/000
Microprocessor	
Type	80C32
Clock frequency	16 MHz
Memory	
EPROM	64 Kbytes
RAM	32 Kbytes
EEPROM	1 Kbit

Encoders	
Actual value sensing	Incremental, absolute (SSI interface)
Max. traversing range	
• with incremental encoders	2^{16} increments
• with absolute encoders	2^{16} encoder incr.
Signal voltages	
• Differential inputs	5 V to RS 422
• Asymmetrical inputs	24 V (only incremental encoders)
Supply voltages for the encoders (short–circuit–proof, no overload)	5 V / 300 mA 24 V / 300 mA

Input Frequency and Cable Length	
Symmetrical encoders (5 V signals):	
• with 5 V encoder supply	max. 200 kHz at 32 m (105 ft) cable, shielded
• with 24 V encoder supply	max. 200 kHz at 100 m (328 ft) cable, shielded
• Asymmetrical encoders (24 V signals):	max. 100 kHz at 25 m (82 ft) cable, shielded max. 25 kHz at 100 m (328ft) cable, shielded
Data transmission rate and cable length with absolute encoders	(selectable in steps) 125 kHz (160 m/525 ft, shielded) 250 kHz 500 kHz 1 MHz (32 m/105 ft, shielded)
Input signals	
• Incremental	2 pulse trains displaced by 90 °C 1 zero pulse
• 24 V initiator (BERO)	1 pulse train
• SSI	absolute value
Input currents	to RS 422
• 5 V	typ. 5 mA
• 24 V	

Digital Inputs	
Input voltage range	– 3 V to +30 V
Calvanic isolation	no
0 signal	– 3 V to +5 V
1 signal	+13 V to +30 V
Permissible zero signal current at 0 signal	1.1 mA
Input current at 24 V	typ. 5 mA
Other: If the digital inputs are used, they must always be connected to a defined potential (0 V, 24 V) and must not be kept open.	

Digital Outputs	
Output voltage range	+20 V to +30 V
Galvanic isolation	no
Output current at 1 signal	max. 300 mA
Short–circuit protection	short–circuit proof output
Cable length, shielded	max. 100 m

Supply Voltage	
Logic voltage from 24 V external supply produced with switched–mode power supply	4.9 V to 5.1 V
Current consumption from 24 V without outputs and sensors	typ. 120 mA
Undervoltage monitoring	V_{intern} < 4.65 V
Power loss	typ. 4 W

Module Cycle Time (incl. dead time compensation)	
Separate cam programs with max. 32 cams each for forwards and backwards (incl. dead time compensation)	57.6 µs
“Common” cam program with max. 32/64 cams for forwards and backwards	57.6 / 115.2 µs

Ambient Conditions	
Operating temperature	0 to 60 °C
Operating pressure	860 to 1080 hPa
Vibration load in operation	0.075 mm at 10 to 57 Hz 1 g at 58 to 500 Hz
Electric shock in operation	15 g, 11 ms half sine
Storage temperature	– 40 to +70 °C
Relative air humidity (storage)	≤ 95 % at T ≤ 25 °C
Air pressure during storage	660 to 1080 hPa

Noise Immunity	
Static noise immunity	Up to 2.5 kV (except screw terminals)
Radio–frequency interference	3 V/m
Interference on cables	
• DC voltage supply cables	1 kV
• Signal cables	2 kV

A separate manual is available for the electronic cam controller. It can be ordered under the order number 6ES5 998–5SL11.

The IP 264 can be used both for rotary and linear axes.

The IP 264 electronic cam controller makes electronic processing of cams economical even for applications in the lower performance range.

32 cams which can be allocated as desired to 16 tracks have a switching accuracy of better than 1 degree at 2400 revolutions per minute. This corresponds to a response time of less than 60 µ. For applications with low precision requirements (2 degrees at 2400 revolutions per minute) it is even possible to program 64 cams.

It is also possible to integrate 32 cams each into a cam program for “forwards” and a cam program for “backwards”. Switchover between these two programs is carried out by automatic direction sensing of the IP 264 or it is controlled by the SIMATIC S5.

All cams can be defined either as path–path cams or as path–time cams.

Dead Time Compensation

Through the speed–dependent, dynamic shift, each individual cam compensates the dead time of the actuator connected (e.g., pneumatic valve) at a scanning rate of 60 µs. This enables the utmost accuracies to be achieved even at changing drive speeds, without complicated adjustments of the STEP 5 program (offset) being required.

Direct Process Connection

In order to be able to pass on the short response time of the IP 264 directly to the process, a digital output (24 V, 0.5 A) is available on the module for each track. Generally, the units to be controlled can be connected directly. Auxiliary contactors are required only for actuators with a higher current consumption.

The sensors to be connected can be incremental encoders, absolute SSI encoders (SSI = synchronous serial interface) or simple 24 V signal sensors (e.g., BEROs). The sensor data can be looped through to further modules via the additional sensor output, without separating the sensor cables mechanically or using additional fan–out units.

9.10 IP 265 High Speed Sub Control (6ES5 265–8MA01)

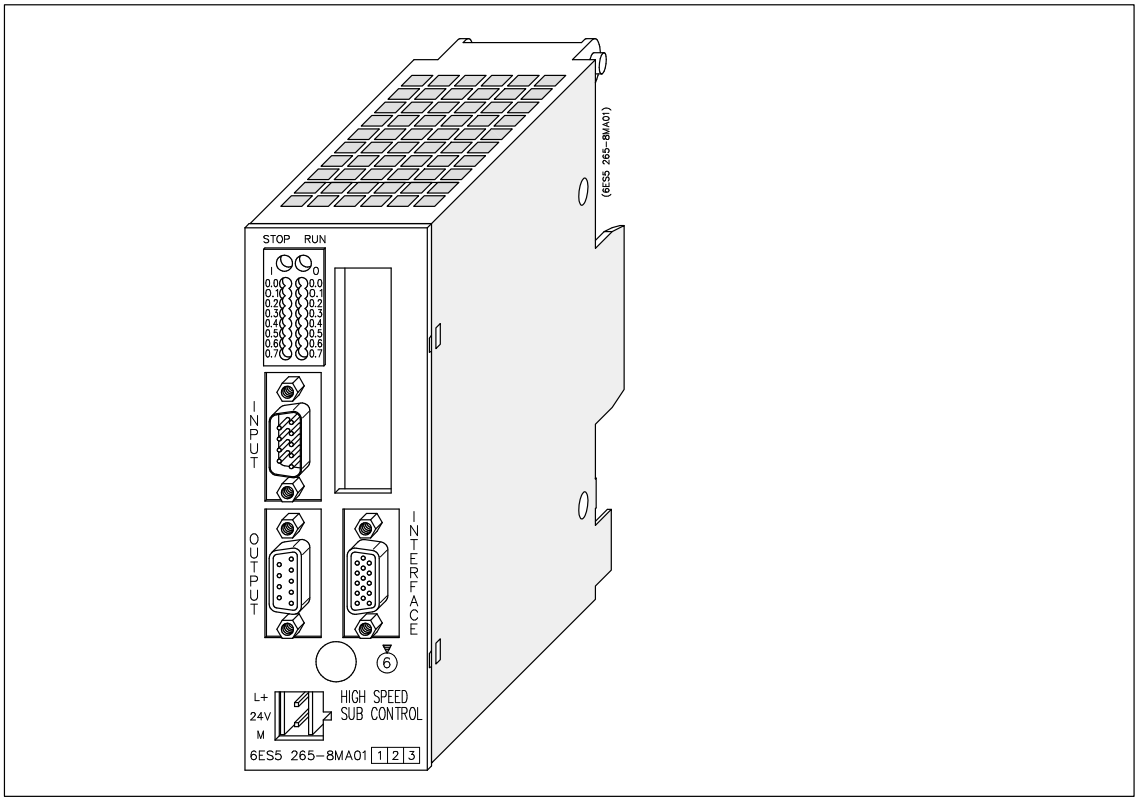

Technical Specifications	
Address ID for ET 200U (The slow mode setting is described in section 4.2.1 and section 5.1.1, figure 5-5)	
• DP Siemens	223
• DP Standard	4AX or 243
Current consumption from +9 V (CPU)	<175 mA
Signal status display	only for 24 V inputs and 24 V outputs (green LEDs)
Operating status display	• STOP (red LED) • RUN (green LED)
Memory submodule	EPROM/EEPROM
Weight	approx. 300g (10.5oz)

Digital 24 V Inputs (9–pin sub D connector)	
Number of inputs	8
Galvanic isolation	no
Status display	Yes, on 5 V side
Input voltage L+	
• Rated value	24 V DC
• for “0” signal	0 to 5 V
• for “1” signal	11 to 30 V (IEC 65A)
Input current at “1” signal	typ. 6.5 mA (IEC 65 A)
Connection of 2–wire BERO	possible (zero signal current 1,5 mA)
Input frequency	max. 10 kHz
Cable length (shielded)	max. 100 m (328 ft)
Delay time of input circuit	
• Rising edge	typ. 15 µs
• Falling edge	typ. 10 µs

5 V Differential Inputs (15–pin sub D HD socket connector)	
Number and type of input signals	3 differential signals to RS 422
Input frequency	max. 58 kHz
Pulse length • "Low" level • "High" level	 min. 8.6 µs min. 8.6 µs
Cable length (shielded)	max. 32 m (105 ft)

Digital 24 V Outputs (9–pin sub D socket connector)	
Number of outputs	8
Galvanic isolation	no
Status display	Yes, on 5 V side
Short–circuit protection	Yes, electronic clock cycle
Load voltage L+ • Rated value • Permissible range	 24 V DC 20 to 30 V
Output current at "1" signal	0.5 A at 60 °C
Permissible total current of output	2 A at 60 °C
Connection of outputs in parallel	possible in pairs ($I_{outp} \times 0.8 \times I_{rated}$)
Output frequency at ohmic load	max. 1 kHz at 15 mA load max. 2 kHz at 50 mA load max. 4 kHz at 500 mA load
Cable length (shielded)	max. 100 m (328 ft)
Lamp load	max. 2 W
Residual current at "0" signal	max. 1 mA
Voltage drop at "1" signal	max. 1 V
Limitation of inductive cut–off voltage	– 15 V
Delay time of output circuit • Rising edge • Falling edge, depending on ohmic load	 typ. 10 µs typ. 150 µs at 15 mA load typ. 90 µs at 50 mA load typ. 70 µs at 500 mA load

Expansion Inputs and Outputs (15–pin D sub HD socket connector)	
Number of inputs and outputs	8 (any desired mixture of I/Os can be configured)

Connector for 24 V Load Voltage (2–pin)	
Permissible cross–sections of cables • Flexible cable H07V–K with end sleeve • Solid cable H07V–U	 0.5 to 1.5 mm^2 0.5 to 2.5 mm^2

The IP 265 High Speed Sub Control is a powerful, user–programmable I/O module which relieves the CPUs of the SIMATIC S5–100 systems of automation tasks which place great demand on speed and reproducibility.

A separate manual is available for the IP 265. It can be ordered under the order number 6ES5 998–5SH11.

Function

The IP 265 High Speed Sub Control is available with a COM software package which is required to determine the function of the module.

The use of the IP 265 in an S5 system enables rapid I/O processing in the millisecond range. By implementation of an FPGA (Field Programmable Gate Array) in the IP 265 it is possible to process process signals in parallel and very fast.

The IP 265 user program consists of elementary basic functions such as logic operations, counters, timers or comparators. The structure of the IP 265 user program is based on the CSF 5 type of representation.

The following can be used:

- Either a user–programmed user program

  or

- A fixed–programmed standard program from Siemens.

The COM 265 is available for user–programming of the IP 265. Besides it being programmable, the IP 265 can also be used to implement the special “counter” function with a fixed–programmed standard program. For this purpose, SIEMENS AG offers a memory submodule for the IP 265 with the standard “counter” function.

The IP 265 user program is automatically processed by the IP 265. It conditions process input signals to process output signals. The IP 265 can read 11 process inputs (8 x 24 V inputs, 3 x 5 V differential inputs) and set 8 process outputs (24 V outputs).

The program capacity of the FPGA and the number of process inputs/outputs of **one** IP 265 are limited. The IP 265 is therefore used for rapid sub controls. By adding one IP 265 to another, complex sub–processes can be controlled with this module.

Installation

As other I/O modules, the IP 265 High Speed Sub Control is mounted on a bus unit.

- The module can be plugged in only at slots 0 to 7.
- The ET 200U distributed I/O station can accommodate a maximum of six IP 265 modules.

Addressing

The module is addressed like a 4–channel analog module.

9.11 IP 266 Positioning Module (6ES5 266–8MA11)

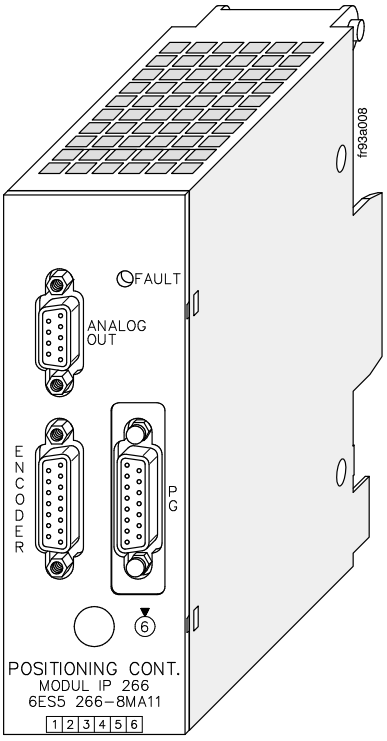

Technical Specifications	
Address ID for ET 200U	
• DP Siemens	223
• DP Standard	4AX or 243
Analog Output	
Output signal range	± 10 V
Digital signal representation	13 bits plus sign
Short–circuit proof	yes
Reference potential of the analog output signal	analog ground of the power section
Cable length shielded	max. 32 m (105 ft)
Pulse Input	
Position decoder	incremental
Traverse range	± 32767.999 mm / 0.1 inch / degree

Input voltages for the tracks	
• differential inputs	5 V / RS 422
• asymmetrical inputs	24 V / typ. 7.3 mA
Supply voltage for the sensor (short–circuit proof)	5 V / 350 mA 24 V / 350 mA
Input Frequency and Cable Length	
Symmetrical sensors (5 V)	max. 500 kHz max. 30 m (98 ft) shielded cable length
Asymmetrical sensors (24 V)	max. 100 kHz at 25 m (82 ft) cable length shielded max. 25 kHz at 100 m (330 ft) cable length shielded
Input Signals	2 pulse series 90 degrees out of phase 1 zero pulse

Digital Inputs	
Output voltage range	± 30 V
Galvanic isolation	no
“0” signal	–30 V to +5 V
“1” signal	13 V to 30 V
Permissible zero signal current at “0” signal	1.5 mA
Typical input current at 24 V	7.3 mA

Digital Outputs	
Output voltage range	20 V to 30 V
Galvanic isolation	no
Max. output currents at “1” signal	100 mA
Short–circuit protector	short–circuit proof output
Cable length shielded	max. 100 m (330 ft)
Supply Voltage	
Logic voltage from 24 V ext. supply produced with switched mode power supply	4.7 V to 5.5 V
Current consumption from 24 V supply without outputs and 24 V sensor	typ. 180 mA

Because of its performance capability and the complexity of its description, the IP 266 has its own manual. The order number is 6ES5 998–5SC11.

As an intelligent I/O module, it allows you to use open–loop as well as closed–loop control positioning.

The IP 266 processes positioning operations independently of the execution times of the user programs in the programmable controller. Thus the CPU is not burdened with positioning jobs constantly being processed.

Operation Principle

The IP 266 enables you to control the positioning operation of your drive exactly.

The module delivers a voltage setpoint in the range of ± 10 V via an analog output for the control of a power section for servo motors.

The IP 266 needs exact data about your drive system in order to calculate speed, acceleration, or traverse residual distances. You can store this data in an EEPROM that is permanently installed in the programmable controller. By using a built–in start–up routine, these data can be accessed immediately after you switch on the programmable controller and can be processed directly.

Operating Modes

The IP 266 allows you to select between a linear axis and a circular axis. You can also select the unit of measurement for processing the data: either millimeters [mm], inches [in.], or degrees [deg].

Linear Axis	Circular Axis
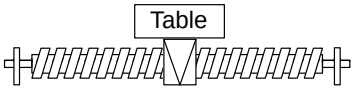	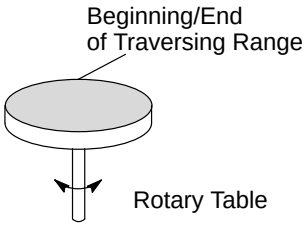
	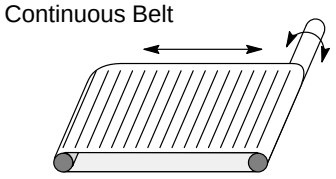
Parameters can be assigned in [mm], [degree], [inch]	Parameters can be assigned in [mm], [degree], [inch]

Besides purely traversing movements, other operating modes allow offset generation of axis coordinates or drift compensation in the system.

In addition, the IP 266 offers operating modes to read current data such as positioning actual value or residual traversing distances.

In order to use the IP 266 in an automatic manufacturing process, you can combine individual traversing applications, positioning corrections, offsets or dwell times in a traversing program. You can call up these traversing programs via two special operating modes and process them automatically or semiautomatically.

The adaptive TEACH–IN mode can create a traversing program simply by taking positions from individual positioning applications and storing them in a traversing program when the mode has run its course.

Positioning

For the positioning operation, the IP 266 calculates a setpoint course from selected end data and velocity data in conjunction with the programmed machine data. The actual value follows the selection. The deviation (following error) which occurs reaches a constant value after the short start–up phase and must reach zero at the end of the positioning operation (see Figure 9-27).

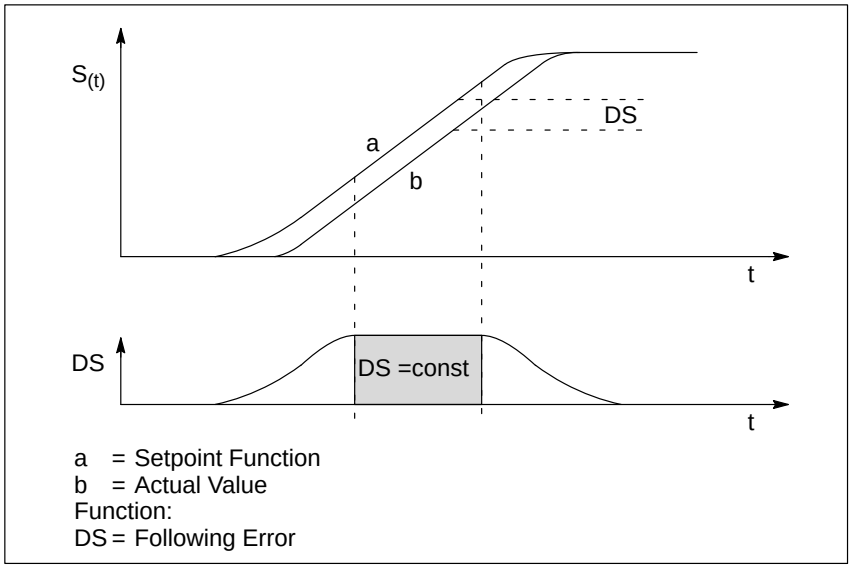

Figure 9-27 Course of a Following Error during a Positioning Operation

Operating Modes

Table 9-7 lists the operating modes of the IP 266 positioning module.

Table 9-7 Designation of the Operating Modes of the IP 266

Description	
JOG 1	TOOL OFFSET ON
JOG 2	TOOL OFFSET OFF
CONTROLLED JOG	ACKNOWLEDGE ERROR
FOLLOW–UP MODE	MODIFY MACHINE DATA
RREFERENCE POINT	DRIFT COMPENSATION ON
INCREMENTAL ABSOLUTE	UNRESTRICTED SPEED
INCREMENTAL RELATIVE	FLAGGING UNRESTRICTED SPEED
AUTOMATIC	DISABLING MONITORS
AUTOMATIC SINGLE BLOCK	ENABLING MONITORS
TEACH–IN ON	DRIFT COMPENSATION OFF
TEACH–IN OFF	RAM ↔ EEPROM
ZERO OFFSET ABSOLUTE	READ ACTUAL POSITION
ZERO OFFSET RELATIVE	READ FOLLOWING ERROR
CLEAR ZERO OFFSET	READ DISTANCE TO GO
	SYNCHRONIZE IP

The COM 266 software package offers user–friendly operation and parameter settings.

Installation

Install the IP 266 on a bus unit like any other I/O module.

- Connect the external switches to the digital inputs of the IP 266 via the terminal block.

  These switches are used to limit the traversing range. They also allow you to intervene at any time in the processing of the module.

- The IP 266 can bypass the PLC CPU cycle, via three digital outputs, and send signals directly to external I/Os.

  The controller must, however, be enabled (function signal enable controller, FUM) and must be connected to the power section of the drive.

- Connect the power section of the servo motor to the 9–pin subminiature D female connector.

- Connect the incremental sensor to the left 15–pin subminiature D female “ENCODER” connector.

- You can connect a programmer with screen to the 15–pin subminiature connector on the right side to operate the IP 266 via the COM software.

9.12 IP 267 Stepper Motor Control Module (6ES5 267–8MA11)

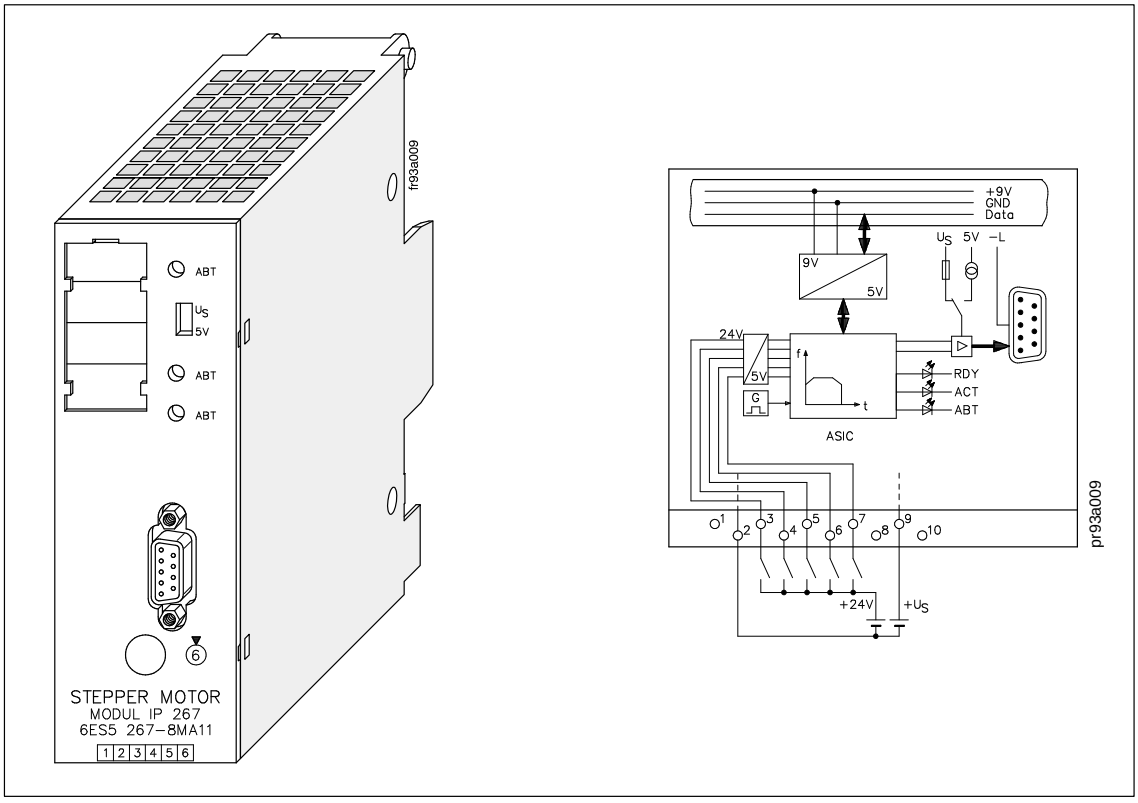

Technical Specifications	
Address ID for ET 200U	
• DP Siemens	093
• DP Standard	2AX or 241
Supply voltage (BUS)	9 V
Current consumption	approx. 150 mA
Special voltage V_s	5 V to 30 V
Digital Inputs	
Rated input voltage	24 V
Galvanic isolation	no
Input voltage	
• “0” signal	–33 V to 5 V
• “1” signal	13 V to 33 V
Input current	typ. 8.5 mA
Supply voltage for two–wire BEROs	22 V to 30 V

9–pin Subminiature D Interface	
Output voltage with 5 V supply	
• “0” signal	max. 0.4 V
• “1” signal	min. 4.5 V
V_s supply (5 V to 30 V)	
• “0” signal	max. 0.4 V
• “1” signal	min. V_s – 0.4 V
Output current	20 mA (short–circuit proof)
Output frequency	max. 204 kHz
Increment number of steps	max. 2^{20} – 1 pulses/order
Permissible cable length	max. 50 m (165 ft.) at 50 kHz (twisted pair cable)

Because of its performance capability and the complexity of its description, the IP 267 has its own manual. The order number is 6ES5 998–5SD21.

The IP 267 controls positioning processes independently of the run time of user programs in the programmable controller. The CPU is not loaded with processing positioning job operations.

Operation Principle of the IP 267

The IP 267 generates pulses for the stepper motor power section. The number of output pulses determines the length of the traversing path and the pulse frequency is a measure of the velocity. Each pulse causes the stepper motor shaft to turn through a certain angle. In the case of high–speed pulse trains, this step movement becomes a constant rotational movement. Stepper motors can reproduce all movement sequences only as long as no steps are lost. Step losses can be caused when load variations occur or when the programmed pulse trains exceed motor–specific values.

To enable the IP 267 to generate these pulse trains, enter the following data:

- Configuration data: These data describe the individual stepper motors and the technical characteristics of the drive system.
- Positioning data: These data describe the individual traverse jobs and indicate the velocities, directions, and lengths of the configured paths.

The IP 267 generates a symmetrical velocity profile according to the configuring and positioning data. The velocity profile includes the acceleration ramp, the constant stepping range and a deceleration ramp.

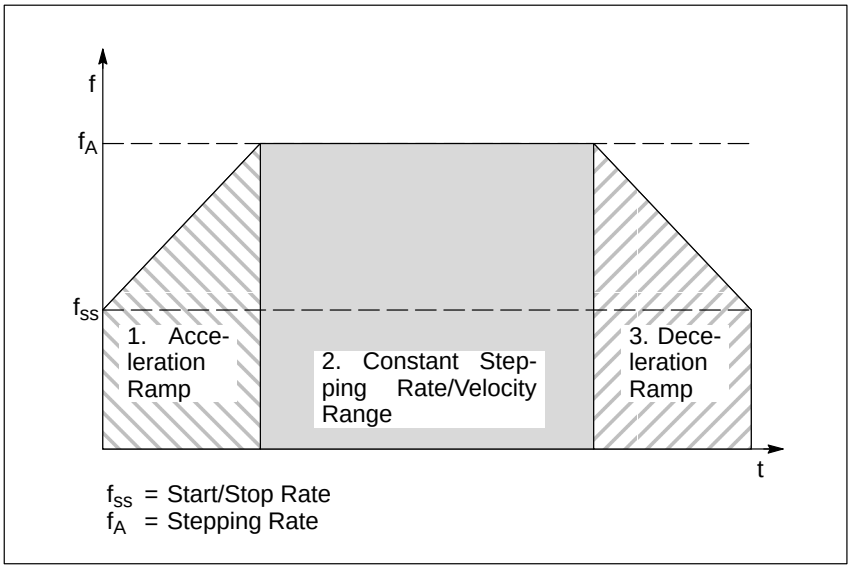

Figure 9-28 Velocity Profile of IP 267

Using a limit switch on the digital inputs, the IP 267 can monitor the limits of a traversing range and stop the traversing movement when the permissible range limit is exceeded.

The activated input EXTERNAL STOP causes a calculated deceleration of the traversing movement.

You can install an emergency limit switch at input IS (pulse inhibit). When this switch responds, the pulse output is interrupted immediately.

For a reference point approach operation, you can connect an additional switch at input REF that lies within the traversing zone. The reference point approach operation is also possible without this switch.

LEDs

The following table explains the status LEDs of the IP 267

LED	Explanation
RDY	The IP 267 is configured
ACT	Pulse outputs during a positioning operation
ABT	Interruption of the positioning operation

The four operating modes are as follows:

- STOP
- START FORWARDS
- START BACKWARDS
- NEUTRAL

Installation

Install the IP 267 on a bus unit like any other I/O module.

- Connect external switches to the DIs of the IP 267 via the terminal block.
- Connect the power section of the stepper motor to the 9–pin subminiature D female connector.

Restriction

Operation of the IP 267 in the ET 200U distributed I/O system is restricted. Please note that the acknowledgement for a job can be evaluated only after a delay time t_d. This time is calulated as follows:

$t_d = 2 \times (t_{I/O–Bus} + t_{DP} + t_{Prog})$

The delay times $t_{I/O–Bus}$, t_{DP} und t_{Prog} are explained in the Appendix of the “ET 200 Distributed I/O System” Manual.

9.13 CP 521 BASIC Communications Module (6ES5 521–8MB11)

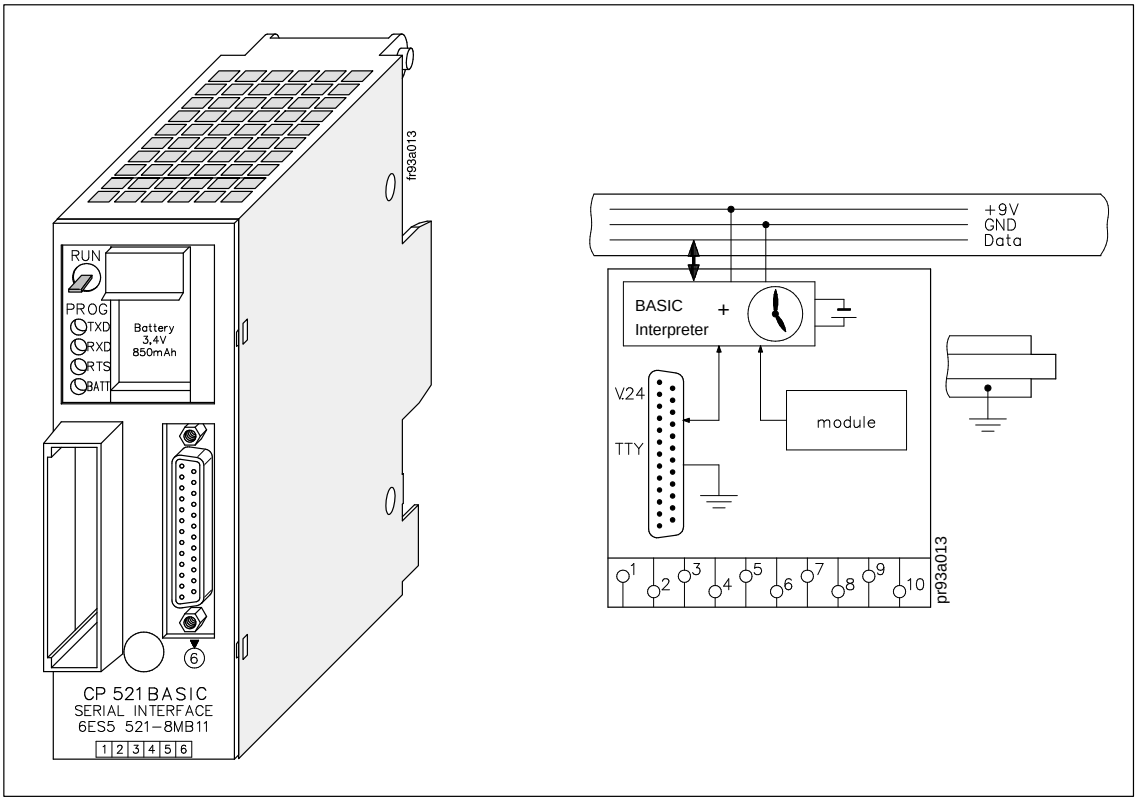

Technical Specification	
Address ID for ET 200U	
• DP Siemens	223
• DP Standard	4AX or 243
Galvanic isolation	TTY signals are isolated
Memory submodule	EPROM / EEPROM / RAM
Serial interface	V.24 / TTY passive (active)
Transmission mode	asynchronous 7–bit mode = 10–bit character frame 11–bit character frame
Transmission mode	110 to 9600 Bd

Permissible cable length	
• V.24	15 m
• TTY (PT 88)	Results from: • (Voltage drop on cable) + • (Receiver–typ. voltage drop 1.5 V) or (transmitter–typ. voltage drop 0.9 V) (max. 1000 m)
LED displays	
• TxD (green)	Transmitting
• RxD (green)	Receiving
• RTS (green)	Ready to send
• BATT (yellow)	Battery failure
Back–up battery Lithium $^1/_2$ AA	3.4 V / 850 mAh
Back–up time	1 year, minimum
Current consumption from +9 V (CPU)	typ. 180 mA
Power loss of module	typ. 1.6 W
Weight	approx. 500 g (1.1 lb)

The CP 521 BASIC communications module is a powerful I/O module with its own central processor.

A separate manual is available for the CP 521 BASIC. It can be ordered under the order number 6ES5 989–0UW21.

The following is an overview of the module's mode of operation.

Function

The CP 521 BASIC is available with a special COM software package which is required for BASIC program generation and archiving (FLOPPY, EPROM).

The implementation of a BASIC interpreter in the CP 521 BASIC enables you to generate and run BASIC programmers which can exchange data with the CPU and an I/O device connected. Programming of the BASIC interpreter is carried out with a programmer via the COM software or at a terminal.

The BASIC programs are stored on a battery–backed RAM on the module or on a memory submodule which can be plugged in.

The programmer or terminal is connected with the CP 521 BASIC via a serial interface. A TTY current interface or a V.24 (RS 232C) voltage interface (parameterizable) are available for a programmer or a terminal. To print out listings or messages, connect a printer to the unidirectional V.24 (RS 232C) interface of the module.

Parameterization (matching) of the I/O interface can be modified via a BASIC command or in the BASIC program.

The module has an integrated real–time clock which can be backed up by a battery if the module is de–energized. The clock data can be used, for example, in the unidirectional data exchange for logging of process states and process disturbances.

Installation

As other I/O modules, the CP 521 BASIC is mounted on the bus unit.

- The module can be plugged in only at slots 0 to 7.
- The module has no connection to the terminal block.
- The printer is connected to the module with a 25–pin sub D connector.

Addressing

The CP 521 BASIC is addressed like a 4–channel analog module.

9.14 CP 521 SI Communications Processor (6ES5 521–8MA21)

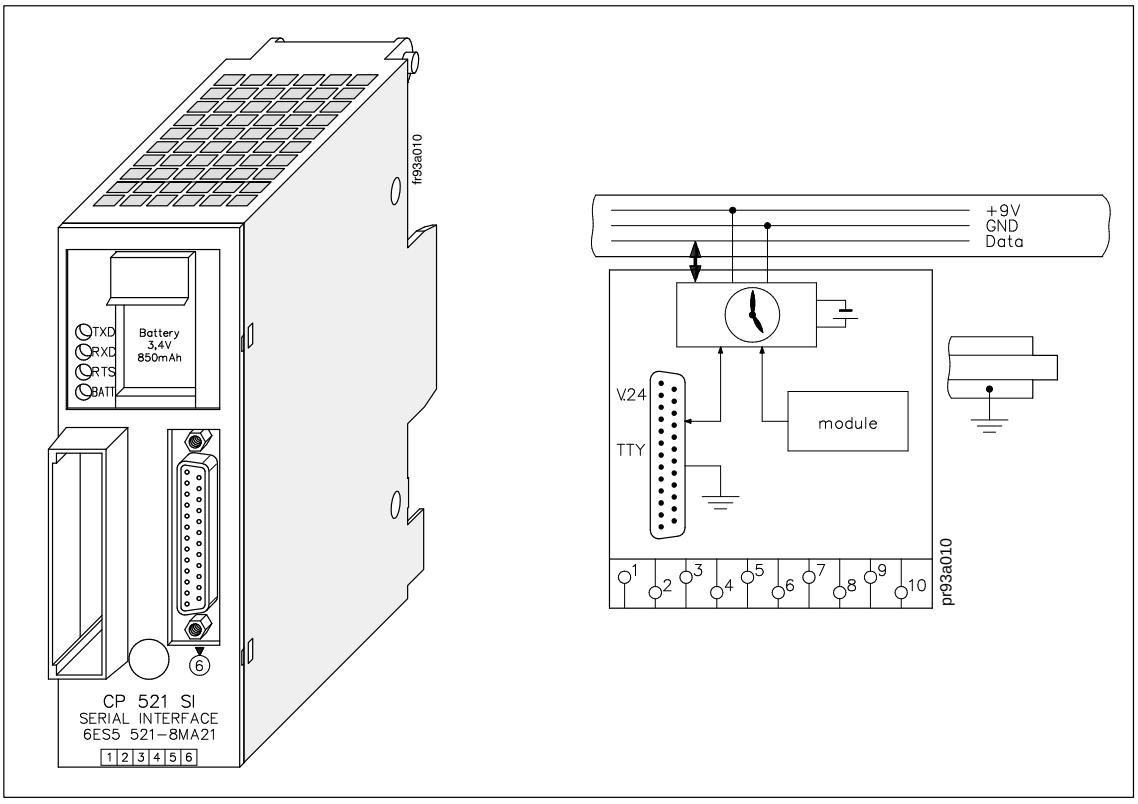

Technical Specifications	
Address ID for ET 200U	
• DP Siemens	223
• DP Standard	4AX or 243
Galvanic isolation	TTY signals are isolated
Memory submodule	EPROM / EEPROM
Serial interface	V.24 / TTY passive (active)
Transmission	asynchronous
	7–bit frame 10–bit character frame/ 11–bit character frame
Transmission rate	110 to 9600 baud

Permissible cable length	
• V.24	15 m
• TTY	Results from: • (Voltage drop on cable) + • (Receiver–typ. voltage drop 1.5 V) or (transmitter–typ. voltage drop 0.9 V) (max. 1000 m)
LED displays	
• TxD (green)	Transmitting
• RxD (green)	Receiving
• RTS (green)	Ready to send
• BATT (yellow)	Battery failure
Back–up battery Lithium $^1/_2$ AA	3.6 V / 850 mAh
Current consumption from +9 V	typ. 140 mA
Power loss of module	typ. 1.2 W
Weight	approx. 500 g (1.1 lb)

The CP 521 SI (Serial Interface) communications module is a powerful I/O module with its own central processor.

A separate manual is available for this module. It can be ordered under the order number 6ES5 998–1UD11.

The following is an overview of the module's mode of operation.

Function

The CP 521 SI can be used for unidirectional and bidirectional data exchange.

Unidirectional Data Exchange

For unidirectional data traffic, the CP 521 SI is provided with a printer driver. If the printer driver is used, the following must be connected to the serial interface of the CP 521 SI:

- A printer with TTY interface (active) or
- A printer with V.24 (RS 232C) interface.

This enables you to log process states and process disturbances. The output of messages on the printer does not extend the response time of the programmable controller.

The following messages and texts can be output:

- Message texts, which you have configured on a memory submodule in data blocks DB 2 to 63.
- Time of day and date, which are provided by the module's own clock
- Values for variables which are transmitted to the CP 521 SI via the I/O bus.

The message texts are stored on an EPROM or EEPROM memory submodule (up to 8/16 Kbytes).

Bidirectional Data Exchange

The following drivers are implemented for the bidirectional data exchange:

- ASCII driver, transparent
- ASCII driver, interpreting
- "3964(R)" driver
- SINEC L1 driver, master (point–to–point link)
- SINEC L1 driver, slave
- Terminal driver

The use of these drivers enables the transmission of data frames between the CPU and an I/O device connected to the CP 521 SI.

The maximum data flow rate is 6 bytes of user data per 2 program cycles; i.e. at a program cycle time of, for example, 50 ms a maximum of 60 bytes per second can be transmitted.

The following terminals and communications devices can be used as I/O devices:

- Keyboard
- Terminal
- Another CP 521 SI
- CP 523
- CP 524/CP 525–2 (in connection with special driver 6ES5 897–2AB11)
- CPU 944 (with ASCII driver, 3964(R) driver)
- Other I/O devices with serial interface, e.g. bar code readers

Which of the I/O devices and transmission modes are used depends on the intended application of data transmission. In the bidirectional data exchange mode of the module you are, for example, able to network programmable controllers (point–to–point link).

I/O device and CP 521 SI are connected with each other via a serial interface. Either a passive TTY interface or a V.24 voltage interface are available (programmable).

Parameterizing (matching) of the I/O interface and configuring of the message texts are supported by the DB editor of the programmers. The parameters of the I/O interface are stored either on the memory submodule in DB1 or are directly transmitted in the user program. The CP 521 SI can be programmed and operated without the COM software.

Integrated Real–Time Clock

The CP 521 SI has its own real–time clock which is battery–backed when the module is in the de–energized state. Independent of the type of function selected for the CP 521 SI, the clock data can be read from the CPU and can be used in the user program for date and time–dependent tasks.

Installation

As other I/O modules, the CP 521 BASIC is mounted on the bus unit.

- The module can be plugged in only at slots 0 to 7.
- The module has no connection to the terminal block.
- The printer is connected to the module with a 25–pin sub D connector.

Addressing

The CP 521 BASIC is addressed like a 4–channel analog module.

Safety–Related Guidelines

A

A.1 Active and Passive Faults in Automation Equipment A-2
Procedures for Maintenance and Repair A-2

A.2 Suggestions for Configuring and Installing a Programmable Controller . . A-3

Safety–Related Guidelines

A

The following guidelines must be observed to prevent personal injuries and damage to the product described or the devices connected.

A.1 Active and Passive Faults in Automation Equipment

Depending on the particular task for which the electronic automation equipment is used, both **active** as well as **passive** faults can result in a **dangerous** situation. For example, in drive control, an active fault is generally dangerous because it can result in an unauthorized start–up of the drive. On the other hand, a passive fault in a signalling function can result in a dangerous operating state not being reported to the operator.

The differentiation of the possible faults and their classification into dangerous and non–dangerous faults, depending on the particular task, is important for all safety considerations in respect to the product supplied.



Warning

In all cases where a fault in automation equipment can result in severe personal injury or substantial property damage, i.e., where a dangerous fault can occur, additional external measures must be taken or equipment provided to ensure or force safe operating conditions even in the event of a fault (e.g., by means of independent limit monitors, mechanical interlocks, etc.).

Procedures for Maintenance and Repair

If you are carrying out measurement or testing work on an **ET200U distributed I/O station**, you must adhere to the rules and regulations contained in the “VBG 4.0 Accident Prevention Regulations” of the German employers liability assurance association (“Berufsgenossenschaften”). Pay particular attention to paragraph 8, “Permissible exceptions when working on live parts.”

Repairs may only be carried out by **Siemens service personnel** or **repair shops Siemens has authorized to carry out such repairs.**

A.2 Suggestions for Configuring and Installing a Programmable Controller

A programmable controller is often used as a component in a larger system. The suggestions contained in the following warning are intended to help you install your programmable controller safely.



Warning

- Adhere to any safety and accident–prevention regulations applicable to your situation and system.
- If your system has a permanent power connection (stationary equipment) that is not equipped with an isolating switch and/or fuses that disconnect all poles, install either a suitable isolating switch or fuses in the building wiring system. Connect your system to a ground conductor.
- Before start–up, if you have units that operate using the main power supply, make sure that the voltage range setting on the equipment matches the local main power voltage.
- When using a 24 V supply, make sure to provide proper electric isolation between the main supply and the 24 V supply. Use only power supplies manufactured according to IEC 364–4–41 or HD 384.04.41 (VDE 0100, part 410).
- Fluctuations or deviations of the supply voltage from the rated value may not exceed the tolerance limit specified in the technical specifications. If they do, functional failures or dangerous conditions can occur in the electronic modules or equipment.
- Take suitable measures to make sure that programs that are interrupted by a voltage dip or power failure resume proper operation when the power is restored. Make sure that dangerous operating conditions do not occur even momentarily. If necessary, force an EMERGENCY OFF.
- EMERGENCY OFF devices must be in accordance with EN 60204/ IEC 204 (VDE 0113) and be effective in all operating modes of the equipment. Make certain to prevent any uncontrolled or undefined restart when the EMERGENCY OFF devices are released.
- Install power supply and signal cables so that inductive and capacitive interference cannot affect the automation functions.
- Install your automation system and its operative components so as to prevent unintentional operation.
- Automation equipment can assume an undefined state in the case of a wire break in the signal lines. To prevent this, take the proper hardware and software safety measures when linking the inputs and outputs of the automation equipment.

Glossary

B

A

Access mode
There are two access modes: read and write access

Active nodes
Can transmit data to other nodes or request data from other nodes when they have a permission to send (= master station).

Address identifier
Combination of letters/digits identifying an ET 200U I/O module in COM ET 200.

Arc suppression element
Components for reducing induced voltages. Induced voltages occur when inductive circuits are de–energized.

Array
A set of elements of the same type.

In the ET 200U(DP Standard/FMS), for example, multi–channel analog modules are assigned the object code “array”.

B

Baud rate
Data transmission speed: specifies the number of bits transmitted per second (baud rate = bit rate)

Bus
Common transmission path for all nodes connected; with defined termination points.

Bus connector
Physical interface between node and bus cable.

Bus node
Device that can send, receive or amplify data via the bus, e.g. master station, slave station, repeater, active star hub, etc.

Bus segment
→ Segment

C

Chassis
Chassis defines the entire range of interconnected dead inactive parts of a device that are not subject to any dangerous touch voltages, even in the case of a fault.

Communication link
A communications link forms a logical interface between two bus nodes. Their relationships are defined in the → list of communications links.

Communication reference
A communications link is established between two stations which need to exchange data. Each station is therefore assigned at least one communications link. These relationships are identified by numbers (so–called communications references). A communications reference is equivalent to an “internal address” of the station in layer 7.

Control command

A DP master can send commands to one slave station, a group of slave stations or to all slave stations in order to synchronize the slave stations.

The → FREEZE and → SYNC control commands are used to synchronize slave stations event–driven.

The ET 200U(DP Standard) slave station responds to the FREEZE and SYNC control commands.

CP 5410 S5–DOS/ST

Programmer interface module for connection to SINEC L2 and SINEC L2–DP.

D

Diagnostics

Detection, location, classification, display, additional evaluation of errors, faults and messages.

Diagnostics includes monitoring functions that are automatically executed during normal operation.

Application: Increasing the availability of a sytem/plant by cutting start–up and idle times.

DIN 19245, Part 1

German process and fieldbus standard.

Part 1 specifies the bus access and transmission protocol and defines the required transmission technique.

DIN 19245, Part 3

→ PROFIBUS–DP

Distributed I/O

Comprises the input/output modules connected in a distributed configuration, i.e. at a distance from the CPU. The ET 200 is the distributed I/O of the SIMATIC range. It includes the following distributed I/O systems:

- ET 200B,
- ET 200C,
- ET 200U or
- third–party systems.

Distributed I/O station

→ Distributed I/O

DP Standard

DP Standard is the bus protocol of the ET 200 distributed I/O system, based on the DIN 19245, Part 3 draft standard.

DP Siemens

DP Siemens is the bus protocol developed by Siemens. In cooperation with the PROFIBUS User Organization, the bus protocol has been extended to an open multi–vendor system. This extended bus protocol has been filed with the German Electrotechnical Commission (DKE) and accepted as national draft standard DIN 19245, Part 3 (→ DP Standard).

E

Earth

The conductive soil where the potential at all points can be assumed equal to zero.

Earthing

Connecting an electrically conductive part to the earthing electrode via the earthing system.

Earthing electrode

One or more conductive part(s) that make good contact with the earth.

ET 200

Bus for connecting the distributed I/O to the S5–115U ... S5–155U programmable controllers or any other adequate master. The ET 200 is characterized by fast response times since only small data volumes (bytes) are transferred.

The ET 200 is based on the PROFIBUS standard (DIN 19245/part 1) and the PROFIBUS–DP draft standard (DIN E 19245/Part 3).

The ET 200 operates according to the master–slave principle. The IM 308–B master interface module or any host incorporating the CP 5480–DP can be master.

The ET 200B, ET 200C or ET 200U distributed I/O systems can be configured as slaves. Distributed I/O systems including an SPM module can also be connected.

Event

An important message which the ET 200U(DP Standard/FMS), for example, sends to the FMS master.

F

Field devices

All devices outside the switchgear room installed in the field, i.e. where the sensors and actuators are.

Floating

In floating I/O modules, the reference potentials of the control and load circuits are electrically isolated, e.g. via optical couplers, relay contacts or line transformers. Input and output circuits can be grouped. Do not confuse with “isolated”.

FMS

Fieldbus Message Specification, → DIN 19245, Part 2.

FMS service

FMS services are used by the FMS master to process the “ET 200U(FMS)” object.

There are FMS services which require acknowledgement and those which need not be acknowledged. For an FMS service requiring acknowledgement (e.g. MSAZ), the ET 200U(DP Standard/FMS) acknowledges the receipt of an FMS service to the FMS master. If an FMS service need not be acknowledged (e.g. multicast and broadcast), the ET 200U(DP Standard/FMS) sends no acknowledgement to the FMS master.

FMS master

The term FMS master defines a master acting in accordance with the PROFIBUS standard, DIN 19245, Parts 1 and 2.

FMS slave

The term FMS slave defines a slave acting in accordance with the PROFIBUS standard, DIN 19245, Parts 1 and 2.

FREEZE

is a → control command.

Using this control command, the DP master can “freeze” the input statuses to their actual value. The input data are updated again only when the DP master once more sends the FREEZE control command.

I

Indication

An indication is used to mark a request (.ind).

Inherently short–circuit proof

Equipment is inherently short–circuit proof if a short–circuit is not likely to occur under certain operating conditions if suitable measures are taken.

Insulation monitoring

Circuit for monitoring the insulation resistance of a plant.

I/O bus

Bus which links the I/O modules to the CPU or IM 308–B interface module.

I/O bus speed — The speed of the I/O bus is selectable. Certain modules, i.e. the IP 265 have to be operated at a lower I/O bus speed (slow mode). The speed can be set on the IM 318–B interface module.

IP 20 — Degree of protection to DIN 40050: Protection against contact with live or moving parts by fingers or against ingress of solid foreign bodies of diameters greater than 12 mm.

Isolated — In isolated I/O modules, the reference potentials of the control and load circuits are electrically isolated. The input and output circuits are not “grouped”, i.e. the input and output cicuits are not connected to a common potential (so–called group of one). Do not confuse with “floating”.

K

KBL — → List of communication links

KR — → Communication reference

L

Length — Length of a data type

List of communication links — The list of communication links (KBL) contains the configuring data of the bus nodes concerned.

The list of communication links for the ET 200U(DP Standard/FMS) describes seven relationships.

Load power supply — For supplying power to the I/O modules

Loop resistance — Overall resistance of the outgoing and return conductors.

M

Master interface module — Module for distributed configurations. The IM 308–B master interface module is used for “connecting” the distributed I/O to the programmable controller.

Master–slave access method — Bus access method providing for only one →active node while all other nodes are → passive.

N

NCM — SINEC NCM (Network and Communication Management) is a software tool for configuring the CP 5431 FMS as an FMS master.

Non–floating — In non–floating I/O modules, the reference potentials of the control and load circuits are electrically interconnected.

O

Object — Each FMS bus node is addressed via objects. The data area and data structure are defined in an object.

Object code — The object code describes the structure of an → object.

In the ET 200U(DP Standard/FMS), objects of the type → Simple–Variable, → Array and → Event are used.

Object list

Data communications on the bus cannot commence unless the FMS master is informed of the stations involved and their significance and structure. This information is contained in the object list (OV).

The object list of the ET 200U(DP Standard/FMS) contains the following:

- Input and output values of the ET 200U(DP Standard/FMS)
- Diagnostics data
- Parameter data.

Octet

Octet is a general expression for one byte.

OV

→ Object list

P

Page addressing

Multiplying of address range

Passive nodes

They may exchange data with an active node only after being requested to do so by the active node (= slave station).

PDU

→ Protocol Data Unit

PII

→ Process image

PIQ

→ Process image

Process image

An “image” of the input states (= PII) or output states (= PIQ) at a specified point of time. The process image can be accessed by the PLC program.

PROFIBUS

PROcess FIeld BUS, German process and field bus standard defined in the PROFIBUS standard (DIN 19245).

It specifies functional, electrical and mechanical characteristics for a bit–serial field bus system.

PROFIBUS–DP

PROFIBUS–DP draft standard (DIN 19245, Part 3) on which the ET 200 distributed I/O system is based.

The major task of PROFIBUS–DP is the fast cyclic data exchange between the central master stations and the I/O devices.

Protective conductor

A conductor required for protective measures against shock currents. It is symbolized by PE.

Protocol Data Unit

A protocol data unit (PDU) contains the information to be exchanged between two bus nodes.

In the PROFIBUS specification, this means a message exchanged, for example, between the ET 200U(DP Standard/FMS) and the FMS master.

The maximum length of a protocol data unit is specified in the → list of communications links.

R

Reference earth

→ Earth

Reference potential

Potential to which the voltages of the circuits involved are referred, or with reference to which they are measured.

Repeater

Device for amplifying bus signals and interfacing → segments for covering long distances.

Repeater adapter Device for a mixed configuration of RS 485 and optical–fiber conductor transmission hardware.

Request A request of the FMS master (.req)

Response time Period between an edge at the input and the programmed output signal change.

S

SAP Service Access Point

Screen impedance AC resistance of the cable screen. The screen impedance is a characteristic of the cable and is generally specified by the manufacturer.

Segment The bus line between two terminating resistors constitutes a segment. A segment includes 0 to 32 → nodes. Segments can be linked via → repeaters.

Sensors/actuators profile The PROFIBUS standard, DIN 19245, Parts 1 and 2 covers a wide range of applications. In a specialized environment, however, such as the field level, only a limited scope of functions is required. For this reason, the sensors/actuators profile has been created. It defines the lower field level and the measuring technology used.

The ET 200U(DP Standard/FMS) is based on the sensors/actuators profile.

Service Access Point The services available in a layer can be accessed by the (next) higher layer via a service access point. It represents a logical interface for the exchange of → protocol data units.

Short circuit Caused by a fault; it conductively connects conductors that are energized in normal operation if no resistance is inserted in the faulty circuit.

Short circuit proof Equipment is short–circuit proof if it withstands the thermal and dynamic effects of the maximum permissible short–circuit current at a location.

Simple–Variable Objects of the “Simple–Variable” type cannot be divided up further.

In the ET 200U(DP Standard/FMS), e.g. digital modules and single–channel analog modules have a “Simple–Variable” object code.

SINEC L2 LAN that interfaces PROFIBUS–compatible programmable controllers and field devices both at the cell and field levels.

SINEC L2–DP SINEC L2 LAN with DP protocol. DP denotes the distributed I/O.

Slave initiation When the slave has received a send request from the FMS master, it can send an FMS service to the FMS master without any further initiation.

The ET 200U(DP Standard/FMS), for example, informs the FMS master of the change of a diagnostics message without any external initiation.

SPM module An SPM module can be used for interfacing the distributed I/O with the SINEC L2–DP bus. The module incorporates an SPM (SIEMENS PROFIBUS Multiplexer) which generates all the bus messages.

Static object list The static object list is an integral part of the → object list. The static object list describes the individual objects.

Station number

Each ET 200 node must be assigned a station number.

The programmer or ET 200 handheld unit are addressed by means of station number “0”;

A master has either station number “1” or “2”;

The station numbers for the slave stations are in the range from 3 to 124. Exception: The ET 200B is assigned a station number in the range from 3 to 99.

Subindex

Access index for an element of an array.

SYNC

is a → control command.

Using this control command, the DP master can “freeze” the outputs to their actual value. The output data of the following frames are stored, but the output statuses are not changed. The outputs are updated again only when the DP master once more sends the SYNC control command.

T

Terminating resistor

Resistance for matching to the impedance of a bus cable; terminating resistors are generally required for terminating cables or segments.

U

Ungrounded configuration

Configuration without any electrical connection to ground. In most cases, the fault currents are discharged via an RC element.

Index

Numbers

262–8MA12. *See* Closed–loop control module IP 262
262–8MB12. *See* Closed–loop control module IP 262
263–8MA11. *See* IP 263 Positioning module
264–8MA11. *See* Electronic cam controller module IP 264
265–8MA01. *See* IP 265 high speed sub control
266–8MA11. *See* IP 266 positioning module
267–8MA11. *See* IP 267 Stepper motor control module
315–8MA11. *See* Interface module IM 315
316–8MA12. *See* Interface modules IM 316
330–8MA11. *See* Diagnostic module
380–4AB01. *See* Stromversorgungsbaugruppe PS 2410
380–8MA11. *See* Timer module 2x0.3 to 300s
385–8MA11. *See* Counter module 2 x 0 to 500 Hz
385–8MB11. *See* Counter module 25/500 kHz
461–8MA11. *See* Comparator module
464–8MA11, analog input module, 7-14
464–8MA21, analog input module, 7-12, 7-14
464–8MB11, analog input module, 7-5
464–8MC11, analog input module, 7-5
464–8MD11, analog input module, 7-6
464–8MF21, analog input module, 7-15
466–8MC11, analog input module, 7-5, 7-23
521–8MA21. *See* CP 521 SI communications processor
521–8MB11. *See* CP 521 BASIC communications module
700–8MA11. *See* Bus unit (SIGUT)
700–8MA21. *See* Bus unit (Crimp–snap–in)
788–8MA11. *See* Simulator module
931–8MD11. *See* Power supply module PS 931
935–8ME11. *See* Power supply module PS 935

A

Abort, 6-11
Access mode, B-1
ACI, 6-34
Acknowledge–Event–Notification, 6-12
Active node, B-1
Address, 1st available, 4-6, 4-7, 5-6, 5-7
Address assignment using COM ET 200
  ET 200U (DP Siemens), 4-3–4-16
  ET 200U (DP Standard), 5-3–5-19
Address identifier, B-1
Address IDs
  ET 200U(DP Siemens), 4-9–4-13
  ET 200U(DP Standard), 5-9–5-13
    input of unknown address IDs, 5-14–5-15
Address space, 1-3
Addressing, 9-42
  with multi–tier configuration, 3-11
Addressing range, ET 200U, 3-1
Addressing with CPUs 941, 942, 943 and 944
  ET 200U(DP Siemens), 4-7–4-8
  ET 200U(DP Standard), 5-7–5-8
Alter–Event–Condition–Monitoring, 6-12
Analog input module
  464–8MA11, 7-14
  464–8MA21, 7-12, 7-14
  464–8MB11, 7-5
  464–8MC11, 7-5
  464–8MD11, 7-6
  464–8MF21, 7-15
  466–8MC11, 7-5, 7-23
  start–up, 7-11
Analog input modules, 7-2, 8-41
  2 x PT 100 / +/–500 mV, 8-55
  2 x PT 100 / +/–500 V, 8-53
  4 x +/– 20 mA, 8-51
  4 x +0 ... 10 V, 8-57
  4x+/– 1 V, 8-45
  4x+/– 20 mA, 8-49
  4x+/– 50 mV, 8-41, 8-43
  4x+/–10 V, 8-47
Analog output modules, 7-25, 8-59
  2 x +/–10 V, 8-59
  2 x +/–20 mA, 8-61
  2 x 1 to 5 V, 8-65
  2 x 4 to 20 V, 8-63
Analog value representation, 7-16
Arc suppression element, B-1
Area
  ET 200U(DP Siemens), 4-6
  ET 200U(DP Standard), 5-6
Array, B-1
ATTR, 6-33

B

Baud rate, B-1
Bus, B-1
Bus connector, B-1
BUS FAULT LED, ET 200U(DP Standard), 5-29
“BUS–FAULT” LED, ET 200U(DP Standard/ FMS), 6-35
Bus modules
  installing, 3-5
  number of modules which can be connected, 3-1
Bus node, B-1
Bus parameters for operation with the FMS protocol, 6-5
Bus protocol, 1-4
Bus segment, B-1
Bus unit, 8-12
  bus unit (Crimp–snap–in), 8-13
  technical specifications, 8-12, 8-13
Bus units
  bus unit (SIGUT), 8-12
  remove, 3-8

C

Cabinet installation, 3-9
CCI, 6-34
Chassis, B-1
Closed–loop control module IP 262, 9-44
  addressing, 9-47
  analog inputs, 9-44
  analog outputs of the constant controller, 9-45
  binary inputs, 9-45
  binary output for the open–loop controller, 9-45
  DDC operation, 9-47
  function, 9-46
  installation, 9-46
  operating modes, 9-47
  SPC operation, 9-47
  technical specifications, 9-44
Combi–slave
  mode of IM 318–C, 6-4
  requirements for operating an IM 318–C, 6-5
  with an IM 318–C, 6-3
Communication link, 6-30, B-1
Communication reference, 6-33, B-1
Communications conforming to PROFIBUS standard, Part 2, 6-10–6-34
Comparator module, **9-2**
  addressing, 9-3
  function, 9-3
  installation, 9-3
  technical specifications, 9-2
  typical application, 9-4
  wiring, 9-3
Compensating box, 7-3
Configuration
  floating, 3-30
  grounded, 3-26
  nonfloating, 3-28
  one tier, 3-3–3-11
  ungrounded, 3-27
  with power supply, 3-25
Configuring, 4-9, 5-9
  ET 200U(DP Siemens), 4-9
  ET 200U(DP Standard), 5-9
CONFIGURING screen
  ET 200U(DP Siemens), 4-4
  ET 200U(DP Standard), 5-4
Connecting cable 712–8, 3-9
Connection
  current sensor, 7-3, 7-6
  resistance termometer, 7-10
  thermocouple, 7-5
  transducer, 7-8
  voltage sensor, 7-3, 7-5
Control command, B-2
CONTROL function
  ET 200U(DP Siemens), 4-23
  ET 200U(DP Standard), 5-26
CONTROL with load circuit
  ET 200U(DP Siemens), 4-23
  ET 200U(DP Standard), 5-27

Counter module 25/500 kHz, 9-18
connection of a 24 V DC position sensor, 9-23
connection of a 5 V DC position sensor to RS 422A, 9-23
connection of a counting pulse sensor for 24 V DC, 9-22
connection of counting pulse sensors for a 5 V differential signal to RS 422A, 9-22
connection of pulse and position sensors, 9-21
counter mode, 9-28
data transmission, 9-26
disabling the counter, 9-29
enabling the counter, 9-28
function, 9-20
functional description of the position decoder, 9-31
initial setting, 9-28, 9-31
installing and removing the module, 9-21
installing/removing sensors, 9-21
loading setpoints, 9-28, 9-32
performance during overflow, 9-30
position resolution, 9-31
requirements of the sensors, 9-24
synchronization of actual value detection (reference point approach), 9-33
technical specifications, 9-18
terminal block, 9-25
Counter module 2x0 to 500 Hz, 9-13
addressing, 9-15
function, 9-15
installation, 9-15
technical specifications, 9-14
typical application, 9-17
wiring, 9-15
CP 521 BASIC communications module, 9-66
function, 9-67
technical specifications, 9-66
CP 521 SI communications processor, 9-68
function, 9-69
installation, 9-70
CP 5410–S5–DOS/ST, B-2
Crimp–snap–in connections, 3-13
Crimp–snap–in contacts, dismantling, 3-14
Crimp–snap–in terminals, 3-12
Current consumption, 3-1
Current sensor, connection, 7-3, 7-6

D

Data throughput, 1-3
Degree of protection, 1-3
Degree to which a slave station can be expanded, 3-1
Diagnose problems using COM ET 200
ET 200U(DP Siemens), 4-27–4-28
ET 200U(DP Standard), 5-30–5-31
Diagnosing faults
ET 200U(DP Siemens), 4-25–4-36
ET 200U(DP Standard), 5-28–5-40
Diagnosing faults with STEP 5
ET 200U(DP Siemens), 4-29–4-36
ET 200U(DP Standard), 5-32–5-40
Diagnostic module, 9-10
addressing, 9-12
CLEAR, 9-11
DATA/DATA–N, 9-11
function, 9-11
IDENT, 9-11
installation, 9-12
LATCH/CLOCK, 9-11
technical specifications, 9-10
wiring, 9-12
Diagnostics, B-2
Diagnostics data, “diagnostics data” object, 6-19–6-24
Diagnostics event, “Diagnostics event” object, 6-29–6-32
Diagnostics messages of ET 200U(DP Standard/FMS), Station status, 6-20
Diagnostics messages of the ET 200U (DP Standard/FMS)
“module diagnostics” header, 6-23
“station diagnostics” header, 6-22
DP master address, 6-21
manufacturer identification, 6-21
module diagnostics, 6-24
module diagnostics, 6-23
station diagnostics, 6-22
DIAGNOSTICS:OVERVIEW screen, ET 200U(DP Siemens), 4-27, 5-30
Differences, between ET 200U(DP Standard), ET 200U(FMS), ET 200U in a mixed configuration and combi–slave, 6-6–6-8
Differences between the Various Modes of the IM 318–C, 6-6–6-8

Digital input module, 8-16
4x24 V DC, 8-16
8x115 V AC, 8-23
8x230 V AC, 8-24
8x24 V DC, 8-17, 8-22
8x5 to 24 V DC, 8-25
Digital input modules
4x115 V AC, 8-20
4x230 V AC, 8-21
4x24 V to 60 V DC, 8-19
Digital input/output modules, 8-39
crimp snap–in connector, 40–pin, 8-39
crimp snap–in connector; 40–pin, 8-18
screw plug connector, 40–pin, 8-39
screw plug connector; 40–pin, 8-18
Digital modules, connecting, 3-16
Digital output module
4x 24 V DC / 2 A, 8-28
4x115 to 230 V AC / 1 A, 8-31
4x24 to 60 V DC / 0.5 A, 8-30
4x24 V DC / 0.5 A, 8-26
8x115 to 230 V AC / 0.5 A, 8-33
8x24 V DC / 1 A, 8-32
8x5 to 24 V DC / 0.1 A, 8-34
digital output module 4x24 V DC / 0.5 A, 8-29
relay output module 4x30 V DC / 230 V AC, 8-37
relay output module 8x30 V DC / 230 V AC, 8-35
DIN 19245 E, Part 3, 1-2
DIN 19245, Part 1, 1-2, **1-4**, B-2
DIN 19245, Part 2, 1-5
DIN 19245, Part 3, **1-4**
DIN E 19245, Part 3, B-2
Dismantling, 3-2, 3-7
IM 318–B, 3-7
power supply, 3-7
Distributed I/O, B-2
Distributed I/O station, B-2
DP inputs, “DP inputs” object, 6-27
DP master address, ET 200U(DP Standard/ FMS), 6-21
DP outputs, “DP outputs” object, 6-28
DP Siemens, 1-3–1-8, 4-2, B-2
DP slave parameterization frame, ET 200U (DP Standard), 5-15–5-16
DP Standard, 1-3–1-8, 5-2, B-2

E

Earth, B-2
Earthing, B-2
Earthing electrode, B-2
Electrical configuration, 3-23
Electronic cam controller module IP 264, technical specifications, 9-52
ET 200, 1-2, B-3
ET 200 in a mixed configuration, Requirements for operating an IM 318–C, 6-5
ET 200(DP Standard), with an IM 318–C, 6-2
ET 200(DP Standard/FMS), structure of diagnostics data, 6-19
ET 200U, 1-3
addressing range, 3-1
ET 200U (DP Siemens), address assignment using COM ET 200, 4-3–4-16
ET 200U (DP Standard), address assignment using COM ET 200, 5-3–5-19

ET 200U (DP Standard/FMS), **6-1–6-42**
ET 200U in a mixed configuration, Mode of the IM 318–C, 6-4
ET 200U interface module, 1-3
ET 200U(DP Siemens), 1-4–1-9, 4-1–4-36
”DIAGNOSTICS:OVERVIEW” screen, 4-27, 5-30
address IDs, 4-9–4-13
addressing with CPUs 941, 942, 943, 944, 4-7–4-8
area, 4-6
configuring, 4-9
CONFIGURING screen, 4-4
CONTROL function, 4-23
CONTROL with load circuit, 4-23
diagnose problems using COM ET 200, 4-27–4-28
diagnosing faults, 4-25–4-36
diagnosing faults with STEP 5, 4-29–4-36
I/O bus speed, 4-18–4-19
”INDIVIDUAL DIAGNOSTICS” screen, 4-28
manufacturer identification, 4-33
modifying an already configured slave station, 4-16
modifying the configuration at a later point, 4-15–4-17
module address, 4-14
module diagnostics, 4-35, 5-38
next available address, 4-7
requirements for operation, 4-2
setting the station number, 4-18–4-19
slow mode, 4-18
start–up, 4-17–4-24
station diagnostics, 4-34
station number area, 4-5
station status, 4-31
station type, 4-6
STATUS function, 4-23
structure of diagnostics, 4-30
SYSTEM START–UP/TEST: STATUS/ CONTROL screen, 4-22
SYSTEM START–UP/TEST:MODULE SELECTION screen, 4-21
test, 4-17–4-24
using LEDs to diagnose problems, 4-26
ET 200U(DP Standard), 1-4–1-9, 5-1–5-40
”SYSTEM START–UP/TEST:MODULE SELECTION” screen, 5-24
address IDs, 5-9–5-13
input of unknown address IDs, 5-14–5-15
addressing with CPUs 941, 942, 943, 944, 5-7–5-8
area, 5-6
BUS FAULT LED, 5-29
configuring, 5-9
CONFIGURING screen, 5-4
CONTROL function, 5-26
CONTROL with load circuit, 5-27
diagnose problems using COM ET 200, 5-30–5-31
diagnosing faults, 5-28–5-40
diagnosing faults with STEP 5, 5-32–5-40
diagnostics messages, 5-25
DP slave parameterization frame, 5-15
I/O bus speed, 5-21–5-22
IM FAULT LED, 5-29
INDIVIDUAL DIAGNOSTICS screen, 5-31
manufacturer identification, 5-36
mode of the IM 318–C, 6-4
modifying an already configured slave station, 5-19
modifying the configuration at a later point, 5-18–5-20
module address, 5-14
next available address, 5-7
parameterization frame, 5-15–5-16
requirements for operating an IM 318–C, 6-5
requirements for operation, 5-2
RUN LED, 5-29
setting the station number, 5-21–5-22
start–up, 5-20–5-27
station diagnostics, 5-37
station number area, 5-5
station status, 5-34
station type, 5-6
STATUS function, 5-26
structure of diagnostics, 5-33
SYSTEM START–UP/TEST: STATUS/ CONTROL screen, 5-25
test, 5-20–5-27
using LEDs to diagnose problems, 5-29

ET 200U(DP Standard/FMS)
“BUS–FAULT” LED, 6-35
“IM–FAULT” LED, 6-35
“RUN” LED, 6-35
ET 200U(FMS), 6-1, 6-2
coding the I/O Modules, 6-15–6-19
mode of the IM 318–C, 6-4
requirements for operating an IM 318–C, 6-5
Event, B-3
Event–Notification, 6-12
Example, of programming a link between an ET 200U(FMS) and a CP 5431 FMS, 6-36–6-42
Expanding
several tiers, 3-9
slave station, already configured, 4-15, 5-18
Expanding at a later point, slave station, 4-15, 5-18
Extraction tool, 3-14

F

Features supported, 6-34
Field device, B-3
Floating, B-3
FMS, **1-5**, 6-1–6-42, B-3
FMS inputs, “FMS inputs” object, 6-27
FMS master, B-3
FMS outputs, “FMS outputs” object, 6-28
FMS service, 6-11–6-12, B-3
Abort, 6-11
Acknowledge–Event–Notification, 6-12
Alter–Event–Condition–Monitoring, 6-12
Event–Notification, 6-12
Get–OV, 6-12
Identify, 6-12
Initiate, 6-11
Read, 6-12
Reject, 6-11
Status, 6-12
Write, 6-12
FMS slave, B-3
FREEZE, B-3
Function, CONTROL, 4-23, 5-26

G

General electrical configuration, 3-23
Get–OV, 6-12

H

Hardware, replacing, 3-2
Heat dissipation, 3-9

I

I/O bus, B-3
I/O bus speed, B-4
I/O module
installing, 3-6
plugging under load voltage, 3-2
pulling under load voltage, 3-2
remove, 3-7
swinging out, 3-7
I/O modules, Coding for the ET 200U(FMS), 6-15–6-19
Identify, 6-12
IM 315, 3-9
IM 316, 3-9
IM 318–B, 2-2
connecting to a PS 931 power supply module, 3-15
connecting to a PS 935 power supply module, 3-15
IM 318–B interface module, 8-3
technical specifications, 8-4
IM 318–C, 6-1–6-42
Bus parameters for operation with the FMS protocol, 6-5
Combi–slave, 6-3
ET 200U with mixed configuration, 6-2
ET 200U(DP Standard), 6-2
ET 200U(FMS), 6-2
Modes, 6-2–6-7
Requirements for operating an IM 318–C, 6-5
Set station number, 6-8
Set switch 8, 6-8
Settings, 6-8
IM–FAULT LED, ET 200U(DP Standard), 5-29
“IM–FAULT” LED, ET 200U(DP Standard/FMS), 6-35
Index
in the static object list, 6-13
of a slot, 6-13
Indication, B-3

INDIVIDUAL DIAGNOSTICS screen
ET 200U(DP Siemens), 4-28
ET 200U(DP Standard), 5-31
Inherently short–circuit proof, B-3
Initiate, 6-11
Input, “Input” object, 6-14–6-18
Input module, connecting, 3-17
Input modules, connecting, 3-19
Input/output module, connecting, 3-21
Installing, 3-2, 3-3
Insulation monitoring, B-3
Interface modules, 8-14
interface module IM 315, 8-14
interface module IM 316, 8-15
technical specifications, 8-14, 8-15
Interference immunity, 3-9
IP 20, 1-3, B-4
IP 263 positioning module, technical specifications, 9-48
IP 265 high speed sub control, technical specifications, 9-55
IP 266 positioning module, 9-58
analog output, 9-58
installation, 9-62
operating modes, 9-60, 9-62
operation principle, 9-60
positioning, 9-61
pulse input, 9-58
technical specifications, 9-58
IP 267 stepper motor control module, 9-63
installation, 9-65
LEDs, 9-65
operation principle, 9-64
technical specifications, 9-63
Isolated, B-4

K

KBL. *See* List of communication links
KR. *See* Communication reference

L

LED
”BUS FAULT”, 2-2
”IM FAULT”, 2-2
”RUN”, 2-2
Length, B-4
Link attribute, 6-33
List of communication links, 6-30–6-36, B-4
Load power supply, 3-23, B-4
Local LSAP, 6-33
Loop resistance, B-4

M

Manufacturer identification, 4-33, 5-36
ET 200U(DP Siemens), 4-33
ET 200U(DP Standard), 5-36
ET 200U(DP Standard/FMS), 6-21
Master interface module, B-4
Master–slave access method, B-4
Max. PDU Size, 6-34
Modes of the IM 318–C, 6-2
Modifying an already configured slave station
ET 200U(DP Standard), 5-19
ET 200U(DPSiemens), 4-16
Modifying the configuration at a later point
ET 200U(DP Siemens), 4-15–4-17
ET 200U(DP Standard), 5-18–5-20
Module, comparator, 9-2
Module address
ET 200U(DP Siemens), 4-14
ET 200U(DP Standard), 5-14
Module diagnostics, 4-35, 4-36, 5-38, 5-39
“Module diagnostics” header, ET 200U(DP Standard/FMS), 6-23
ET 200U(DP Siemens), 4-35, 5-38
ET 200U(DP Standard/FMS), 6-23, 6-24

Multi–tier configuration
addressing, 3-11
in a cabinet, 3-10
with a row of devices, 3-10

N

NCM, B-4
Next available address
ET 200U(DP Siemens), 4-7
ET 200U(DP Standard), 5-7
Non–floating, B-4
Numbering, with multi–tier configuration, 3-11

O

Object, B-4
“diagnostics data”, 6-19–6-24
diagnostics message, 6-19
“diagnostics event”, 6-29–6-32
“DP inputs”, 6-27
“DP outputs”, 6-28
“FMS inputs”, 6-27
“FMS outputs”, 6-28
“Input” or “output” (slot), 6-14–6-18
“parameter data”, 6-25–6-26
Object code, B-4
Object list, 6-13–6-29, B-5
static object list, 6-13
structure, 6-13
Octet, B-5
Operating mode, 7-11, 7-12, 7-15
Output, “Output” object, 6-14–6-18
Output modules, connecting, 3-18, 3-20
OV. *See* Object list

P

Page addressing, B-5
Parameter data, “Parameter data” object, 6-25–6-26
Parameterization frame, ET 200U(DP Standard), 5-15
Parameters
ET 200U (DP Standard/FMS), result when removing or inserting I/O modules, 6-26
ET 200U(DP Standard/FMS)
evaluating the diagnostics data of modules with diagnostics capability, 6-26
I/O bus speed, 6-26
mode of the IM 318–C, 6-26
evaluation of diagnostics data, 5-16
I/O bus speed, 5-16
result when pulling or plugging–in modules, 5-16
Passive node, B-5
PDU, B-5
PDU Size, 6-34
PII, B-5
PIQ, B-5
Power supply, 3-23
configuration, 3-25
Power supply module, 8-6
PS 2410, 8-9
PS 931, 8-6
PS 935, 8-8
Power supply module PS 931, technical specifications, 8-6
Power supply module PS 935, technical specifications, 8-8
Power supply unit, switch–moded, 3-23
Process image, B-5
PROFIBUS, 1-2, **1-4**, 6-1–6-42, B-5
PROFIBUS, Part 2, Communications, 6-10–6-34
PROFIBUS–DP, 1-2, **1-4**, B-5
PROFIBUS–FMS, 1-5
Programming a link between an ET 200U(FMS) and a CP 5431 FMS, Example, 6-36–6-42
Protective conductor, B-5
Protocol Data Unit, B-5
PS 2410 power supply module, technical specifications, 8-10
PS 931 power supply module, 3-23
connecting to the main power, 3-15
installing, 3-4
PS 935 power supply module, 3-23
connecting to the main power, 3-15
installing, 3-4

R

RAC, 6-33
RADR, 6-33
RCC, 6-33
Read, 6-12
Reference earth, B-5
Reference potential, B-5
Reject, 6-11
Remote Address, 6-33
Remote SAP, 6-33

Repeater, B-5
Repeater adapter, B-6
Request, B-6
Resistance thermometer, connection, 7-10
Response time, B-6
RSAP, 6-33
“RUN” LED, ET 200U(DP Standard), 5-29
“RUN” LED, ET 200U(DP Standard/FMS), 6-35

S

SAC, 6-33
SAP, B-6
SCC, 6-33
Screen, ”CONFIGURING”, 4-6, 5-6
Screen impedance, B-6
Segment, B-6
Sensors/actuators profile, B-6
Service. *See* FMS service
Service Access Point, B-6
Set station number, IM 318–C, 6-8
Set switch 8, IM 318–C, 6-8
Setting the station number
ET 200U(DP Siemens), 4-18–4-19
ET 200U(DP Standard), 5-21–5-22
Short circuit, B-6
Short circuit proof, B-6
SIGUT screw type connections, 3-12
Simple–Variable, B-6
Simulator module
addressing, 9-9
function, 9-9
installation, 9-9
technical specifications, 9-8
typical application, 9-9
wiring, 9-9
SINEC L2, B-6
SINEC L2–DP, 1-2, 3-1, B-6
Slave initiation, B-6
Slave station, expanding at a later point, 4-15, 5-18
Slave station, already configured, expanding, 4-15, 5-18
Slot, “Input” or “Output” object (slot), 6-14–6-18
Slot numbering, 3-11
Slow Mode, 5-21
Slow mode, ET 200U(DP Siemens), 4-18
Speed of I/O bus
ET 200U(DP Siemens), 4-18–4-19
ET 200U(DP Standard), 5-21–5-22
SPM module, B-6
Standard draft, 1-2, **1-4**
Start–up
analog input module, 7-11
ET 200U(DP Siemens), 4-17–4-24
ET 200U(DP Standard), 5-20–5-27
Static object list, 6-13, B-6
Station diagnostics, 4-30, 4-34, 5-33, 5-37
ET 200U(DP Siemens), 4-34
ET 200U(DP Standard), 5-37
ET 200U(DP Standard/FMS), 6-22
“Station diagnostics” header, ET 200U (DP Standard/FMS), 6-22
Station number, B-7
Station number area
ET 200U(DP Siemens), 4-5
ET 200U(DP Standard), 5-5
Station number label, 2-2
Station status, 4-31, 5-34
ET 200U(DP Siemens), 4-31
ET 200U(DP Standard), 5-34
ET 200U(DP Standard/FMS), 6-20
Status, 6-12
STATUS function
ET 200U(DP Siemens), 4-23
ET 200U(DP Standard), 5-26
Stop/RUN switch, 2-2
Structure of diagnostics
ET 200U(DP Siemens), 4-30
ET 200U(DP Standard), 5-33
Structure of diagnostics data, ET 200U(DP Standard/FMS), 6-19
Structure of the object list, 6-13
Subindex, B-7
Switch, ”operating mode”, 7-11, 7-12, 7-15
Switch 8, 2-2
SYNC, B-7
SYSTEM START–UP/TEST: MODULE SELECTION screen
ET 200U(DP Siemens), 4-21
ET 200U(DP Standard), 5-24
SYSTEM START–UP/TEST: STATUS/ CONTROL screen
ET 200U(DP Standard), 5-25
ET 200U(DP–Siemens), 4-22

T

Technical specifications, general, 8-2
Terminating resistor, B-7
Test
    ET 200U(DP Siemens), 4-17–4-24
    ET 200U(DP Standard), 5-20–5-27
Thermocouple, connection, 7-5
Tiers, 3-9
Timer module, 9-5
    addressing, 9-6
    function, 9-6
    installation, 9-6
    technical specifications, 9-5
    typical application, 9-7
    wiring, 9-6
Transducer, connection, 7-8
Two–wire transducer, 7-3, 7-7
Type, 6-33
Type of link, 6-33
    BRCT, 6-33
    MSAZ, 6-33
    MSAZ_SI, 6-33
    MSZY, 6-33
    MSZY_SI, 6-33
    MULT, 6-33

U

Ungrounded configuration, B-7
Using LEDs to diagnose problems
    ET 200U(DP Siemens), 4-26
    ET 200U(DP Standard), 5-29
    ET 200U(DP Standard/FMS), 6-35

V

Voltage potentials in floating, 3-28
Voltage sensor, connection, 7-3, 7-5

W

Wiring, 3-12
Wiring methods, 3-12
Write, 6-12

Siemens AG AUT 125 Documentation P.O. Box 1963 D–92209 Amberg Federal Republic of Germany	Sender (Please fill out) Name Company/Department Address Telephone /
Suggestions: ☐ **Corrections:** ☐ ET 200U Distributed I/O Station Edition 3 (6ES5 998–5ET21)	

Have you found any typographical errors while reading this manual? Please use this form to tell us about them.
We would also welcome any ideas and suggestions you may have.

- - - -