SIEMENS

Data Sheet

Heavy Duty Safety Switch

400A 240V, Type 3R

usa.siemens.com/switches

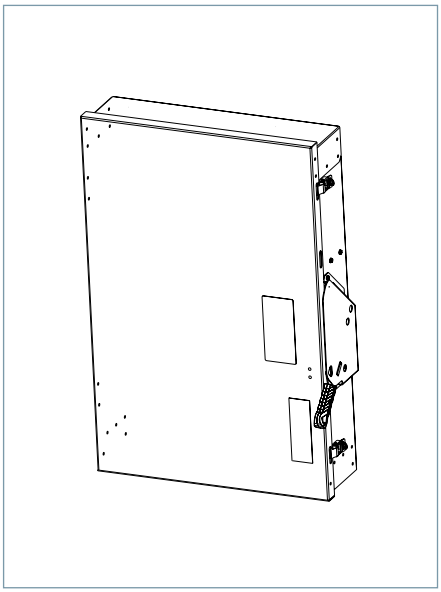

Standards and Ratings

- UL listed under file #E4776
- CSA listed under file #154852
- Meets NEMA Standard KS-1 for enclosed switches
- Meets NEC wire bending space requirements
- Rated 10,000 AIC as standard or 200,000 when protected by Class R, T or J fuses rated 400 amp maximum
- I2t rated (Amps2 x Seconds = 6,000,000)
- 12X overload current rating exceeds 10X industry standard
- Suitable for use as service entrance equipment
- Includes internal shields which meet 2020 NEC 230.62 touch safe requirements for service entrance equipment.

Features

- Quick-make and break switching action
- Visible blade design
- Highly visible ON/OFF indication
- Modular design allows quick and easy replacement of parts
- Defeatable dual cover interlock
- Compact one piece light weight construction enables easier installation
- Can utilize either one large or two small wires
- Spring loaded heat sink fuse clip
- One piece line and load base for consistent phase-to-phase allignment
- Extra ground lug on neutral
- Tangential knock out
- Lay in Lugs for easy wiring
- Window permits viewing of visible blade

Product Specifications

Heavy Duty 400A 240V, Type 3R

General Information

Catalog Number	Description	Shipping Weight
HF325NRA	Heavy Duty Fused 3 Pole 240V 400A Neutral Type 3R, Outdoor	94.6
HF225NRA	Heavy Duty Fused 2 Pole 240V 400A Neutral Type 3R, Outdoor	91.1
HFC225NRA	CSA Heavy Duty Fused 2 Pole 240V 400A Neutral Type 3R, Outdoor	91.1
HFC325NRA	CSA Heavy Duty Fused 3 Pole 240V 400A Neutral Type 3R, Outdoor	94.6

Maximum Horsepower Ratings

Catalog Number	1 Phase, 240V AC	3 Phase, 240V AC	1 Phase, 480V AC	3 Phase, 480V AC	1 Phase, 600V AC	3 Phase, 600V AC	250V DC	600V DC
HF325NRA	—	125	—	—	—	—	50	—
HF225NRA	—	125	—	—	—	—	50	—
HFC225NRA	—	125	—	—	—	—	50	—
HFC325NRA	—	125	—	—	—	—	50	—

Accessories & Hub Kits

Catalog Number	Description
HA161234	Aux. Switch (1NO - 1NC)
HA261234	Aux. Switch (2NO - 2NC)
HA361234	Low Voltage Aux. SW. (1NO - 1NC)
HN656A	Neutral
HN656A	200% Neutral
HG656A	Ground Lug
HG2656A	Isolated Ground
HR65A	R Fuse (400A)
HT25A	T Fuse (400A, 300V)
HCM65A	Field Replacement Kit (400A, fused)
HVGK	Hub Gasket Kit
ECHV250	2.50" Type "HV" Outdoor Hub
ECHV300	3.00" Type "HV" Outdoor Hub
ECHV350	3.50" Type "HV" Outdoor Hub
ECHV400	4.00" Type "HV" Outdoor Hub
HCU656A	Copper Lug Kit ①

Replacement Parts

Catalog Number	Description
HFB65A	Line Base Fused 400A
HBB65A	Load Base Fused 400A
HL656A	Lug Cap Kit (AL) 400-600A
HM656A	Mechanism 400A-600A
HH656A	Handle/Handle Guard 400A-600A
Catalog Number + "DOOR"	Door
HNB656A	Replacement Non-Fusible Line Base 400-600A

Mechanical Lug Wire Ranges

Description	Wire Range with Wire Bending Space ②	Lug Wire Range per NEC® requirements ②
Line and Load Terminals (Fusible)	(1) 1/0 AWG - 600 kcmil or (2) 1/0 AWG - 500kcmil	(2) 1/0 AWG - 750 kcmil

Mechanical Lug Wire Ranges

Description	Wire Range
100% Neutral	(1) 1/0 - 600 Kcmil or (1) 6 - 300 Kcmil
200% Neutral	(2) 1/0 - 600 Kcmil or (2) 6 - 300 Kcmil
Equipment Ground	(2) 14 - 2/0 AWG

① Purchase field replacement kit along with lugs. (See Speedfax pg. 4-20)
② Line and load lugs are UL approved to grip two wires per lug. There are two lugs on each line and load end per pole on this device.

Dimension Drawings

Heavy Duty 400A 240V, Type 3R (Fusible)

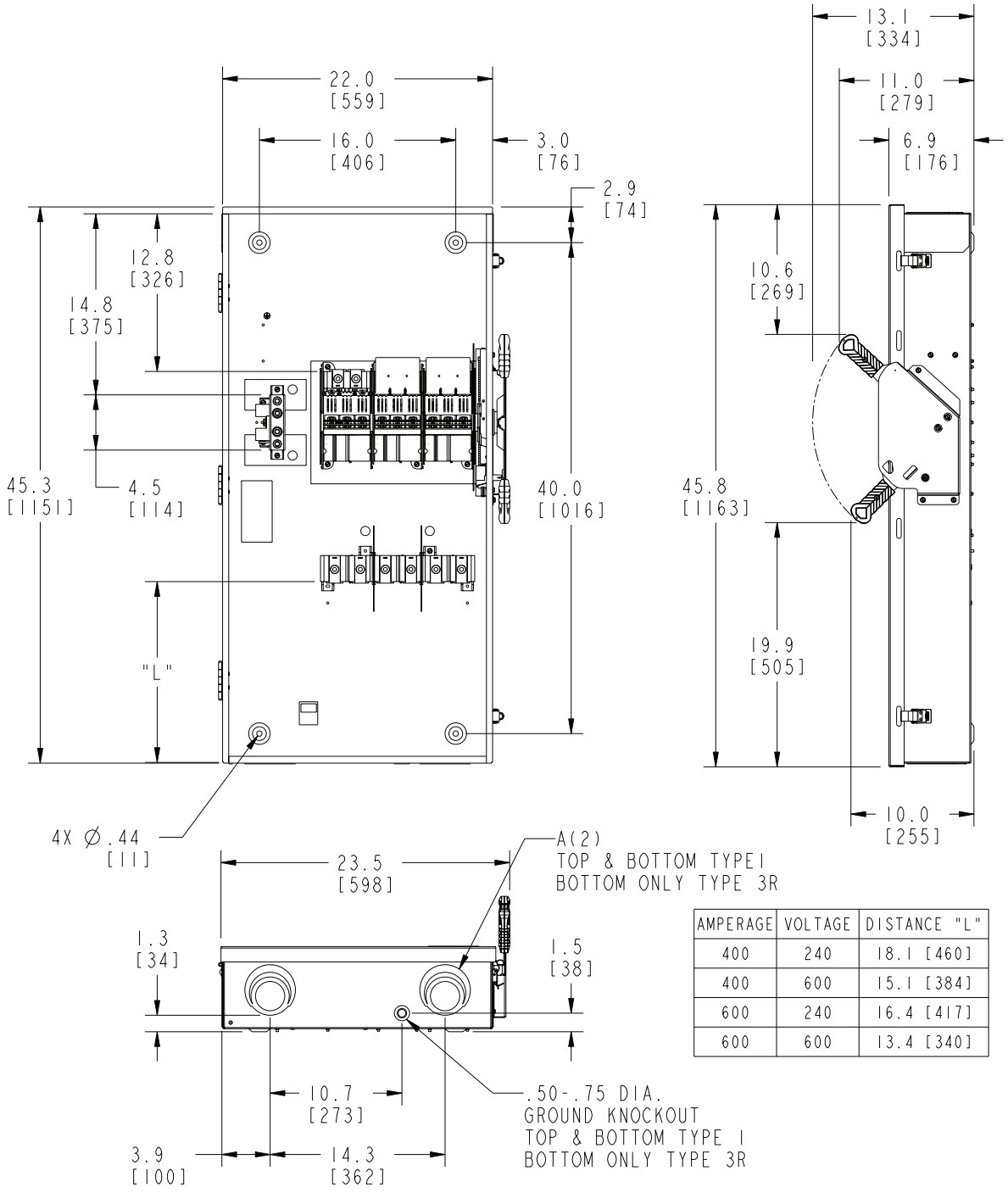

AMPERAGE	VOLTAGE	DISTANCE "L"
400	240	18.1 [460]
400	600	15.1 [384]
600	240	16.4 [417]
600	600	13.4 [340]

Dimensions shown in inches
and millimeters [ ].
Dimensions shown accurate to ± 1/8 inch.

KNOCKOUT CODE	CONDUIT SIZE
A (Tangential)	2.00 2.50 3.00 3.50

Enclosure:
Cold Rolled Steel Type 1
Galvanized Steel Type 3R
.060 thick (16 gauge)
Finish: ANSI Grey #61 Paint

Published by
Siemens 2021

Siemens Industry, Inc.
3617 Parkway Ln.
Peachtree Corners, GA 30092

Siemens Technical Support: 1-800-333-7421
info.us@siemens.com
Order No. SSFL-H423R-0321
Printed in USA-CP
All Rights Reserved
© 2021, Siemens Industry, Inc.
usa.siemens.com/switches

The technical data presented in this document is based on an actual case or on as-designed parameters, and therefore should not be relied upon for any specific application and does not constitute a performance guarantee for any projects. Actual results are dependent on variable conditions. Accordingly, Siemens does not make representations, warranties, or assurances as to the accuracy, currency or completeness of the content contained herein. If requested, we will provide specific technical data or specifications with respect to any customer's particular applications. Our company is constantly involved in engineering and development. For that reason, we reserve the right to modify, at any time, the technology and product specifications contained herein.