SIEMENS

Data sheet 3VA9277-0HA10

motor operator 24-60 V DC accessory for: 3VA52; 3VA61/62



Model	
product brand name	SENTRON
accessories	Motorized operating mechanism (MO)
General technical data	
make time / typical	1 s
break time / typical	1 s
Voltage	
type of voltage / of the operating voltage / for actuation	DC
Rated control supply voltage Us with DC	
● minimum	24 V
● maximal	60 V
operating apparent power	250 VA
Mechanical Design	
height	75 mm
width	105 mm
depth	132 mm
connectable conductor cross-section / solid	
● minimum	1.5 mm²
● maximum	2.5 mm²
connectable conductor cross-section / finely stranded / with core end processing	
● minimum	1.5 mm²
● maximum	2.5 mm²
connectable conductor cross-section / stranded	
● minimum	1.5 mm²
● maximum	2.5 mm²
ambient temperature / during operation	
● minimum	-25 °C
● maximum	70 °C
ambient temperature / during storage	
● minimum	-40 °C
● maximum	80 °C
tightening torque	
● minimum	0.36 N·m
● maximum	0.44 N·m
ambient temperature / during storage	
● minimum	-40 °C
● maximum	80 °C
Connections according IEC	
stripped length	7 mm

Subject to change without notice
© Copyright Siemens

Certificates

General Product Approval					EMV
CE EG-Konf.	UKCA	UL	Miscellaneous	EAC	RCM

Marine / Shipping	other			Dangerous Good	Environment
Lloyd's Register LRS	Confirmation	Miscellaneous	Miscellaneous	Transport Information	Environmental Confirmations

Further information

Information on the packaging
https://support.industry.siemens.com/cs/ww/en/view/109813875
Information- and Downloadcenter (Catalogs, Brochures,…)
http://www.siemens.com/lowvoltage/catalogs
Industry Mall (Online ordering system)
https://mall.industry.siemens.com/mall/en/en/Catalog/product?mlfb=3VA9277-0HA10
Service&Support (Manuals, Certificates, Characteristics, FAQs,...)
https://support.industry.siemens.com/cs/ww/en/ps/3VA9277-0HA10
Image database (product images, 2D dimension drawings, 3D models, device circuit diagrams, ...)
http://www.automation.siemens.com/bilddb/cax_en.aspx?mlfb=3VA9277-0HA10
CAx-Online-Generator
http://www.siemens.com/cax
Tender specifications
http://www.siemens.com/specifications

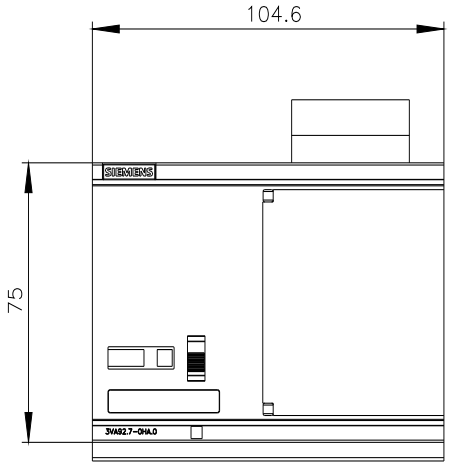

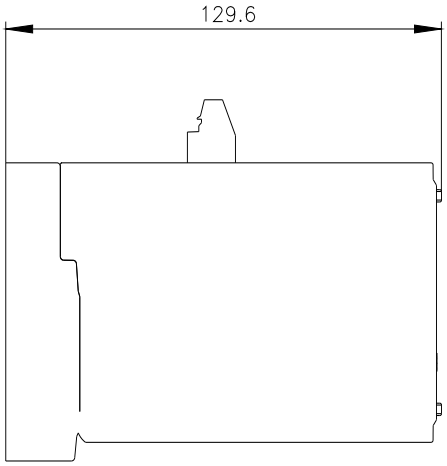

Subject to change without notice
© Copyright Siemens

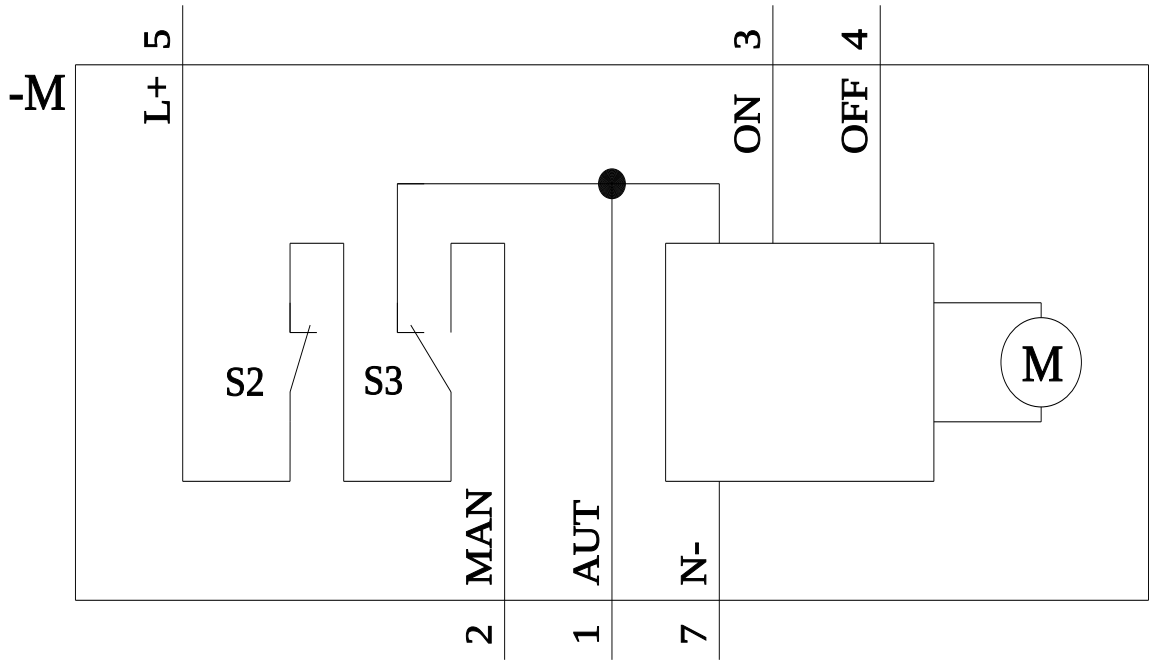

last modified: 8/15/2023

Subject to change without notice
© Copyright Siemens

Subject to change without notice
© Copyright Siemens