

SINGLE FAMILY METERING

Meter Mains and Combos to aid compliance with 2020 NEC®

Considering the specifics of the National Electrical Code (NEC) 2020, Siemens updated the 400A single-family meter combo portfolio. Overall, the changes to the NEC are aimed at improving safety and clarity for those working with service disconnecting means. The new requirements for grouped disconnects are intended to help ensure that these important safety features are properly installed and easily accessible when needed in order to be safely operated.

Code Section and new features:

- Section 230.62 – Line terminal barriers
- Section 230.71 – Separate compartments for disconnects
- Section 230.82 – Emergency disconnect labeling (included in carton)

usa.siemens.com/residential

SIEMENS

Features

Meter Mains

- (2) service disconnects in separate compartments
- Increased flexibility with field installed main breakers
- Meter socket rating: 320A continuous, 400A Max.
- 1 phase, 3 wire, 120/240V
- Applicable for Overhead and Underground or Underground Only service feed
- 200A Max for PV or alternate energy EUSERC applications

Meter Combos

- (2) service disconnects in separate compartments
- Increased flexibility with factory installed load center main breaker and field installed main breaker for a second load center
- Meter socket rating: 320A continuous, 400A Max.
- 1 phase, 3 wire, 120/240V
- Applicable for overhead and underground

400A Meter Mains

Catalog Number	Amp Rating (Cont.)	Utility Incoming	Bypass Type	No. of Spaces	No. of Circuits	Dimensions (inches)			Short Circuit Rating	Mounting	Cover Type	Field Installed Main Breakers
						Height	Width	Depth				
MK0402L1400RLM	320	OH/UG	Lever	4	2	29	27.27	6.37	22,000	Surface	Ringless	QP, QN, QPH, QNH, HQP, HQN
MK0402L1400SC			None			34	43	8			Ring Type	QP, QN, QNR, QPH, QNH, QNRH
MK0402L1400SCS			Manual			34	43	8			Ring Type	QP, QN, QNR, QPH, QNH, QNRH

400A Solar Ready Meter Mains

Catalog Number	Amp Rating (Cont.)	Utility Incoming	Bypass Type	No. of Spaces	No. of Circuits	Dimensions (inches)			Short Circuit Rating	Mounting	Cover Type	Field Installed Main Breakers	Field Installed PV Main Breaker
						Height	Width	Depth					
MK0603S1400SC	320	OH/UG	None	6	3	42	43.75	9	22,000	Surface	Ring Type	QP, QN, QNR, QPH, QNH, QNRH	QP, QN, QPH, QNH
MK0603S1400SD	320	UG				40.5	40.5	8			Ring Type	QP, QN, QNR, QPH, QNH, QNRH	QP, QN, QPH, QNH
MK0603S1400SCS	320	OH/UG	Manual			42	43.75	9			Ring Type	QP, QN, QNR, QPH, QNH, QNRH	QP, QN, QPH, QNH
MK0603S1400SDS	320	UG				42	43.75	9			Ring Type	QP, QN, QNR, QPH, QNH, QNRH	QP, QN, QPH, QNH

400A Meter Combos

Catalog Number	Amp Rating (Cont.)	Utility Incoming	Bypass Type	No. of Spaces	No. of Circuits	Dimensions (inches)			Short Circuit Rating	Mounting	Cover Type	Field Installed Main Breaker
						Height	Width	Depth				
MK0816B1400RLT	320	OH/UG	Lever	8	16	29.17	34.15	6.31	22,000	Surface	Ringless	QP, QN, QPH, QNH
MK2448B1400RL				24	48	29.17	34.15	6.31			Ringless	QP, QN, QPH, QNH
MK2448B1400SC			None	24	48	39.56	39.43	6.28			Ring Type	QP, QN, QNR, QPH, QNH, QNRH
MK3042B1400SC				30	42	39.56	39.43	6.28			Ring Type	QP, QN, QNR, QPH, QNH, QNRH
MK2448B1400SCS			Manual	24	48	39.56	39.43	6.28			Ring Type	QP, QN, QNR, QPH, QNH, QNRH
MK3042B1400SCS				30	42	39.56	39.43	6.28			Ring Type	QP, QN, QNR, QPH, QNH, QNRH

SIEMENS

Dimensions and Wiring Schematics

Meter Mains

MK0402L1400RLM

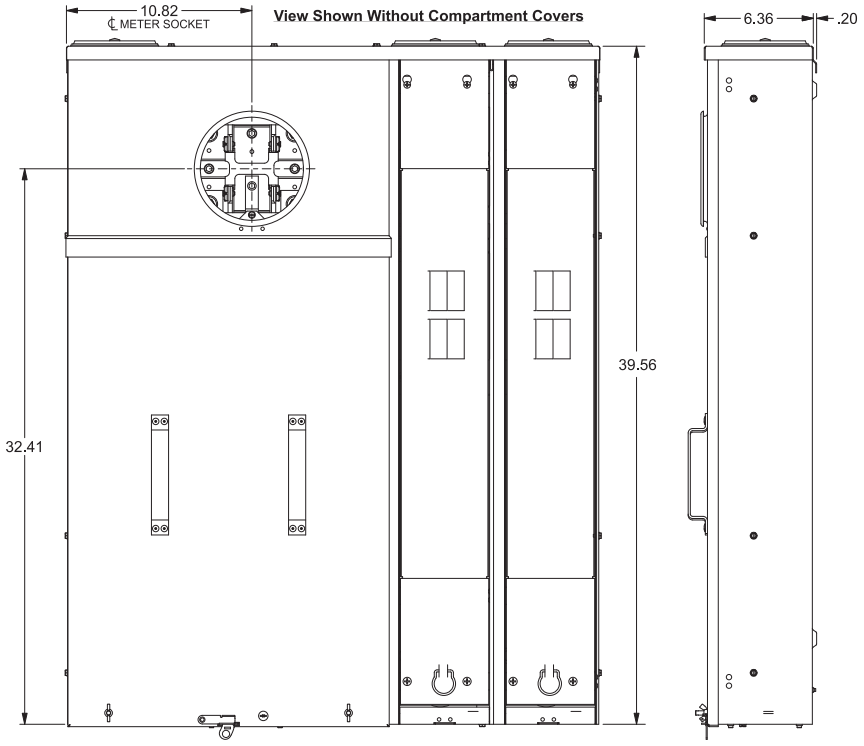

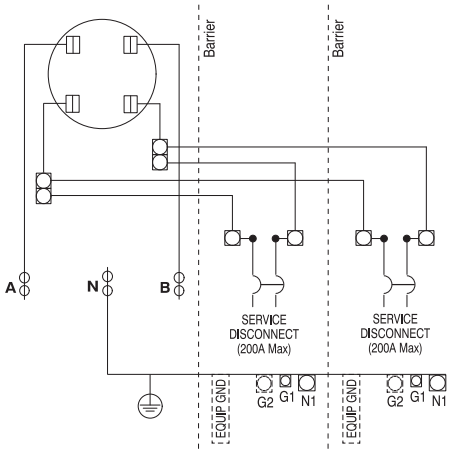

MK0603L1400SC

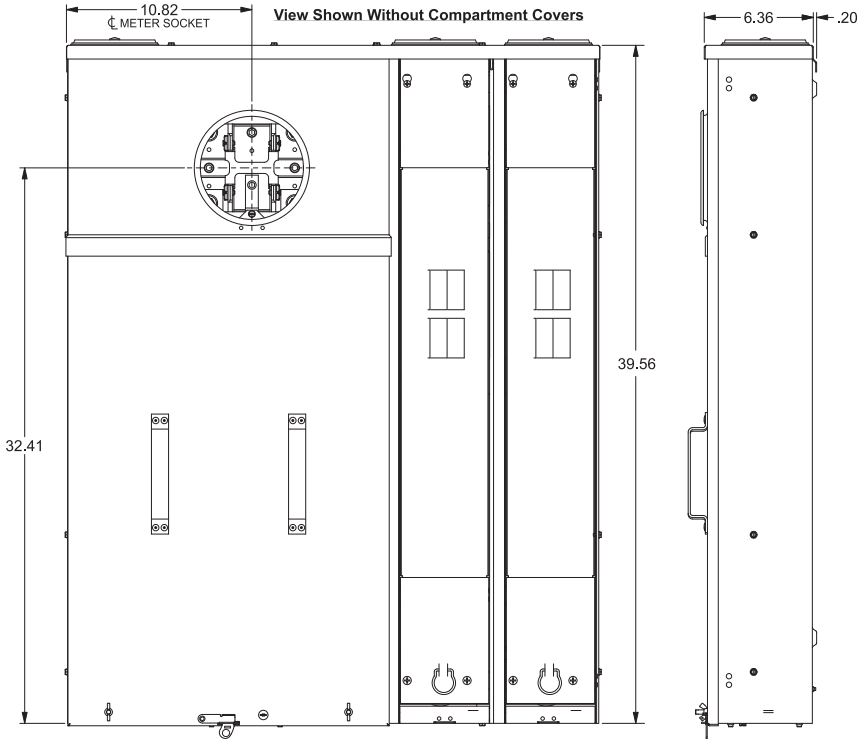

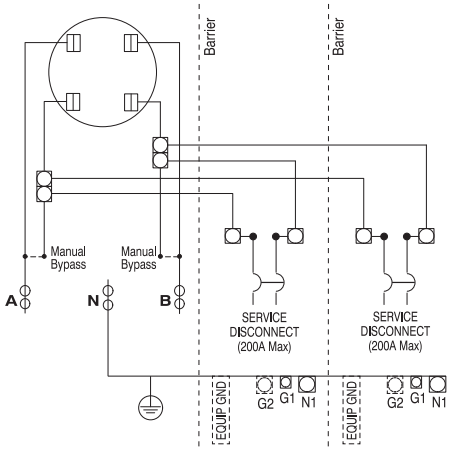

SIEMENS

Dimensions and Wiring Schematics (continued)

Meter Combos

MK0816B1400RLT

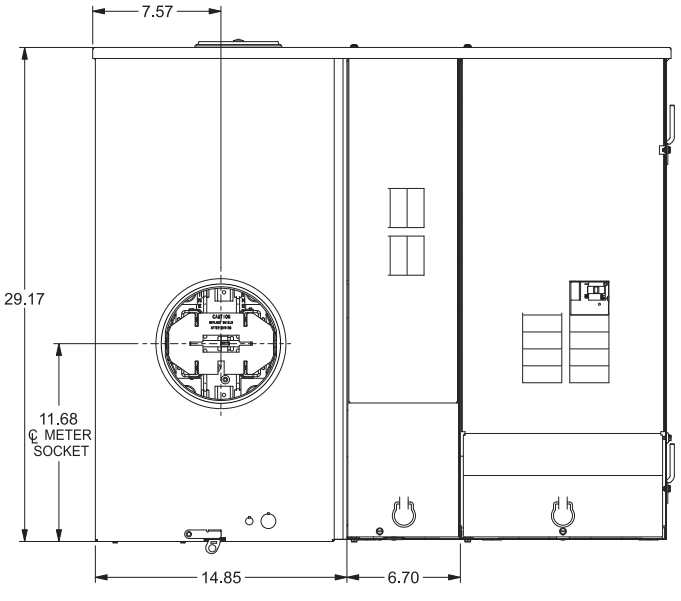

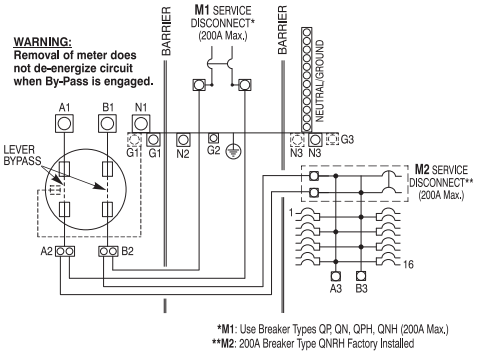

MK3042B1400SC

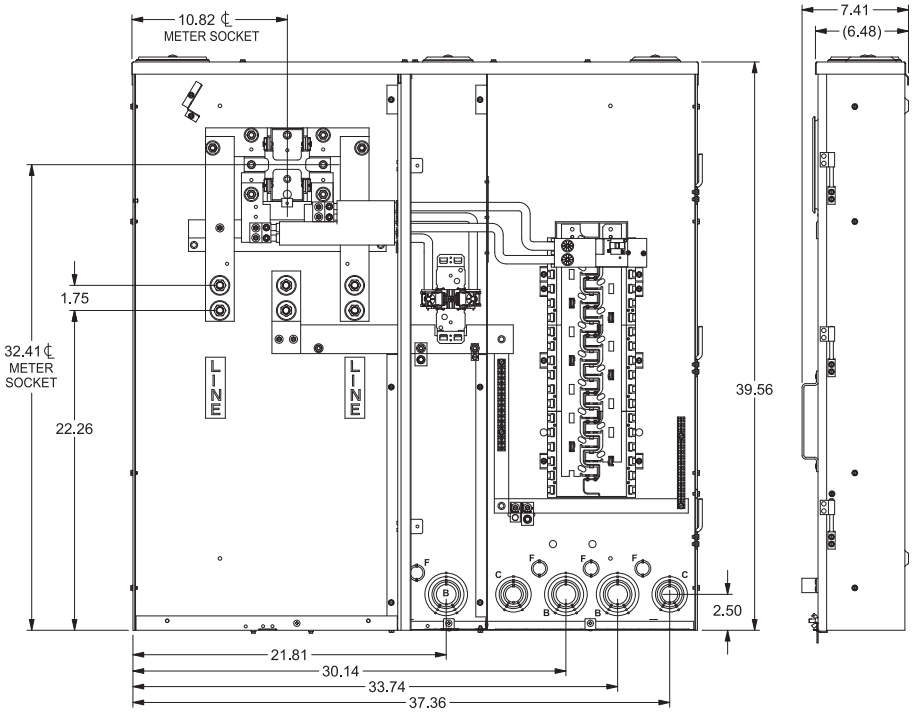

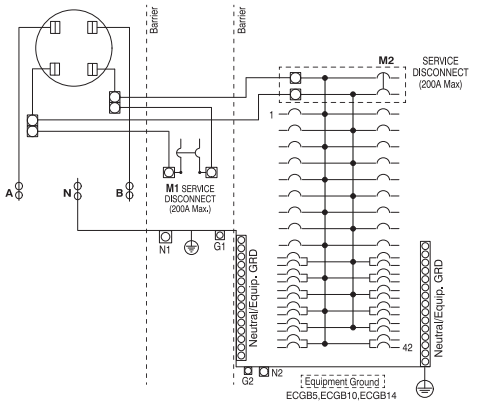

Legal Manufacturer

Siemens Industry, Inc.
3617 Parkway Ln
Peachtree Corners, GA 30092
United States of America

Telephone: +1 (800) 333-7421
www.usa.siemens.com/residential

Order No. RPFL-NECMM-0225
© 02.2025, Siemens Industry, Inc.

This document contains a general description of available technical options only, and its effectiveness will be subject to specific variables including field conditions and project parameters. Siemens does not make representations, warranties, or assurances as to the accuracy or completeness of the content contained herein. Siemens reserves the right to modify the technology and product specifications in its sole discretion without advance notice.

SIEMENS