SIEMENS

Data sheet US2:CLM1C06120



Mechanically held lighting contactor, Contactor amp rating 30A, 0 N.C. / 6 N.O. poles, 110VAC 50HZ/120VAC 60HZ coil, Non-combination type, Enclosure NEMA type 1, Indoor general purpose use

product brand name	Class CLM
design of the product	Magnetically latched lighting contactor
special product feature	Energy efficient; Quiet operation
General technical data	
weight [lb]	20 lb
Height x Width x Depth [in]	16 × 17 × 8 in
touch protection against electrical shock	NA for enclosed products
installation altitude [ft] at height above sea level maximum	6560 ft
country of origin	USA
Contactor	
size of contactor	30 Amp
number of NO contacts for main contacts	6
number of NC contacts for main contacts	0
operating voltage for main current circuit at AC at 60 Hz maximum	600 V
mechanical service life (operating cycles) of the main contacts typical	10000000
contact rating of the main contacts of lighting contactor	
● at tungsten (1 pole per 1 phase) rated value	30A @277V 1p 1ph
● at tungsten (2 poles per 1 phase) rated value	30A @480V 2p 1ph
● at tungsten (3 poles per 3 phases) rated value	30A @480V 3p 3ph
● at ballast (1 pole per 1 phase) rated value	30A @347V 1p 1ph
● at ballast (2 poles per 1 phase) rated value	30A @600V 2p 1ph
● at ballast (3 poles per 3 phases) rated value	30A @600V 3p 3ph
● at resistive load (1 pole per 1 phase) rated value	30A @347V 1p 1ph
● at resistive load (2 poles per 1 phase) rated value	30A @600V 2p 1ph
● at resistive load (3 poles per 3 phases) rated value	30A @600V 3p 3ph
Auxiliary contact	
number of NC contacts for auxiliary contacts	0
number of NO contacts for auxiliary contacts	0
number of total auxiliary contacts maximum	4
contact rating of auxiliary contacts of contactor according to UL	NA
Coil	
type of voltage of the control supply voltage	AC
control supply voltage	
● at AC at 50 Hz rated value	110 V
● at AC at 60 Hz rated value	120 V
apparent pick-up power of magnet coil at AC	820 VA
apparent holding power of magnet coil at AC	80 VA

Subject to change without notice
© Copyright Siemens

operating range factor control supply voltage rated value of magnet coil	0.85 ... 1.1
Enclosure	
degree of protection NEMA rating of the enclosure	NEMA 1 enclosure
design of the housing	indoors, usable on a general basis
Mounting/wiring	
mounting position	Vertical
fastening method	Surface mounting and installation
type of electrical connection for supply voltage line-side	Screw-type terminals
tightening torque [lbf·in] for supply	18 ... 20 lbf·in
type of connectable conductor cross-sections at line-side for AWG cables single or multi-stranded	2x (14 ... 8 AWG)
temperature of the conductor for supply maximum permissible	75 °C
material of the conductor for supply	CU
type of electrical connection for load-side outgoing feeder	Screw-type terminals
tightening torque [lbf·in] for load-side outgoing feeder	18 ... 20 lbf·in
type of connectable conductor cross-sections for AWG cables for load-side outgoing feeder single or multi-stranded	2x (14 ... 8 AWG)
temperature of the conductor for load-side outgoing feeder maximum permissible	75 °C
material of the conductor for load-side outgoing feeder	CU
type of electrical connection of magnet coil	Screw-type terminals
tightening torque [lbf·in] at magnet coil	8 ... 12 lbf·in
type of connectable conductor cross-sections of magnet coil for AWG cables single or multi-stranded	2x (16 ... 12 AWG)
temperature of the conductor at magnet coil maximum permissible	75 °C
material of the conductor at magnet coil	CU
Short-circuit current rating	
design of the fuse link for short-circuit protection of the main circuit required	none
design of the short-circuit trip	Thermal magnetic circuit breaker
maximum short-circuit current breaking capacity (Icu)	
• at 240 V	5 kA
• at 480 V	5 kA
• at 600 V	5 kA
certificate of suitability	NEMA ICS 2; UL 508A
Approvals Certificates	
Test Certificates	

UL

Further information

Industrial Controls - Product Overview (Catalogs, Brochures,…)
www.usa.siemens.com/iccatalog
Industry Mall (Online ordering system)
https://mall.industry.siemens.com/mall/en/us/Catalog/product?mlfb=US2:CLM1C06120
Service&Support (Manuals, Certificates, Characteristics, FAQs,...)
https://support.industry.siemens.com/cs/US/en/ps/US2:CLM1C06120
Image database (product images, 2D dimension drawings, 3D models, device circuit diagrams, EPLAN macros, ...)
https://www.automation.siemens.com/bilddb/cax_de.aspx?mlfb=US2:CLM1C06120&lang=en
Certificates/approvals
https://support.industry.siemens.com/cs/US/en/ps/US2:CLM1C06120/certificate

© Copyright Siemens

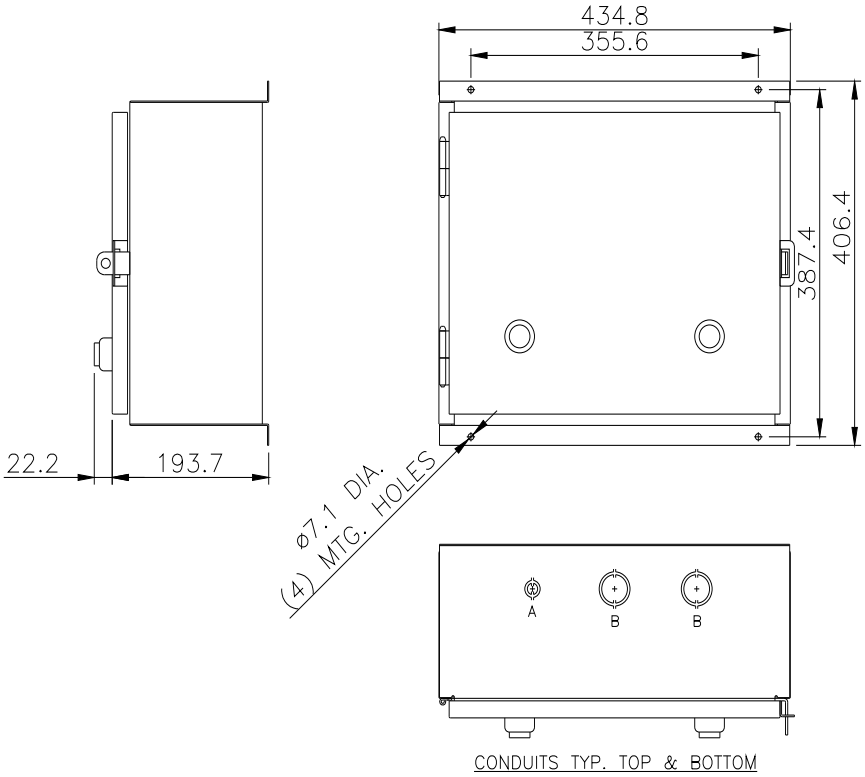

LETTER	CONDUIT SIZE
A	ø12.7 & ø19 CONDUIT
B	ø31.8 & ø38.1 CONDUIT

Wiring Diagram Class CLM
30-60 Amp 6 Pole

To Control Devices

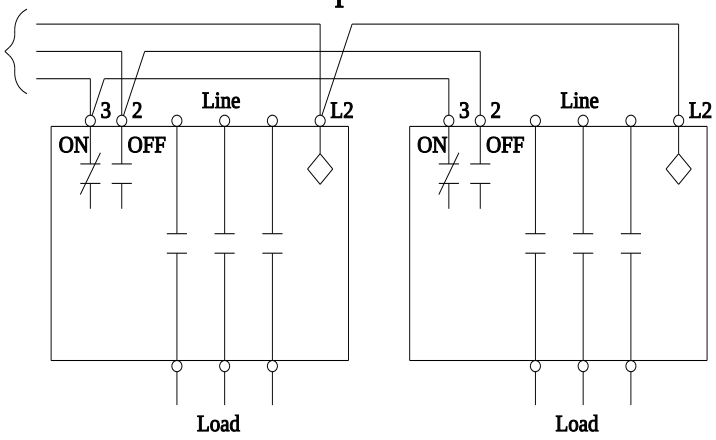

Optional auxiliary contacts are not shown.

E87010-A0410-T009-A1-CLM-2

last modified: 10/23/2025

Subject to change without notice
© Copyright Siemens

Subject to change without notice
© Copyright Siemens