

DATA SHEET

QNR Circuit Breaker

usa.siemens.com/residential-main-breakers

The new circuit breaker family QN2150R thru QN2225R offers the latest in thermal-magnetic circuit breaker design. It directly replaces the now obsolete fully magnetic sensing QPM2150RV thru QPM2200RV and QPJ2150 thru QPJ2200 circuit breaker families. In this new design the handle returns to the center (trip) position similar to our other thermal trip circuit breakers. With a thermal sensing design and blow-off contacts, this circuit breaker offers a higher level of protection because the circuit breaker trip time adjusts to the temperature of the attached wire, while keeping the magnetic characteristic that assures a quick trip under high current conditions.

Features and Benefits

- UL listed per UL489.
- Form, Fit and Function replacement for our present Siemens Type QPM and QPJ circuit breakers.
- Interrupt rating of 10KA or 22KA (black handle) or 65KA (grey handle).
- Branch circuit breaker for Siemens Single Phase Load Center.

SIEMENS

Technical Specifications

These circuit breakers are UL listed per Standard 489 and meet the requirements of the National Electrical Code@. Circuit breakers are available from 150 amps to 225 amps at 120/240V AC. These circuit breakers require 4 panel spaces, 2 adjacent and 2 opposite. A shunt trip version is available on special order. See diagram below for dimensions.

Selection Information

2-Pole, 120/240V AC

Ampere Rating	Catalog Number	AIC	Std. Quantity	Approx. Weight (lbs.) [1]	Wire Range
150	QN2150R	10K	1	3	#4 -300 kcmil Cu/Al
175	QN2175R	10K	1	3	#4 - 300 kcmil Cu/Al
200	QN2200R	10K	1	3	#4 - 300 kcmil Cu/Al
225	QN2225R	10K	1	3	#4 - 300 kcmil Cu/Al
150	QN2150RH	22K	1	3	#4 - 300 kcmil Cu/Al
175	QN2175RH	22K	1	3	#4 - 300 kcmil Cu/Al
200	QN2200RH	22K	1	3	#4 - 300 kcmil Cu/Al
225	QN2225RH	22K	1	3	#4 - 300 kcmil Cu/Al
150	HQN2150R	65K	1	3	#4 - 300 kcmil Cu/Al
175	HQN2175R	65K	1	3	#4 - 300 kcmil Cu/Al
200	HQN2200R	65K	1	3	#4 - 300 kcmil Cu/Al
225	HQN2225R	65K	1	3	#4 - 300 kcmil Cu/Al

[1] Shipping carton weight.

Dimensions

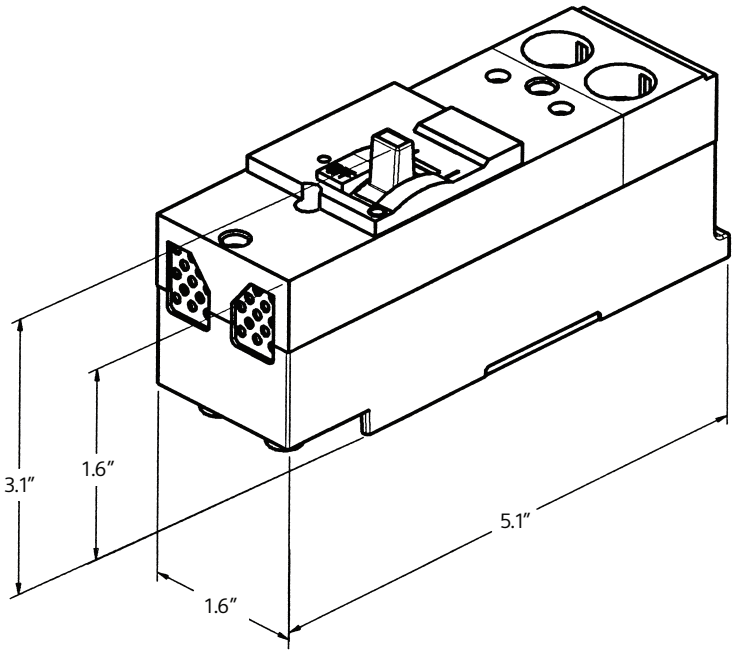

Legal Manufacturer

Siemens Industry, Inc.
3617 Parkway Ln
Peachtree Corners, GA 30092
United States of America

Telephone: +1 (800) 333-7421
usa.siemens.com/residential-main-breakers

Order No. RPPN-S0005-0423
© 04.2023, Siemens Industry, Inc.

This document contains a general description of available technical options only, and its effectiveness will be subject to specific variables including field conditions and project parameters. Siemens does not make representations, warranties, or assurances as to the accuracy or completeness of the content contained herein. Siemens reserves the right to modify the technology and product specifications in its sole discretion without advance notice.

SIEMENS