SIEMENS

Data sheet 5TT3440

Soft starting device 400 V AC 300-5500W 3PH Overall depth 55 mm



Model	
product brand name	SENTRON
product designation	Soft-starting device
design of the product	55 mm
Supply voltage	
type of voltage	AC
operating voltage / rated value	
• minimum	230 V
• maximum	230 V
Dissipation	
power loss [W]	4.6 W
power loss [W] / for rated value of the current / at AC / in hot operating state / per pole	4.6 W
Control current	
control supply voltage	
• at AC / at 50 Hz / rated value / minimum	230 V
• at AC / at 50 Hz / rated value / maximum	230 V
• at AC / at 60 Hz / rated value / minimum	230 V

Subject to change without notice
© Copyright Siemens

• at AC / at 60 Hz / rated value / maximum	230 V

Product function

product function / motor overload protection	No

Mechanical Design

height	90 mm
width	105 mm
depth	55 mm
net weight	450 g

Environmental conditions

ambient temperature / without derating / rated value	55 °C

Certificates

reference code	
• acc. to DIN EN 61346-2	Q
• acc. to IEC 81346-2	Q

Declaration of Conformity	other
	Environmental Confirmations Miscellaneous

CE
EG-Konf.

Further information

Information- and Downloadcenter (Catalogs, Brochures,…)
http://www.siemens.com/lowvoltage/catalogs

Industry Mall (Online ordering system)
https://mall.industry.siemens.com/mall/en/en/Catalog/product?mlfb=5TT3440

Service&Support (Manuals, Certificates, Characteristics, FAQs,...)
https://support.industry.siemens.com/cs/ww/en/ps/5TT3440

Image database (product images, 2D dimension drawings, 3D models, device circuit diagrams, ...)
http://www.automation.siemens.com/bilddb/cax_en.aspx?mlfb=5TT3440

CAx-Online-Generator
http://www.siemens.com/cax

Tender specifications
http://www.siemens.com/specifications

Subject to change without notice
© Copyright Siemens

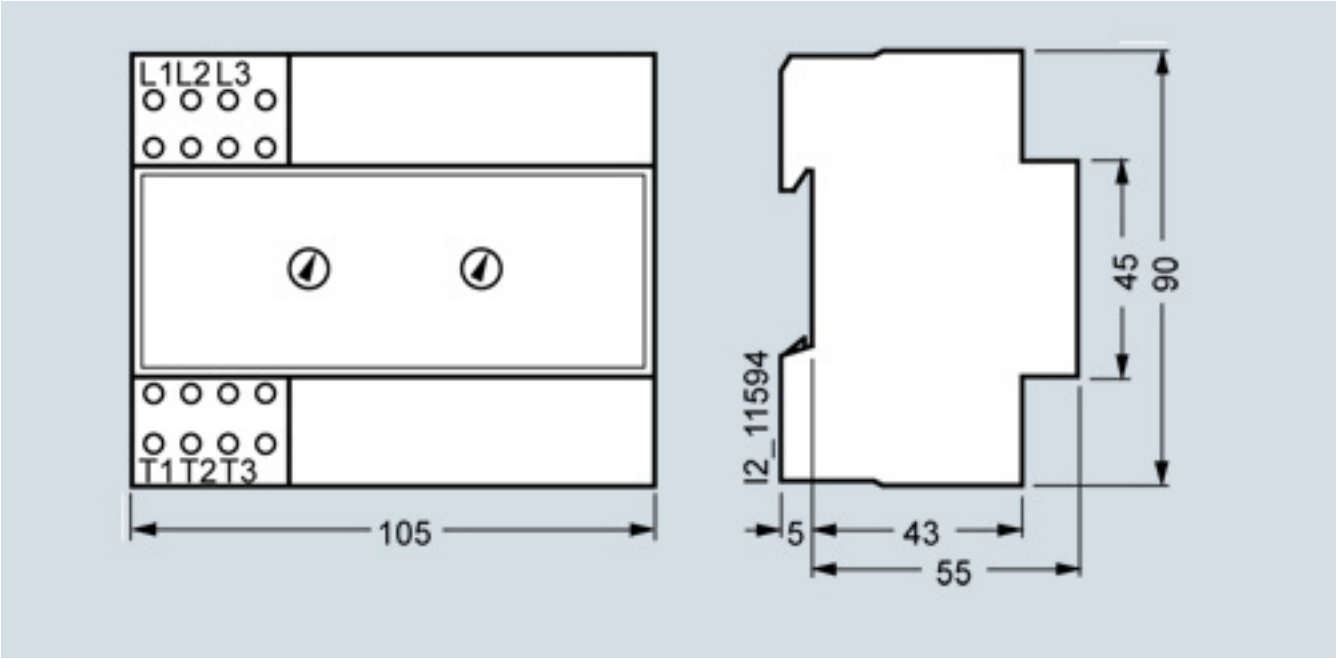

Subject to change without notice
© Copyright Siemens