SIEMENS

	U.S. Cat. No.	Euro Order No.	U.S. Cat. No.	Euro Order No.
Item:	NGSD060	3VL9206-8TT01	NGSL400	3VL9440-8TT01
	NGSF100	3VL9310-8TT01	NGSM600	3VL9660-8TT01
	NGSF150	3VL9315-8TT01	NGSN800	3VL9780-8TT01
	NGSJ250	3VL9425-8TT01	NGSP120	3VL9812-8TT01
			NGSP160	3VL9816-8TT01

Neutral Current Transformer

Transformador de intensidad para el conductor

Transformateur de courant du neutre pour déclencheur electronique

For Use With Frame DG - PG

Para Usar Con Caja Base DG – PG

Installation Instructions / Instructivo de Instalación

⚠ Danger	⚠ Peligro	⚠ Danger
Hazardous Voltage. **Will cause death or serious injury.** Turn off and lock out all power supplying this device before working on this device. Replace all covers before power supplying this device is turned on.	**Tensión peligrosa.** **Puede causar la muerte o lesiones graves.** Desenergice totalmente antes de instalar o darle servicio. Reemplace todas las barreras y cubiertas antes de energizar el interruptor.	**Tension dangereuse.** **Danger de mort ou risque de blessures graves.** Couper l'alimentation de l'appareil et barrer avant de travailler. Remplacez touts les couverts avant que l'approvisionnement de pouvoir soit alimenté.

Use only with Siemens certified Components.

Utilizar únicamente con componentes certificados de Siemens.

A utiliser uniquement avec les composants certifiés Siemens.

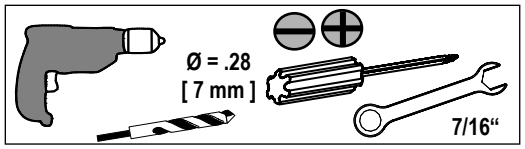

Neutral Sensor [Sensor Neutral]	Frame [Caja Base]	Trip Unit Rating [Rango de unidad de disparo]	Neutral Catalog No. [Numero de catalogo del neutral]	MLFB No. [Numero de MLFB]
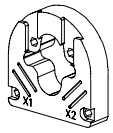	DG	60A	NGSD060	3VL9206-8TT01
		100A	NGSF100	3VL9310-8TT01
		150A	NGSF150	3VL9315-8TT01
	FG	100A	NGSF100	3VL9310-8TT01
		150A	NGSF150	3VL9315-8TT01
		250	NGSJ250	3VL9425-8TT01
	JG	250A	NGSJ250	3VL9425-8TT01
		400A	NGSL400	3VL9440-8TT01
	LG	400A	NGSL400	3VL9440-8TT01
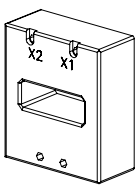	LG	600A	NGSM600	3VL9660-8TT01
	MG	600A	NGSM600	3VL9660-8TT01
		800A	NGSN800	3VL9780-8TT01
	NG	800A	NGSN800	3VL9780-8TT01
		1000A	NGSP120	3VL9812-8TT01
		1200A	NGSP120	3VL9812-8TT01
	PG	1200A	NGSP120	3VL9812-8TT01
		1600A	NGSP160	3VL9816-8TT01

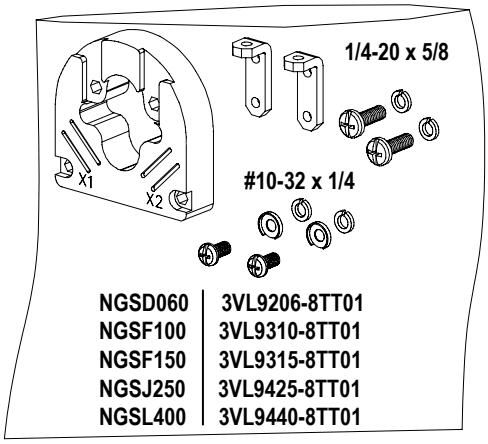

NGSD060	3VL9206-8TT01
NGSF100	3VL9310-8TT01
NGSF150	3VL9315-8TT01
NGSJ250	3VL9425-8TT01
NGSL400	3VL9440-8TT01

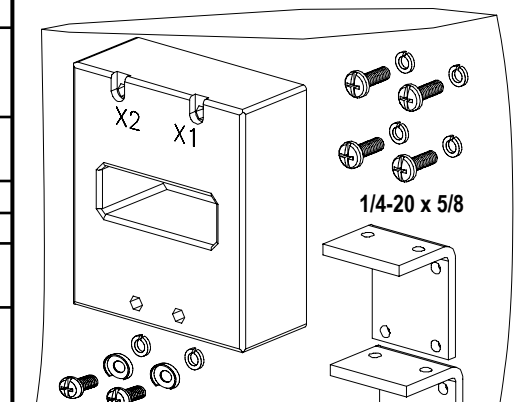

NGSM600	3VL9660-8TT01
NGSN800	3VL9780-8TT01
NGSP120	3VL9812-8TT01
NGSP160	3VL9816-8TT01

NGSD060	3VL9206-8TT01
NGSF100	3VL9310-8TT01
NGSF150	3VL9315-8TT01
NGSJ250	3VL9425-8TT01
NGSL400	3VL9440-8TT01

Option 1
[Opción]

1

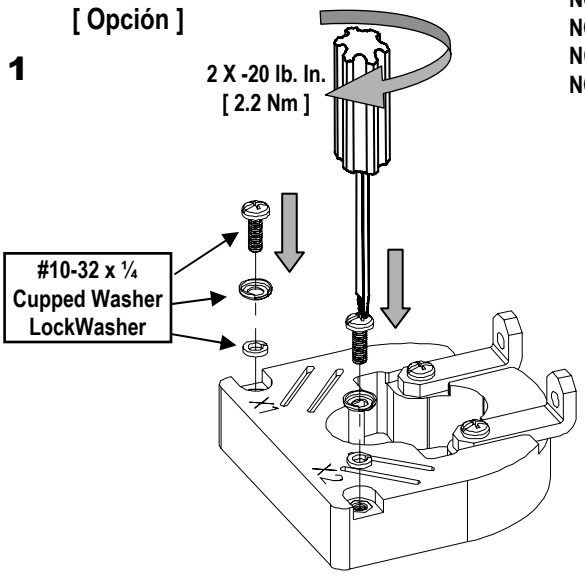

2a

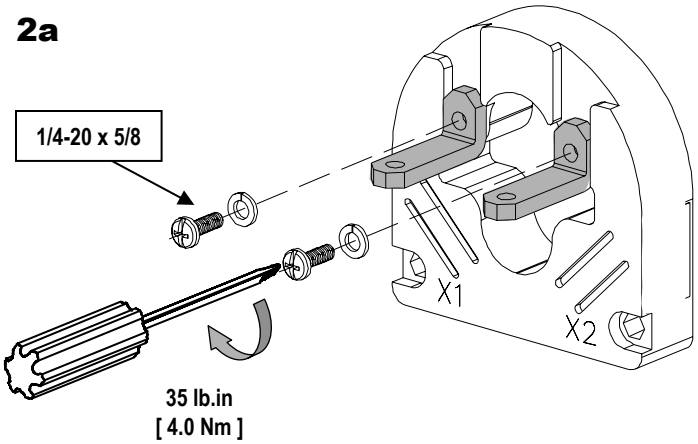

2b

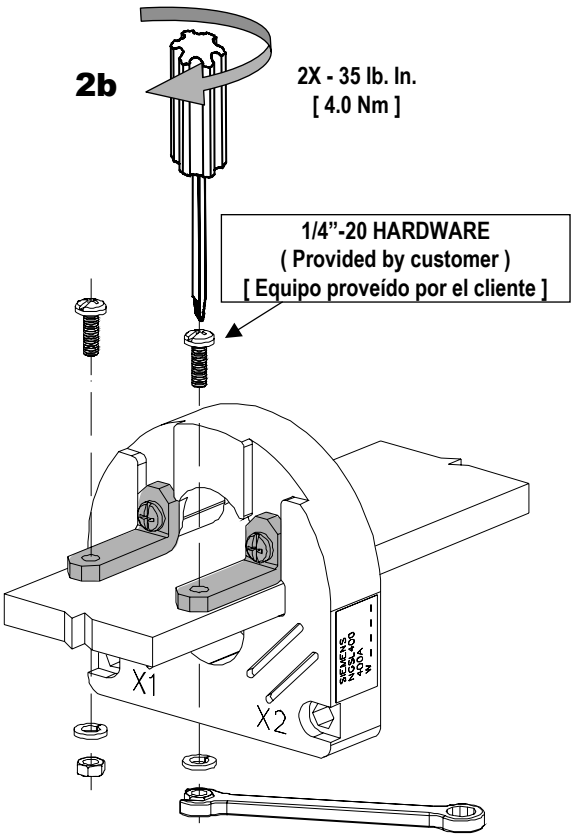

Option 2
[Opción]

3

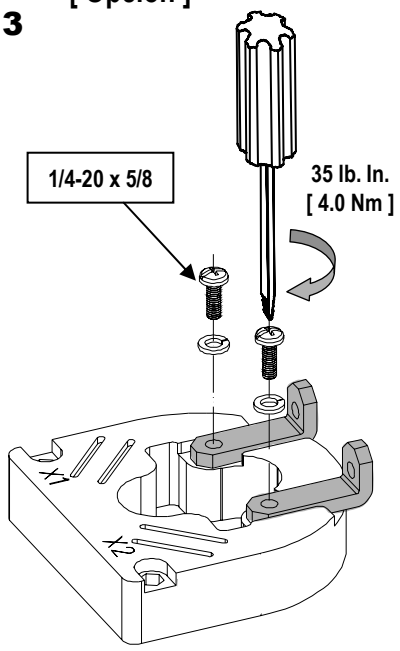

3a

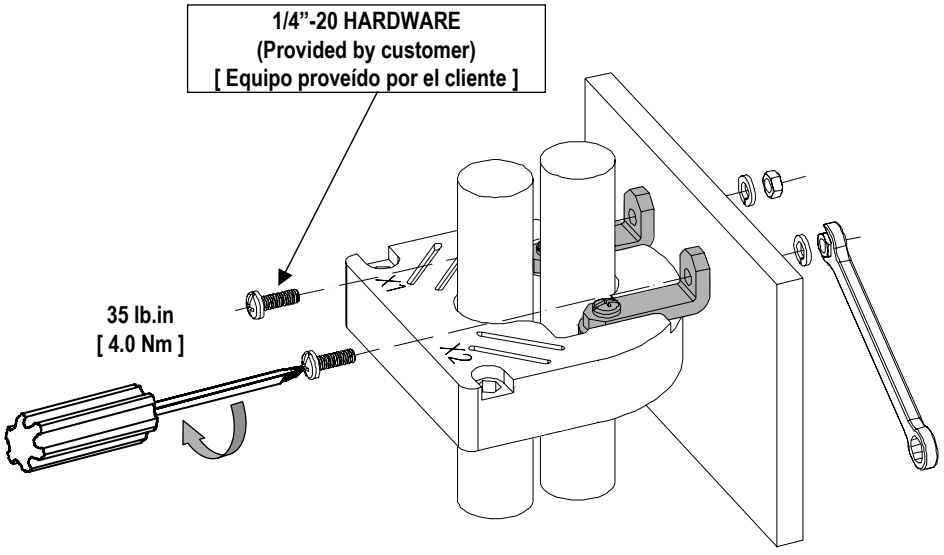

⚠ Danger	⚠ Peligro	⚠ Danger
Hazardous Voltage. **Will cause death or serious injury.** Turn off and lock out all power supplying this device before working on this device. Replace all covers before power supplying this device is turned on.	**Tensión peligrosa.** **Puede causar la muerte o lesiones graves.** Desenergice totalmente antes de instalar o darle servicio. Reemplace todas las barreras y cubiertas antes de energizar el interruptor.	**Tension dangereuse.** **Danger de mort ou risque de blessures graves.** Couper l'alimentation de l'appareil et barrer avant de travailler. Remplacez touts les couverts avant que l'approvisionnement de pouvoir soit alimenté.

1

NGSM600	3VL9660-8TT01
NGSN800	3VL9780-8TT01
NGSP120	3VL9812-8TT01
NGSP160	3VL9816-8TT01

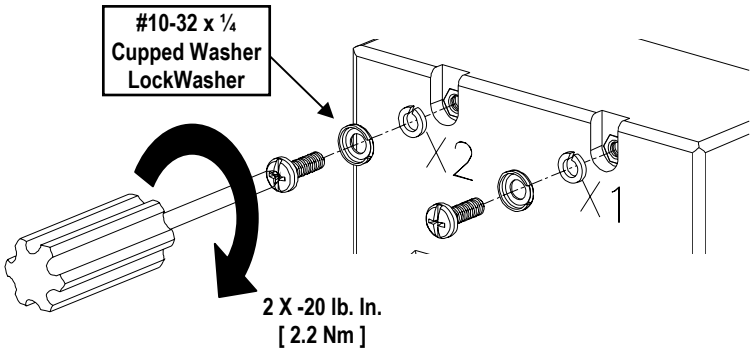

2

Option 1
[Opción]

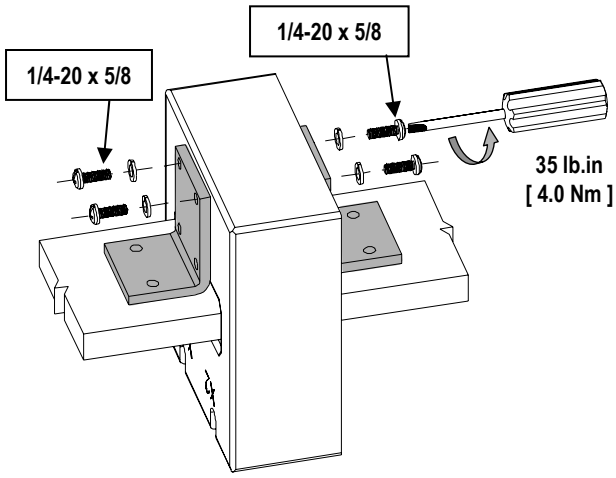

2a

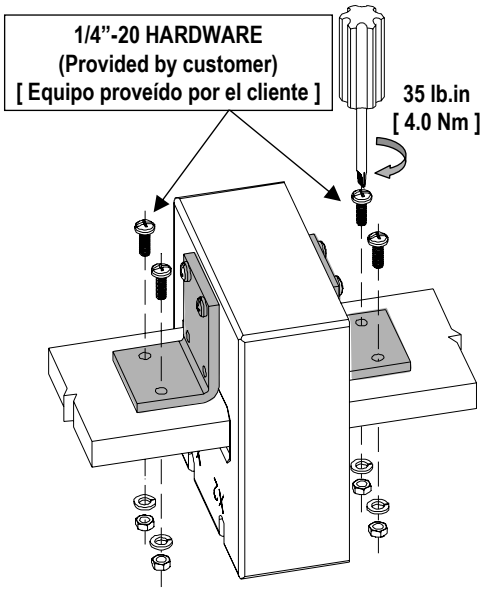

3

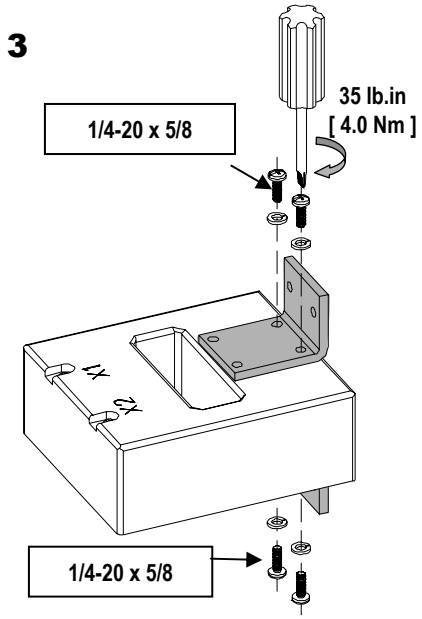

Option 2
[Opción]

3a

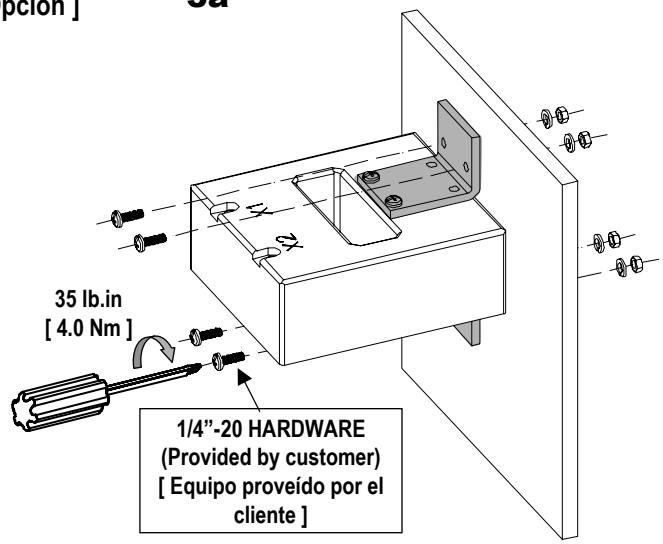

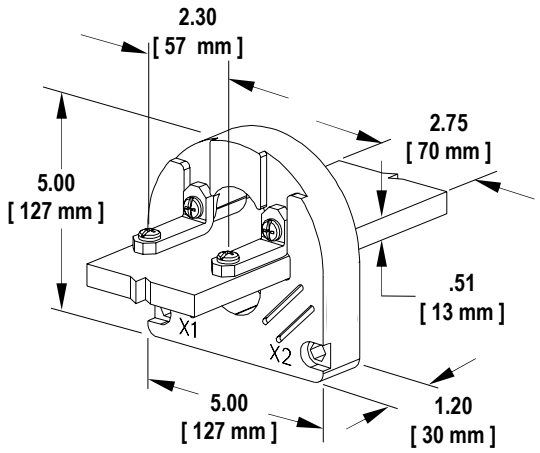

NGSD060	3VL9206-8TT01
NGSF100	3VL9310-8TT01
NGSF150	3VL9315-8TT01
NGSJ250	3VL9425-8TT01
NGSL400	3VL9440-8TT01

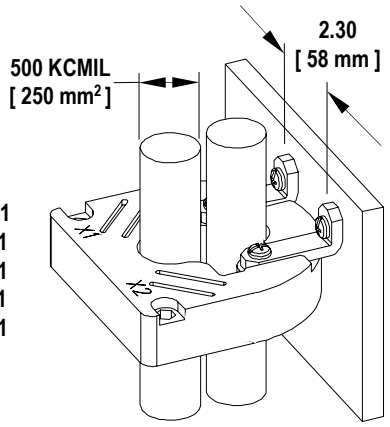

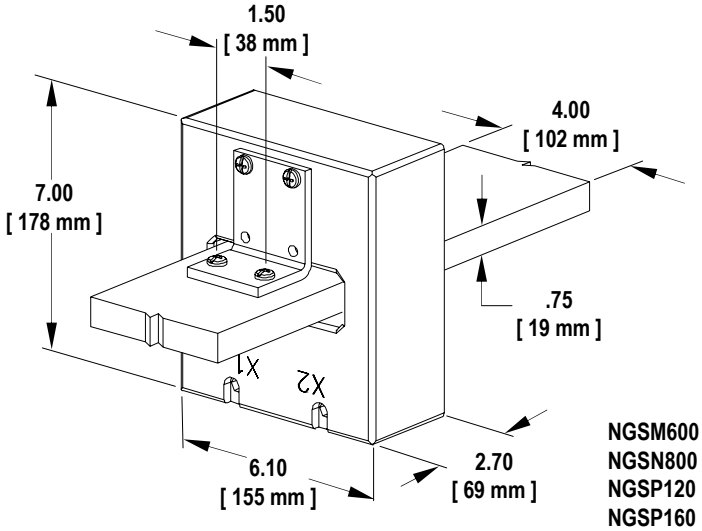

NGSM600	3VL9660-8TT01
NGSN800	3VL9780-8TT01
NGSP120	3VL9812-8TT01
NGSP160	3VL9816-8TT01

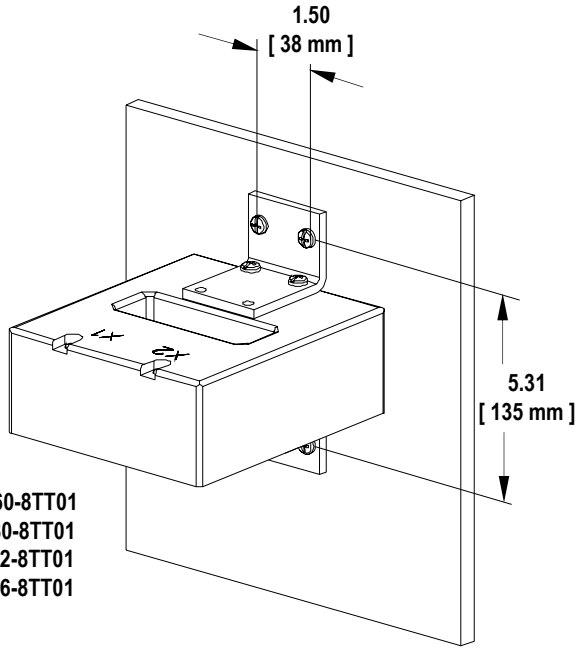

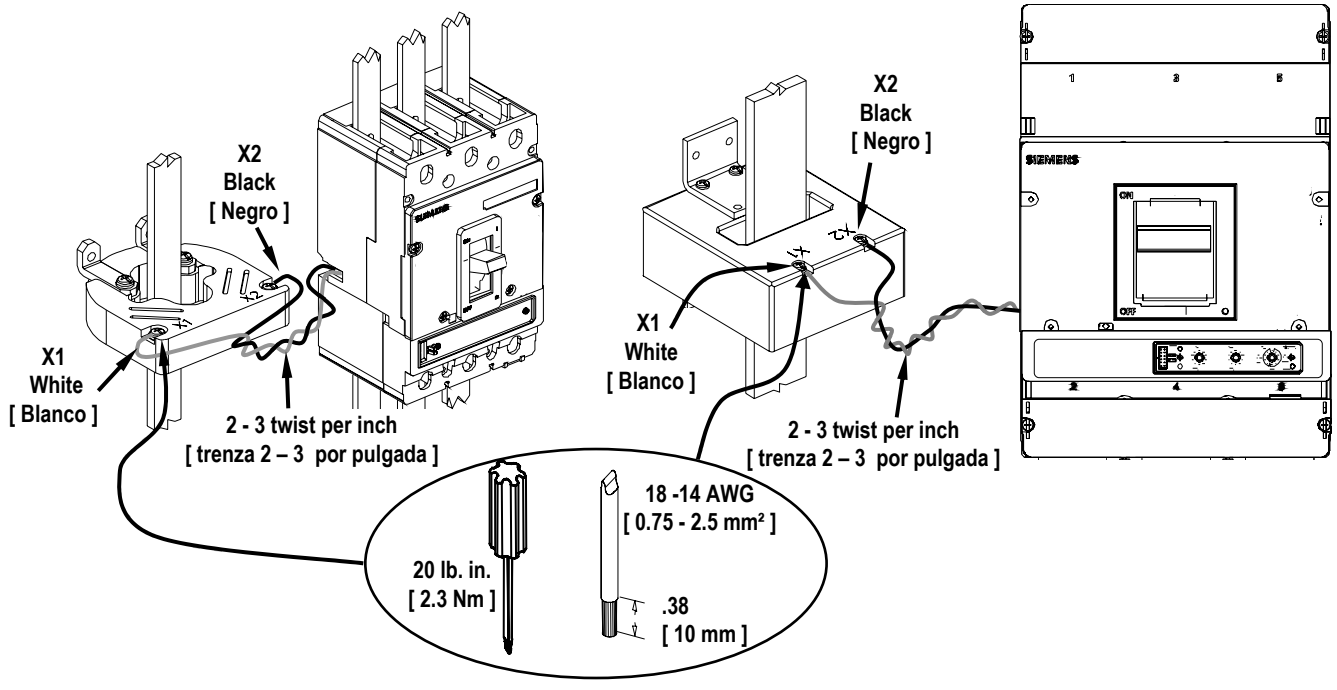

⚠ Danger	⚠ Peligro	⚠ Danger
Hazardous Voltage. **Will cause death or serious injury.** Turn off and lock out all power supplying this device before working on this device. Replace all covers before power supplying this device is turned on.	**Tensión peligrosa.** **Puede causar la muerte o lesiones graves.** Desenergice totalmente antes de instalar o darle servicio. Reemplace todas las barreras y cubiertas antes de energizar el interruptor.	**Tension dangereuse.** **Danger de mort ou risque de blessures graves.** Couper l'alimentation de l'appareil et barrer avant de travailler. Remplacez touts les couverts avant que l'approvisionnement de pouvoir soit alimenté.

4 Wire Ground Fault Residual Mode
[Método de falla a tierra- RESIDUAL]

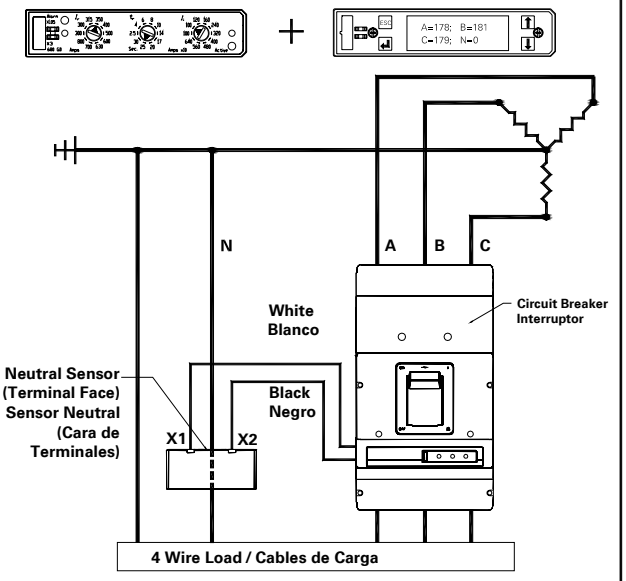

4 Wire Ground Fault Residual Mode / Reverse Connected
[Método de falla a tierra- RESIDUAL / Conexión al Revés]

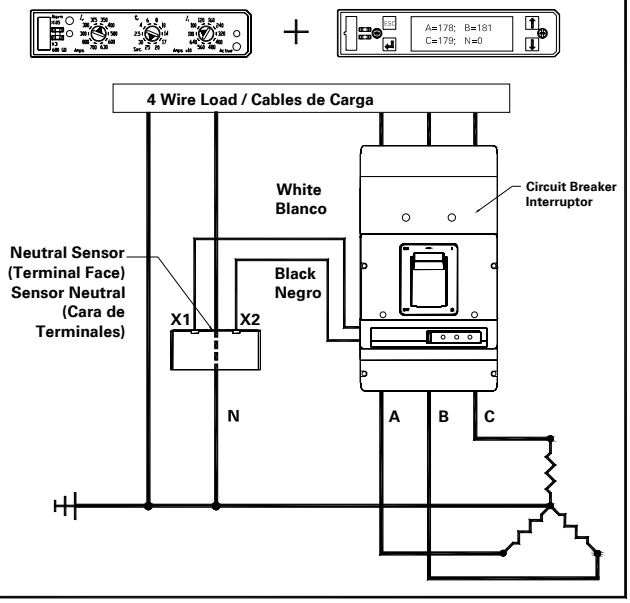

Ground Fault - Ground Return Mode
[Método de falla a tierra - Retorno a Tierra]

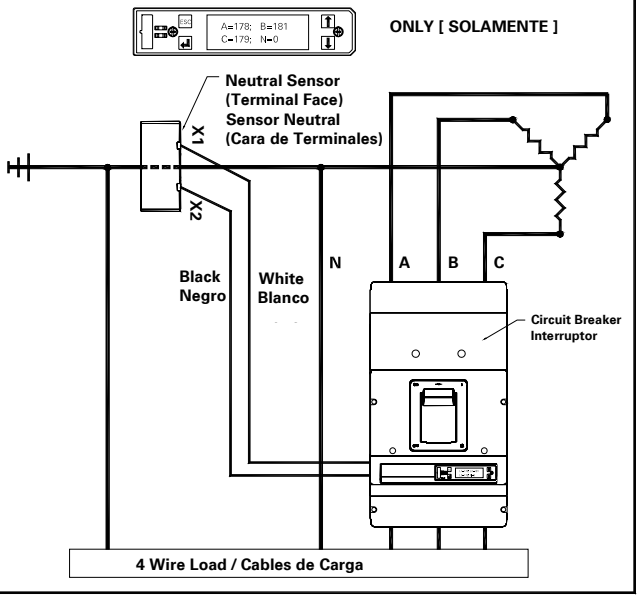

For Support in Europe refer to :

Bestell-Nr. / Order No.: 3ZX1012-0VL68-1AA1 Internet: www.siemens.de/lowvoltage/technical-assistance **GWA 4NEB 179 6820-10 DS 01**

Technical Support: Toll Free: 1-800-964-4114 Internet: www.sea.siemens.com

Subject to change without prior notice
Siemens Energy & Automation Inc. , Alpharetta, GA U.S.A.

© Siemens Energy & Automation Inc. 2006