SIEMENS

Data sheet 3VL7712-1AA46-0AA0

circuit breaker VL1250N w/o Electronic Trip Unit standard breaking capacity Icu=55kA/415V AC, 4-pole In=< 1250A, rated current without auxiliary release with screw terminal connections for switching unit and ETU

Model	
Type of the driving mechanism / motor drive	No

General technical data	
Number of poles	4
Size of the circuit-breaker	3VL7
Electrical endurance (switching cycles) / typical	1 500
Usage category	A

Subject to change without notice
© Copyright Siemens

Performance class for circuit breaker	N
Mechanical service life (switching cycles) / typical	3 000
Reference code / acc. to DIN 40719 extended according to IEC 204-2 / acc. to IEC 750	Q
Operating frequency / maximum	30 1/s

Voltage

Rated operational voltage Ue / max.	690 V
Insulation voltage	
• rated value	800 V
• at AC / rated value	800 V
Surge voltage resistance / rated value	8 kV
Operating voltage	
• rated value / maximum	690 V
• for main current circuit / at AC / at 50 Hz / maximum	690 V
• for main current circuit / at AC / at 60 Hz / maximum	690 V

Protection class

Protection class IP	IP20

Current

Operating current / at 45 °C / rated value	1 250 A
Continuous current / rated value	1 250 A
Derating temperature / for the rated value of the continuous current	50 °C
• acc. to UL 489	40 °C

Main circuit

Operating frequency	
• 1 / rated value	50 Hz
• 2 / rated value	60 Hz
Operating current	
• at 40 °C / rated value	1 250 A
• at 50 °C / rated value	1 250 A
• at 55 °C / rated value	1 162 A
• at 60 °C / rated value	1 162 A
• at 65 °C / rated value	1 075 A
• at 70 °C / rated value	1 075 A

Auxiliary circuit

Number of CO contacts / for auxiliary contacts	0
Number of NC contacts / for auxiliary contacts	0
Number of NO contacts / for auxiliary contacts	0

Product details

Subject to change without notice
© Copyright Siemens

Product component	
• Trip indicator	No
• Auxiliary switch	No
• Voltage trigger	No
• undervoltage release	No
• undervoltage release with leading contact	No
Product extension / optional / motor drive	Yes

Product function

Product function	
• of thermal overload trip unit	without
• Ground fault protection	No
• for neutral conductors / Short-circuit and overload proof	No
• Overload protection	No

Short circuit

Operational short-circuit current breaking capacity (Ics)	
• at 240 V / rated value	35 kA
• at 415 V / rated value	28 kA
• at 500 V / rated value	20 kA
• at 690 V / rated value	10 kA
Maximum short-circuit current breaking capacity (Icu)	
• at 240 V / rated value	65 kA
• at 415 V / rated value	55 kA
• at 440 V / rated value	35 kA
• at 480 V / acc. to NEMA / rated value	25 kA
• at 500 V / rated value	25 kA
• at 600 V / acc. to NEMA / rated value	20 kA
• at 690 V / rated value	20 kA

Connections

Arrangement of electrical connectors / for main current circuit	front side
Type of electrical connection / for main current circuit	screw-type terminals

Mechanical Design

Height	406.5 mm
Width	305 mm
Depth	333.5 mm
Mounting type	fixed mounting

Environmental conditions

Ambient temperature / during operation	

© Copyright Siemens

• minimum	-25 °C
• maximum	70 °C
Ambient temperature / during storage	
• minimum	-40 °C
• maximum	80 °C

Certificates

Certificate of suitability	IEC, standard switching capacity (N)
Reference code	
• acc. to DIN EN 61346-2	Q

General Product Approval			EMC	Test Certificates	Shipping Approval
CCC	Miscellaneous	TSE	C-Tick	Special Test Certificate	ABS

Shipping Approval				other	
BUREAU VERITAS	PRS	RINA	RMRS	Confirmation	Environmental Confirmations

other	
Miscellaneous	Manufacturer Declaration

Further information

Information- and Downloadcenter (Catalogs, Brochures,…)
http://www.siemens.com/lowvoltage/catalogs

Industry Mall (Online ordering system)
https://mall.industry.siemens.com/mall/en/en/Catalog/product?mlfb=3VL7712-1AA46-0AA0

Service&Support (Manuals, Certificates, Characteristics, FAQs,...)
https://support.industry.siemens.com/cs/ww/en/ps/3VL7712-1AA46-0AA0

Image database (product images, 2D dimension drawings, 3D models, device circuit diagrams, ...)
http://www.automation.siemens.com/bilddb/cax_en.aspx?mlfb=3VL7712-1AA46-0AA0

CAx-Online-Generator
http://www.siemens.com/cax

Tender specifications
http://www.siemens.com/specifications

Subject to change without notice
© Copyright Siemens

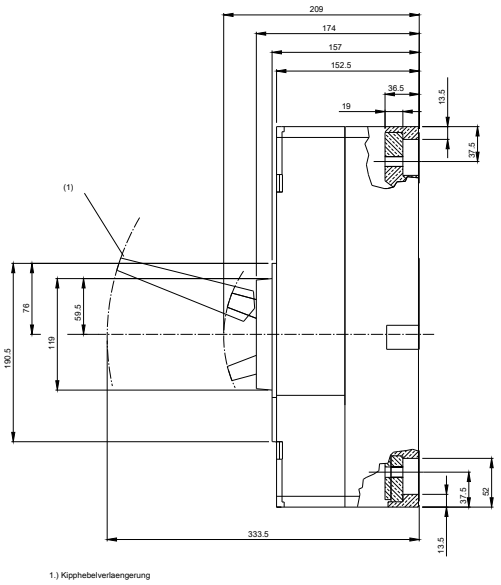

1.) Kipphebelverlaengerung

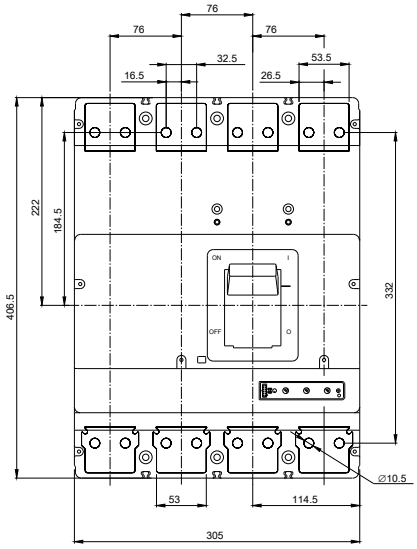

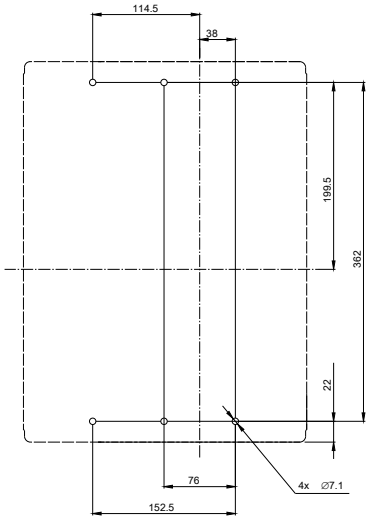

Montagehinweis

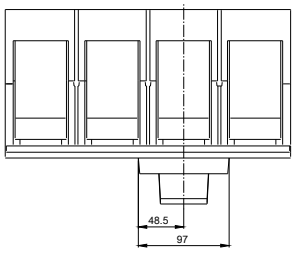

© Copyright Siemens