SIEMENS

I-T-E® Molded Case Circuit Breakers

Sensitrip®
PD-Frame
Information and
Instruction Guide

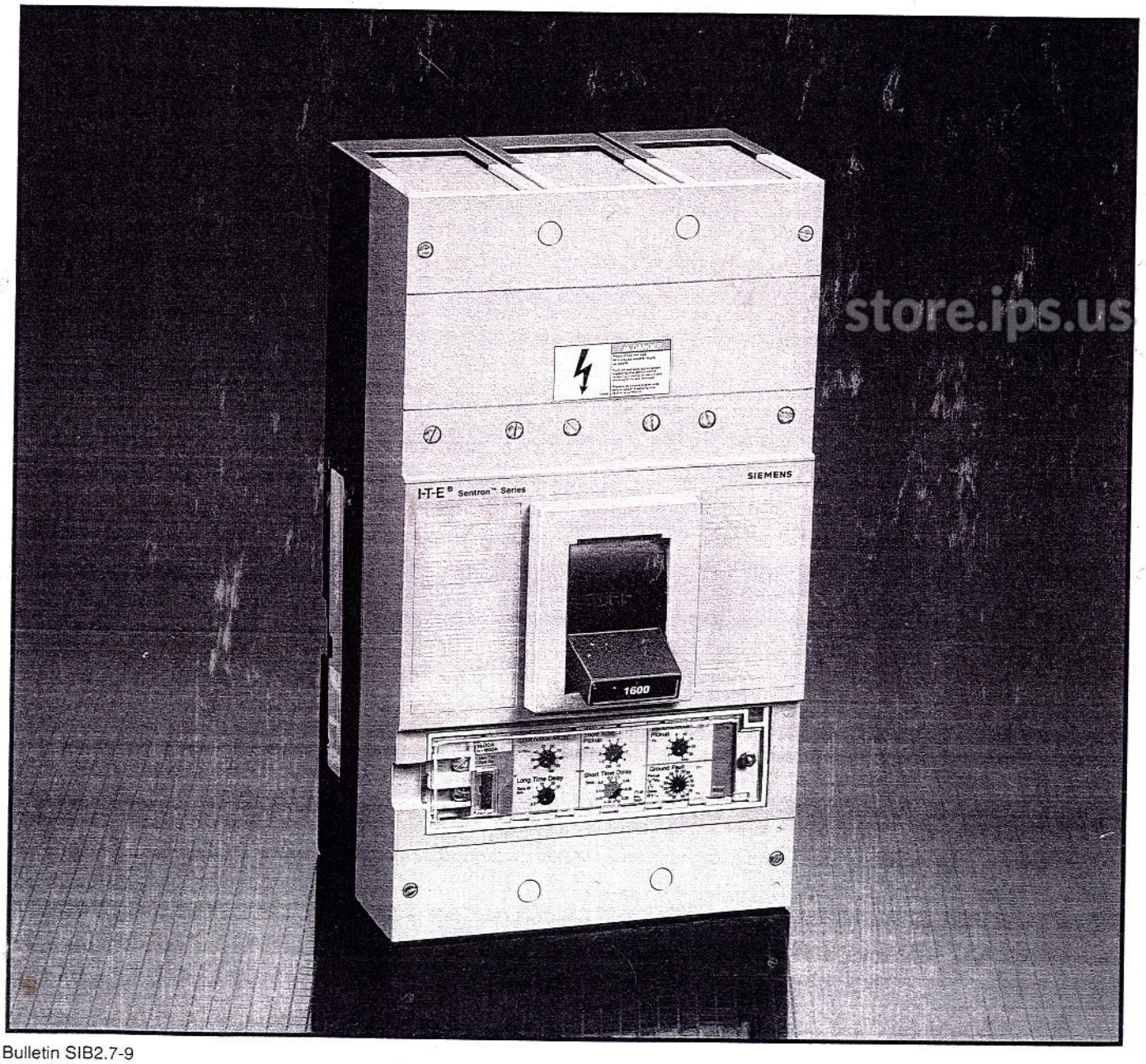

store.ips.us

Bulletin SIB2.7-9

Courtesy of store.ips.us

⚠ DANGER

Hazardous voltages are present inside the enclosures or panels in which the circuit breakers are installed. Serious injury, electrocution, and/or equipment damage will result if circuit breakers are improperly applied or precaution is not used.

De-energize all incoming power prior to installation of circuit breakers or associated accessories.

Only qualified personnel should work on or around this equipment.

Position of circuit breaker handles shown in this booklet is for illustration purposes only. Circuit breakers are to be installed in OFF or TRIPPED position only.

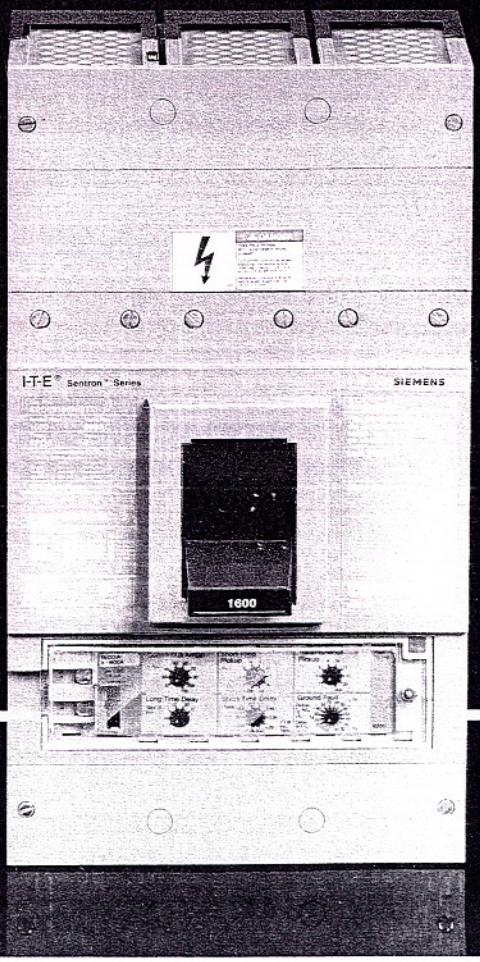

store.ips.us

Courtesy of store.ips.us

I-T-E PD-Frame Circuit Breakers 3-Pole, 1200-1600 Amperes

Types SPD6, SHPD6

Table of Contents

Important Notices 2

General Information 3

Dimensional Reference Drawings 4

Connect-All Mounting Assembly 5-8

Handle Blocking Device **(See Bulletin SIB2.7-5)**

Padlocking Device **(See Bulletin SIB2.7-5)**

Pressure Wire Connectors 9,10

Trip Unit Adjustments 11-14

Time Current Curves 15-19

Mechanical Interlock 20-23

Accessories:

Shunt Trip, Undervoltage Trip, Auxiliary Switch and Bell Alarm Switch Installation **(See Bulletin SIB2.7-5)**

Shunt Trip, Undervoltage Trip, Auxiliary Switch and Bell Alarm Switch Electrical and Mechanical Check **(See Bulletin SIB2.7-5)**

Rotary Handle Operator **(See Bulletin SIB2.7-5)**

Accessories (Cont'd):

Max Flex™ Flange Mount Handle Operator **(See Bulletin SIB2.7-5)**

TELEMAND® Electric Motor Operator **(See Bulletin SIB2.7-5)**

Enclosure **(See Bulletin SIB2.7-5)**

Neutral Assembly **(See Bulletin SIB2.7-5)**

Door Latch Mechanism **(See Bulletin SIB2.7-5)**

Neutral Transforming Sensor 24,25

Universal Test Kit 26,27

Ordering Information:

Circuit Breaker Catalog Numbers 28

Internal Accessory Catalog Numbers **(See Bulletin SIB2.7-5)**

Additional Accessory Catalog Numbers 29

Miscellaneous:

UL Listings and File Numbers 29

Industry Specifications 29

store.ips.us

Courtesy of store.ips.us

IMPORTANT

The information contained herein is general in nature and is not intended for specific application purposes nor is it intended as a training manual for unqualified personnel. Refer to Note for definition of a **qualified person.*** It does not relieve the user of responsibility to use sound practices in application, installation, operation and maintenance of the equipment purchased or in personnel safety precautions. Should a conflict arise between the general information contained in this publication and the contents of drawings or supplementary material or both, the latter shall take precedence. Siemens Energy & Automation, Inc. reserves the right to make changes in specifications shown herein or add improvements at any time without notice or obligation.

NOTE

***Authorized and qualified personnel—**
For the purpose of this manual a qualified person is one who is familiar with the installation, construction or operation of the equipment and the hazards involved. In addition, he has the following qualifications:

(a) **is trained and authorized** to de-energize, clear, ground, and tag circuits and equipment in accordance with established safety practices.

(b) **is trained** in the proper care and use of protective equipment such as rubber gloves, hard hat, safety glasses or face shields, flash clothing, etc., in accordance with established safety practices.

(c) **is trained** in rendering first aid.

store.ips.us

SUMMARY

These instructions do not purport to cover all details or variations in equipment, nor to provide for every possible contingency to be met in connection with installation, operation, or maintenance. Should further information be desired or should particular problems arise which are not covered sufficiently for the purchaser's purposes, the matter should be referred to the local sales office, listed on back of this instruction guide.

The contents of this instruction manual shall not become part of or modify any prior or existing agreement, commitment or relationship. The sales contract contains the entire obligation of Siemens Energy & Automation, Inc. The warranty contained in the contract between the parties is the sole warranty of Siemens Energy & Automation, Inc. Any statements contained herein do not create new warranties or modify the existing warranty.



⚠ DANGER

Hazardous voltages are present in the equipment which will cause severe personal injury and product failure. Always de-energize and ground the equipment before maintenance. Maintenance should be performed only by qualified personnel. The use of unauthorized parts in the repair of the equipment or tampering by unqualified personnel will result in dangerous conditions which can cause severe personal injury or equipment damage. Follow all safety instructions contained herein.

Courtesy of store.ips.us

Information and Instructions

General Information

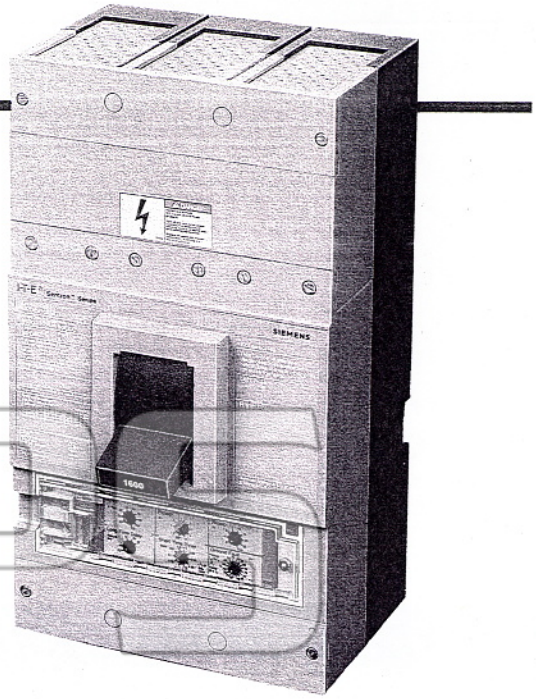

General

PD-Frame Solid State Sensitrip style breakers of the Sentron family are for use in individual enclosures, switchboards, and power distribution panel boards. They are available as 80% rated devices and in two interruption ranges as shown in the table below.

Symmetrical RMS Amperes UL Interruption Ratings				
Interruption Rating	**Type**	**240V AC**	**480V AC**	**600V AC**
Standard	SPD6	65kA	50kA	25kA
High Rating	SHPD6	100kA	65kA	50kA

Pressure wire connectors, suitable for use with aluminum or copper are available for all PD-Frame circuit breakers. A connect-all mounting block assembly is necessary to properly put all PD-Frame circuit breakers into service. The latter mounting arrangement permits the removal of the circuit breaker from service without having to disconnect terminal connectors or cables. UL listed special features such as a shunt trip, auxiliary or alarm switches and undervoltage trip devices are available for field installation. The installation and removal of these devices is to be accomplished by properly authorized and qualified personnel only. Information concerning these accessories can be found in the PD and RD-Frame Information and Instruction Guide (Bulletin SIB2.7-5)

The chart below illustrates the functions available in all Sentron Solid State Sensitrip circuit breakers.

Adjustments		Breaker Suffix Letters			
		No Suffix	**G**	**NT**	**NGT**
Long Time	Adj. Current Setting	√	√	√	√
Long Time	Adj. Long Time Delay	√	√	√	√
	Adj. Instantaneous Setting	√	√	√	√
Short Time	Adj. Short Time Pick Up			√	√
Short Time	Adj. Short Time Delay			√	√
Short Time	Adj. Short Time I^2t Pick Up			√	√
Ground Fault	Adj. Ground Fault Pick Up		√		√
Ground Fault	Adj. Ground Fault Delay		√		√

NOTES: "G" suffix in catalog number denotes circuit breaker for 3 phase, 3 wire systems. For 3 phase, 4 wire, order correct 4th wire (neutral) transformer as separate and additional item.

Circuit Breaker Operation

With the mechanism latched and the contacts open, the operating handle will be in the OFF position. Moving the handle to the ON position closes the contacts and establishes a circuit through the circuit breaker. Under overload or short circuit conditions sufficient to trip or open the breaker automatically, the operating handle moves to a position between ON and OFF. To relatch the circuit breaker after automatic operation, move the operating handle to the extreme OFF position. The circuit breaker is now ready for reclosing.

The overcenter toggle mechanism is trip free of the operating handle. The circuit breaker therefore, cannot be held closed by means of the handle should a tripping condition exist. After automatic operation, the handle will assume an intermediate position between ON and OFF, thus displaying a clear indication of tripping.

Maintenance

Experience has shown that properly applied molded case circuit breakers normally do not require maintenance. However some industrial users may choose to establish an inspection and maintenance procedure to be carried out on a regular basis. For detailed information, consult applicable NEMA publications or your local Siemens sales office.

Courtesy of store.ips.us

I-T-E PD-Frame Outline Drawings[1]

3-Pole

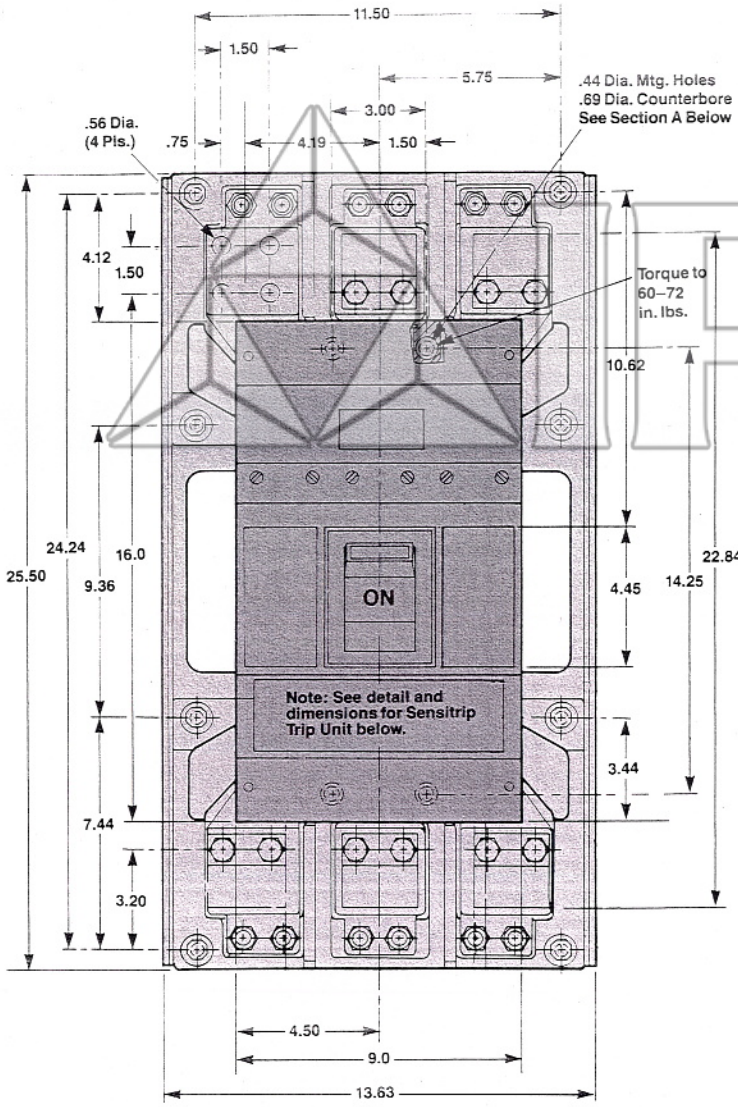

Front View

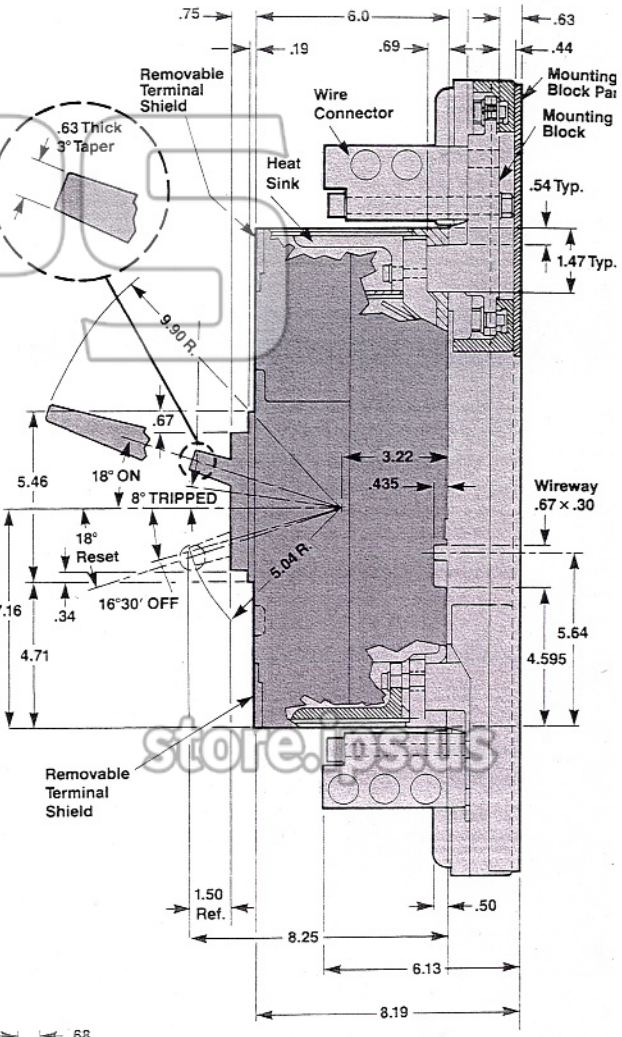

Side View

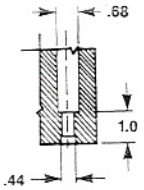

Section A

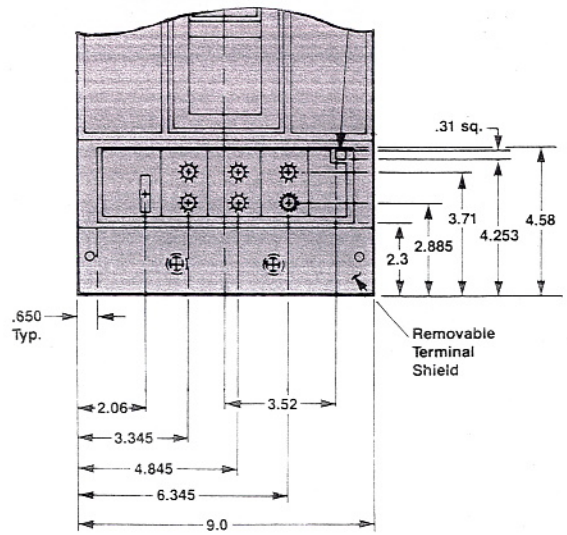

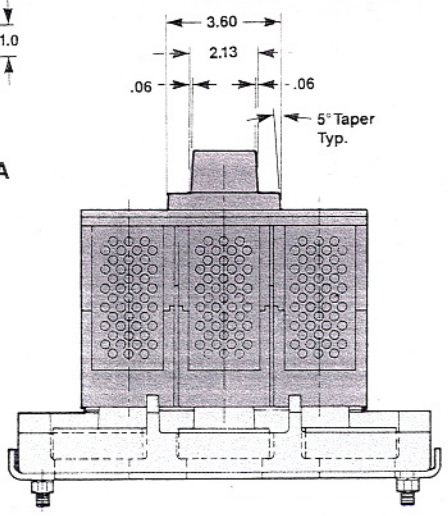

End View

Courtesy of store.ips.us

I-T-E Connect-All Mounting Block (MB9301, MBR9302)

⚠ DANGER

Hazardous Voltage. Will cause severe injury or death.

Turn power off supplying device before installing.

⚠ SAFETY INSTRUCTIONS

NOTE: These instructions outline the recommended installation procedure.

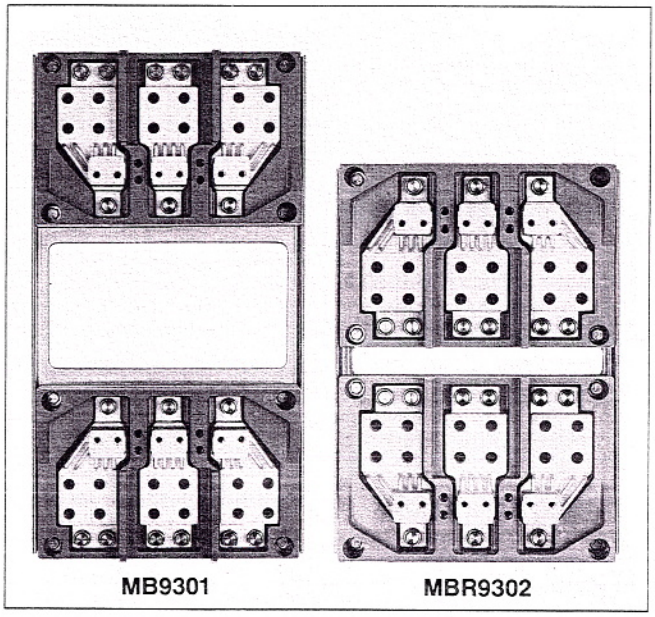

Mounting of Connect-All Mounting Block Assembly

A. Provide suitable mounting supports (**1**) and drill holes as shown in Figure 1. (Recommended use of 1⅜ x ⅞ x 3/16 steel angle.)

B. Provide cutout for breaker escutcheon in front plate (**2**).

NOTE: Refer to Figure 2 for catalog number MB9301, and Figure 4 for catalog number MBR9302.

C. Remove four ⅜ x 1½ hex head bolts (**3**), nuts and washers (Figures 2 and 4) and re-use to mount assembly to support angles. Tighten mounting bolts and nuts securely.

Installation

The PD-frame devices are for use in individual enclosures, panelboards, switchboards, or other approved equipment.

The installation procedure consists of inspecting, attaching required accessories, mounting the device and connecting and torquing the line and load wire connectors.

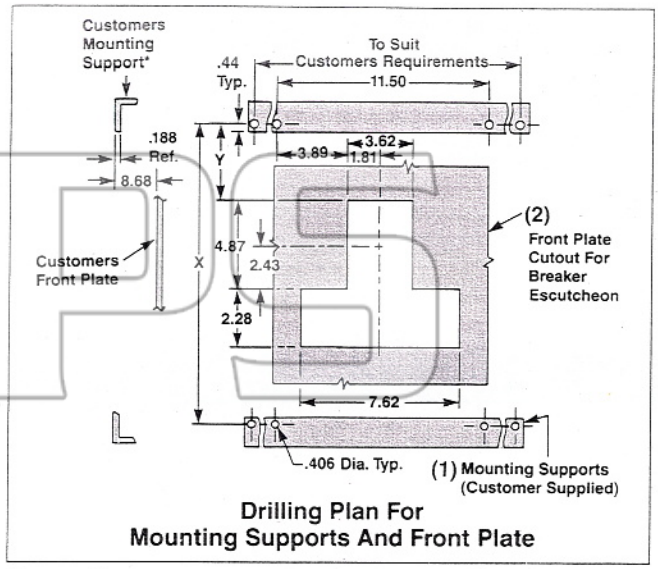

Figure 1

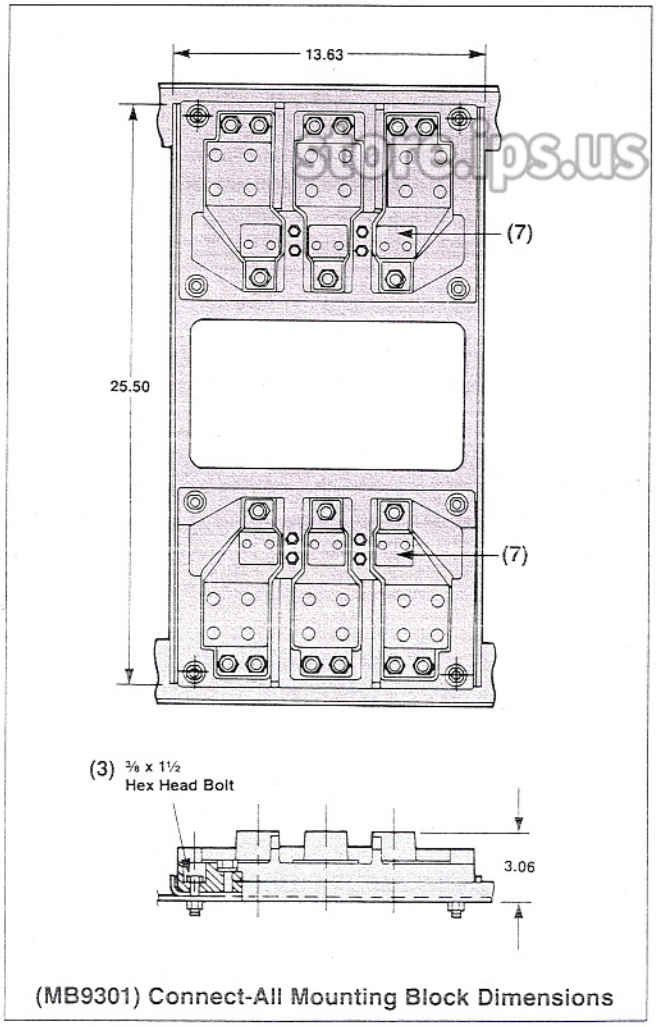

Figure 2

Courtesy of store.ips.us

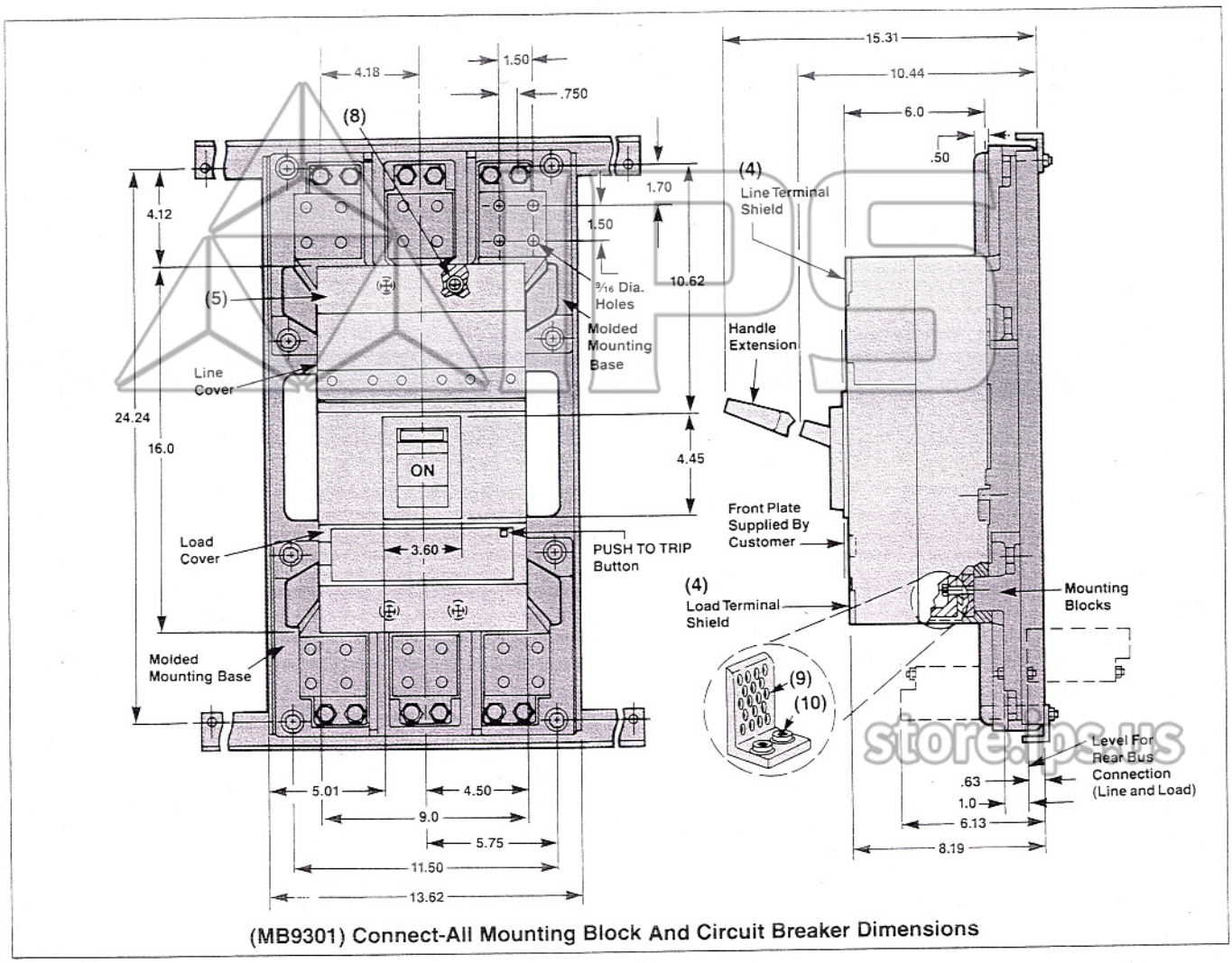

(MB9301) Connect-All Mounting Block And Circuit Breaker Dimensions

Figure 3

Unmounted wire connectors (where required) are available as separate catalog items. See Figure 6 for options on installation.

NOTE: Use TA5P600, TA4P750, TC5R600 or TA6R600 for the PD frame. See breaker marking.

NOTE: Molded case switches are supplied as complete devices only.

Circuit Breaker Preparation

A. Before mounting breaker onto connect-all mounting block assembly, turn off and lock out all power to prevent incidental or accidental electrical contact during the installation.

B. Make sure that the device is suitable for the installation by comparing nameplate ratings with system requirements. Inspect the breaker for completeness and check for any damage before mounting.

NOTE: Trip unit and accessory installation should be complete before the circuit breaker is mounted and connected. (See installation instructions for trip unit and accessories, in this manual, before proceeding.

C. Make sure the device is in the tripped or off position. For circuit breakers, depress the red trip button (see Figures 3 and 5) or turn breaker off.

NOTE: Molded case switches do not have a PUSH TO TRIP button.

Circuit Breaker Manual Operation

Manual operation of the circuit breaker is controlled by the circuit breaker handle and the Push-To-Trip button. The circuit breaker handle has three indicating positions, two of which are molded into the handle to indicate ON and OFF. The third position indicates a TRIP position and is between ON and OFF positions.

A. Circuit Breaker Reset
After tripping, the circuit breaker is reset by moving the circuit breaker handle to the reset position and then moving the handle to the ON position.

NOTE: In the event of a thermal trip, the circuit breaker cannot be reset until the thermal element cools.

Courtesy of store.ips.us

B. Push-To-Trip Button
The Push-To-Trip button checks the tripping function and is used to manually exercise the operating mechanism.

Mounting of Breaker Onto Connect-All Assembly

A. Remove the load and line terminal shields (**4**) by loosening the two terminal shield screws (**5**). Also remove end plates (**6**). See Figures 3 and 5.

B. Place breaker onto protruding connect-all assembly terminals (**7**), see Figures 2 and 4, and fasten breaker to molded mounting base with four slotted fillister head ⅜-16 x 1¾ long screws, washers and lockwashers (**8**), see Figures 3 and 5. Tighten mounting screws to a torque of 5 to 6 ft. lbs.

C. Mount heatsink (9) with two hex head ⅜-16 x 1¾ long copper alloy bolts, washers and lock washers (**10**) per terminal. Tighten these bolts to a torque of 9 to 10 ft. lbs.

D. Replace all end plates (**6**), and line and load terminal shields (**4**). Tighten terminal shield screws securely.

E. After mounting the device, line and load terminals and accessory terminals should be connected.

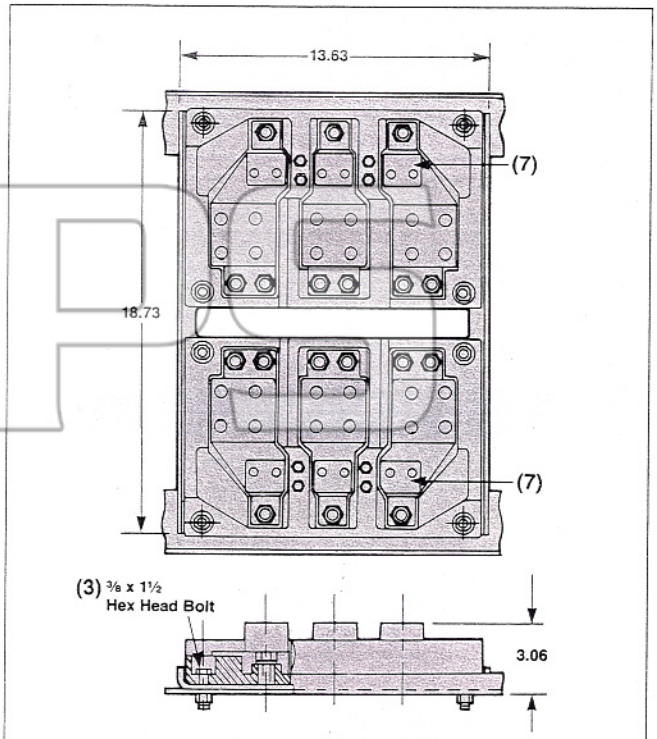

(MBR9302) Connect-All Mounting Block Dimensions

Figure 4

store.ips.us

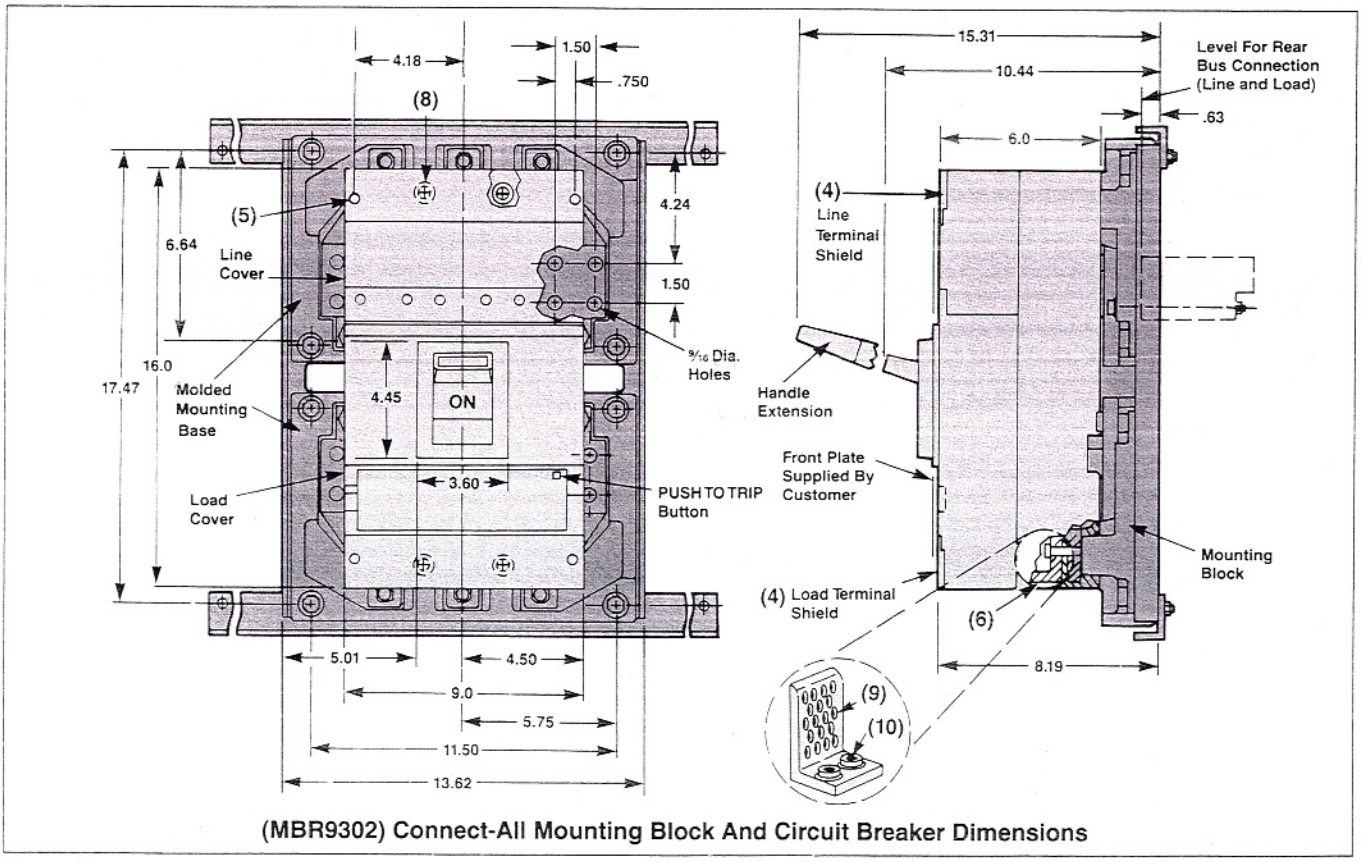

(MBR9302) Connect-All Mounting Block And Circuit Breaker Dimensions

Figure 5

Courtesy of store.ips.us

Maintenance

Experience has shown that properly applied molded case circuit breakers normally do not require maintenance. However, some industrial users may choose to establish an inspection and maintenance procedure to be carried out on a regular basis. For detailed information, consult applicable NEMA publications or your local Siemens sales office.

NOTE: Do not spray or allow any petroleum based chemicals, solvents, or paints to contact the molded parts or nameplates.

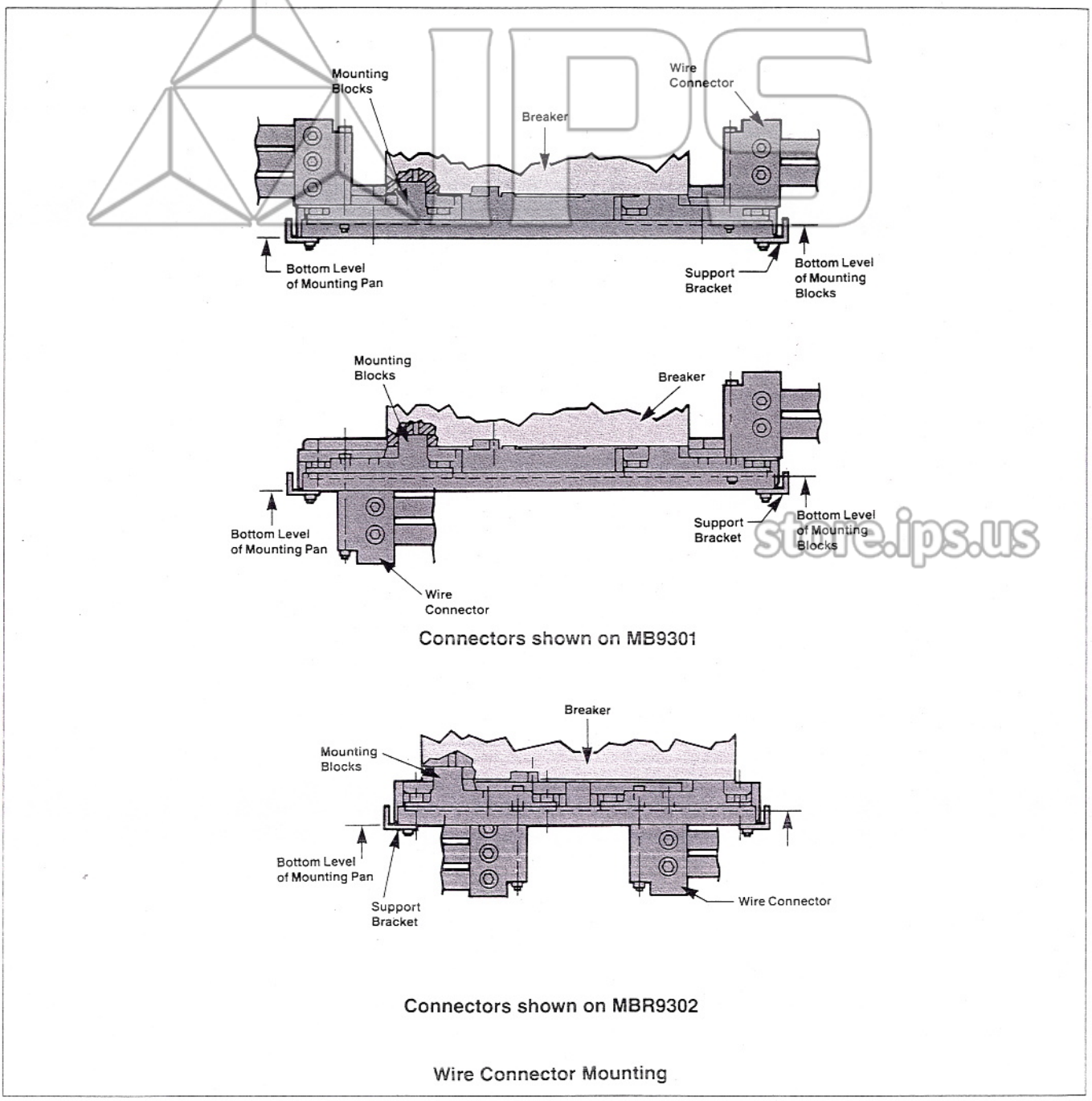

Figure 6

Courtesy of store.ips.us

⚠ DANGER

Hazardous Voltage. Will cause severe injury or death.

Turn power off supplying device before installing.

⚠ SAFETY INSTRUCTIONS

General

NOTE: These instructions outline the recommended installation procedures for TA5P600, TC5R600, TA4P750 and TA6R600.

A. Turn off and lock out all power supplying this device before installing wire connectors.

B. Move breaker handle to OFF position, or depress the PUSH TO TRIP button. The breaker must be in the OFF or TRIPPED position before continuing.

NOTE: Steps C and D may be completed in any convenient order.

Table 1 – Pressure Wire Connector Torque Values

Catalog Number	Wire Range	Torque Mounting Bolts	Torque Cable Set Screw
TA5P600	(1-5) 300-400 Kcmil Cu/Al	300 in. lbs.	600 in. lbs.
	(1-5) 500-600 Kcmil Cu/Al	300 in. lbs.	780 in. lbs.
TA4P750	(1-4) 600-750 Kcmil Cu/Al	300 in. lbs.	480 in. lbs.
TC5R600	(1-5) 300-600 Kcmil Cu	375 in. lbs.	600 in. lbs.
TA6R600	(1-6) 300-600 Kcmil Cu/Al	375 in. lbs.	600 in. lbs.

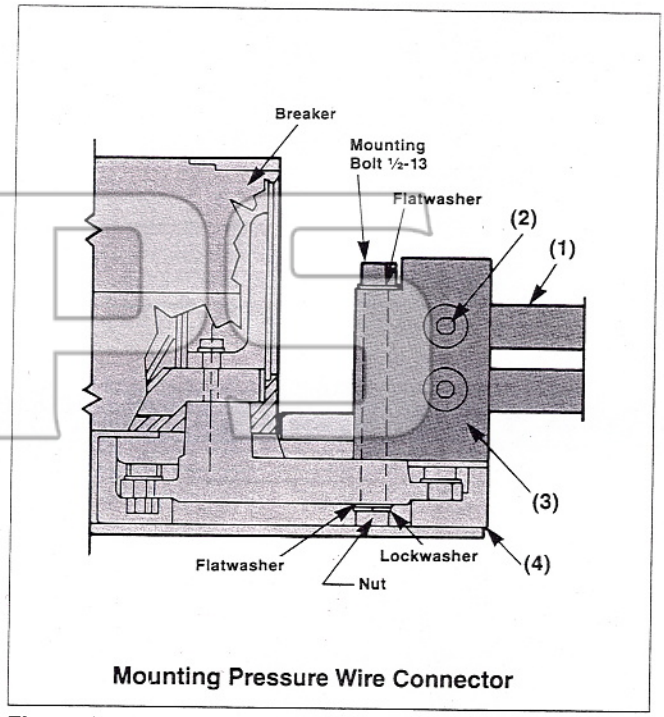

Mounting Pressure Wire Connector

Figure 1

C. Attach power cables (**1**) to wire connectors (**3**) and tighten the cable set screws (**2**) as shown in Figure 1. Use Table 1 for the torque value of the cable set screws.

D. Mount pressure wire connectors (**3**) to connect-all mounting block assembly (**4**), either front or rear position, with 6″ × ½-13 hex head mounting bolts, associated nuts, flatwashers and lockwashers provided (Figure 1). Tighten to a torque value indicated in Table 1.

NOTE: Alternate lug connection options may be found in Bulletin SIB2.7-5, page 9.

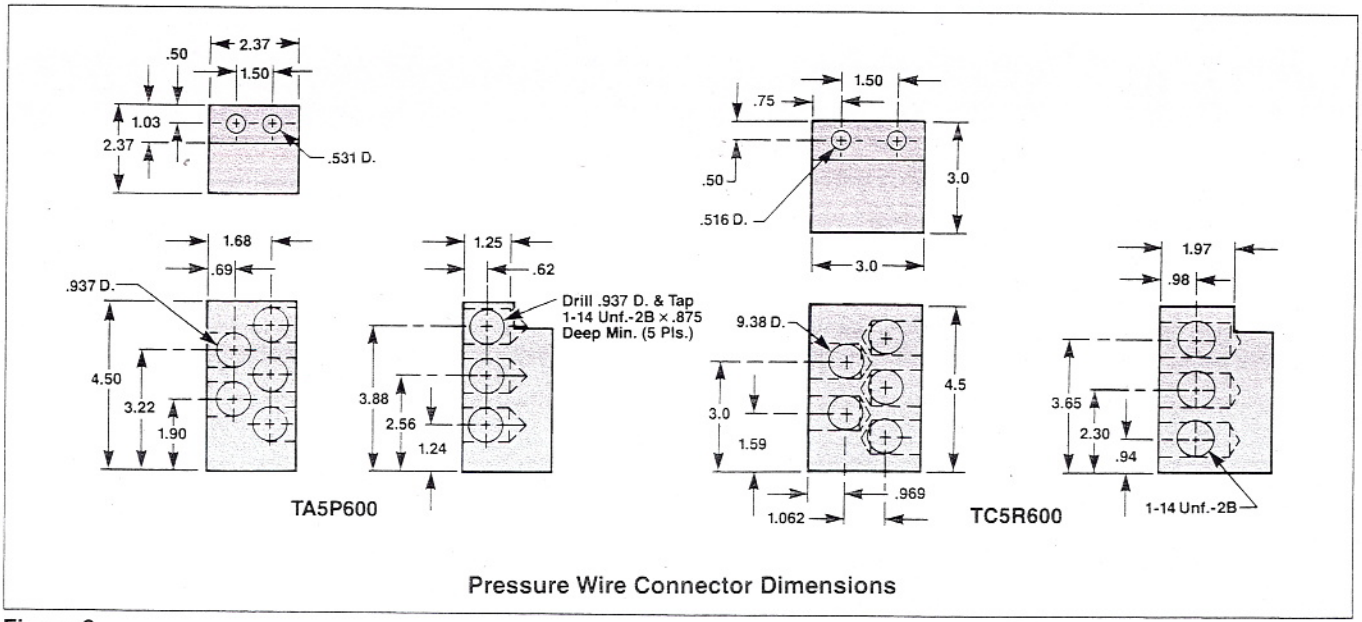

Pressure Wire Connector Dimensions

Figure 2

Courtesy of store.ips.us

I-T-E Pressure Wire Connectors

Table 1 – Connector Selection Chart

Connector Catalog Numbers	Circuit Breaker Ampere Rating	Connector Wire Range	Set Screw Torque	For Use With Type(s)
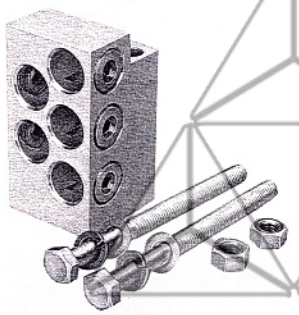 TA5P600	1200-1600	(1-5 Pcs.) 300-400 Kcmil (Cu/Al) (1-5 Pcs.) 500-600 Kcmil (Cu/Al)	600 in. lb. 780 in. lb.	PD6, PXD6, SPD6, HPD6, HPXD6, SHPD6, CPD6
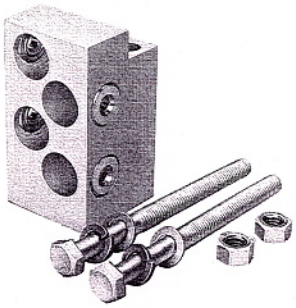 TA4P750	1200-1600	(1-4 Pcs.) 600-750 Kcmil (Cu/Al)	480 in. lb.	PD6, PXD6, SPD6 HPD6, HPXD6, SHPD6, CPD6
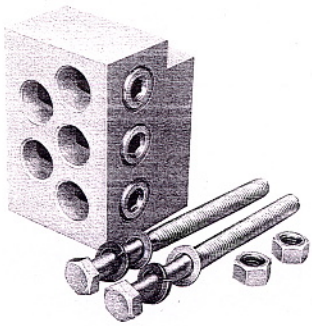 TC5R600	1200-2000	(1-5 Pcs.) 300-600 Kcmil (Cu Only)	600 in. lb.	PD6, PXD6, SPD6, HPD6, HPXD6, SHPD6, RD6, RXD6, HRD6, HRXD6, CPD6
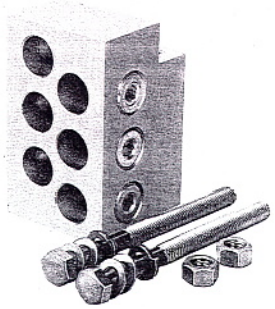 TA6R600	1200-2000	(1-6 Pcs.) 300-600 Kcmil (Cu/Al)	600 in. lb.	PD6, PXD6, SPD6, HPD6, HPXD6, SHPD6, RD6, RXD6, HRD6, HRXD6, CPD6

store.ips.us

Courtesy of store.ips.us

PD-Frame Trip Adjustments

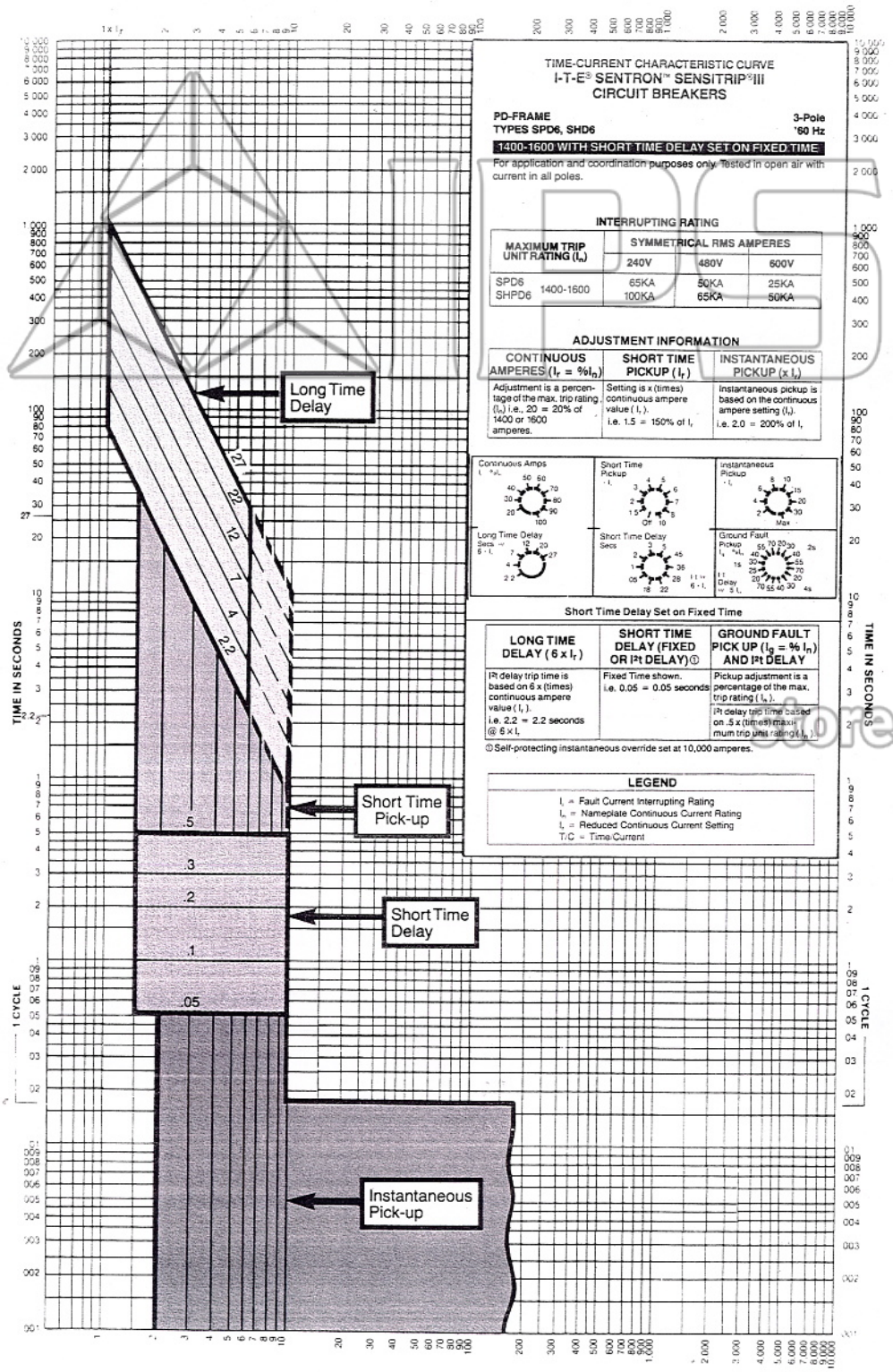

Curve for illustration purposes only

I-T-E® SENTRON™ SENSITRIP® III CIRCUIT BREAKERS

Siemens Energy & Automation, Inc.
Alpharetta, Georgia 30201

store.ips.us

Courtesy of store.ips.us

PD-Frame Trip Adjustments

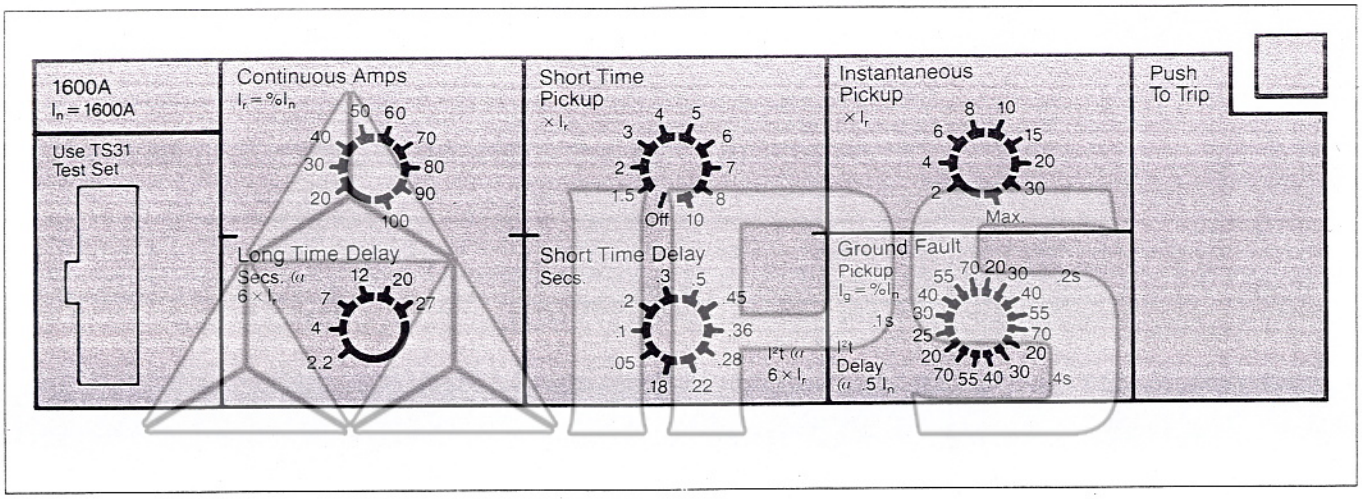

Figure 1

I_n = Maximum circuit breaker ampere rating.
I_r = Current Rating—a function of continuous ampere adjustment setting expressed in % of I_n.

I_g = Ground Fault Pickup—a function of adjustment setting expressed in % of I_n.

Adjustable Continuous Amps Switch

I_r = %I_n

All SPD6, SHPD6 solid state molded case circuit breakers have an adjustable continuous amps rating switch. Adjustments made to this switch can change the continuous amps rating of the breaker to 20, 30, 40, 50, 70, 80, 90 or 100% of the maximum continuous amps rating (I_n) of the circuit breaker. See Figure 1 for the possible settings for this switch.

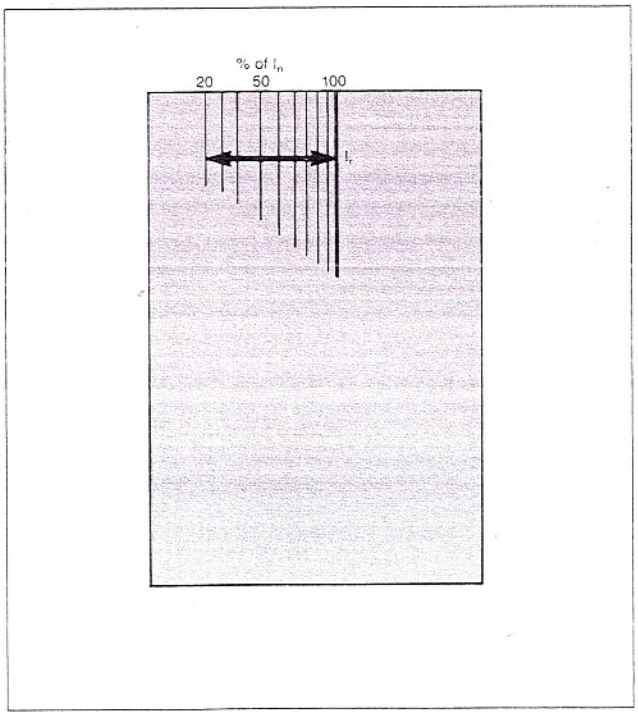

Adjustable Long Time Delay

Seconds @ 6 × I_r

SPD6, SHPD6 models with an adjustable long time delay switch allow for selection of long time delays of fixed time intervals at six times the continuous amps setting (I_r). See Figure 1 for the possible settings for this switch.

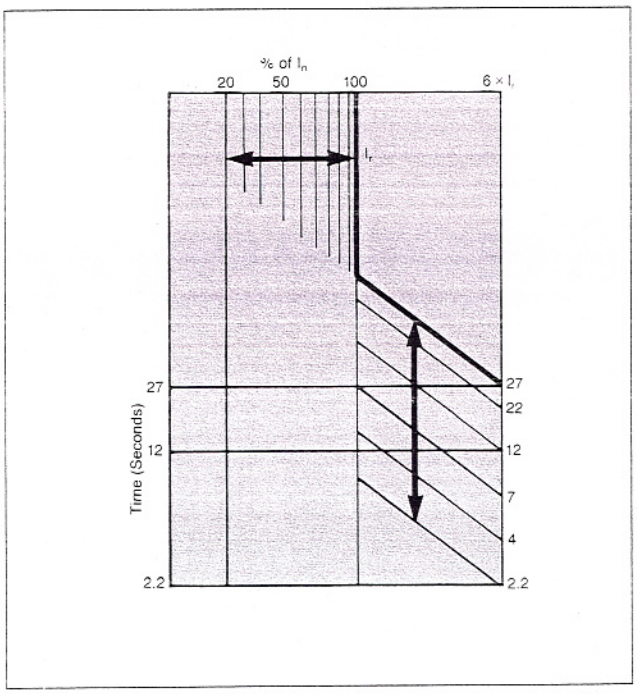

Courtesy of store.ips.us

PD-Frame Trip Adjustments

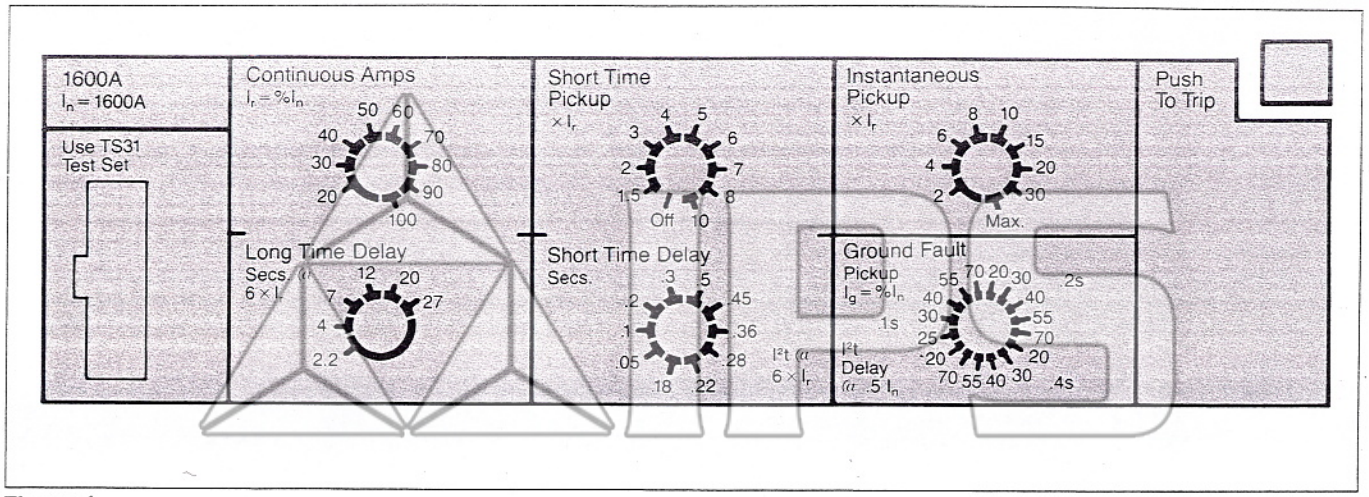

Figure 1

I_n = Maximum circuit breaker ampere rating.
I_r = Current Rating—a function of continuous ampere adjustment setting expressed in % of I_n.

I_g = Ground Fault Pickup—a function of adjustment setting expressed in % of I_n.

Adjustable Short Time Pickup
× I_r

SPD6, SHPD6 models with an adjustable short time pickup switch allow for selection of short time pickup in a range from 1.5 to 10 times the setting of the Adjustable Continuous Amps Switch. The OFF position disables the function. See Figure 1 for the possible settings for this switch.

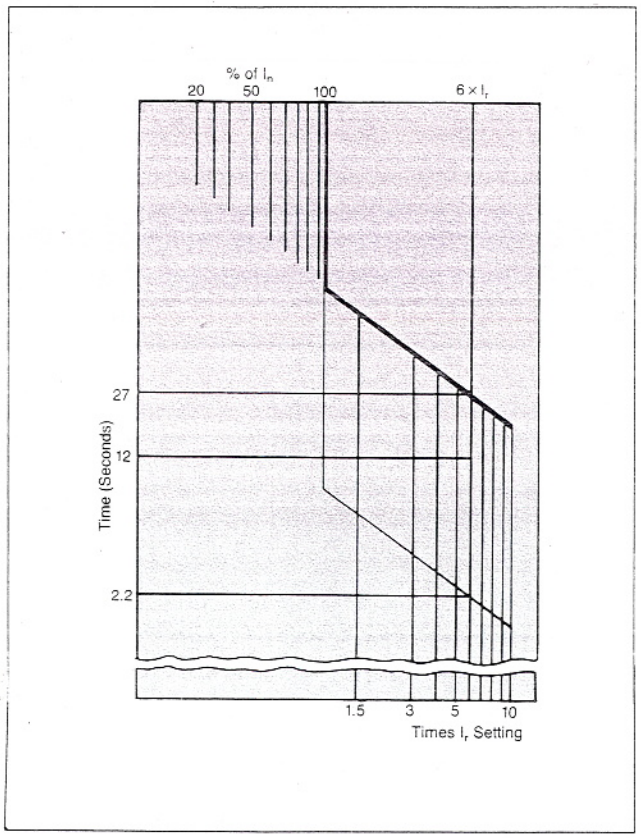

Adjustable Short Time Delay
Seconds

SPD6, SHPD6 models with an adjustable short time delay switch allow for selection from two modes of short time delays. The first range of settings enable the breaker to be set for fixed time delays of .05, .1, .2, .3 or .5 seconds. The second range of settings enable the breaker to be set for short time delays based on I^2t curves at six times the continuous amps setting. See Figure 1 for possible settings for this switch.

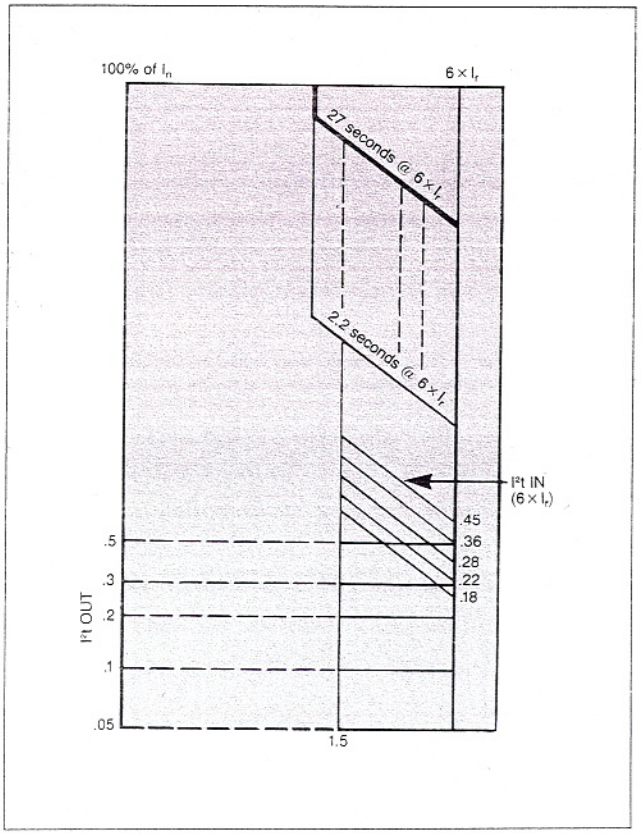

Courtesy of store.ips.us

PD-Frame Trip Adjustments

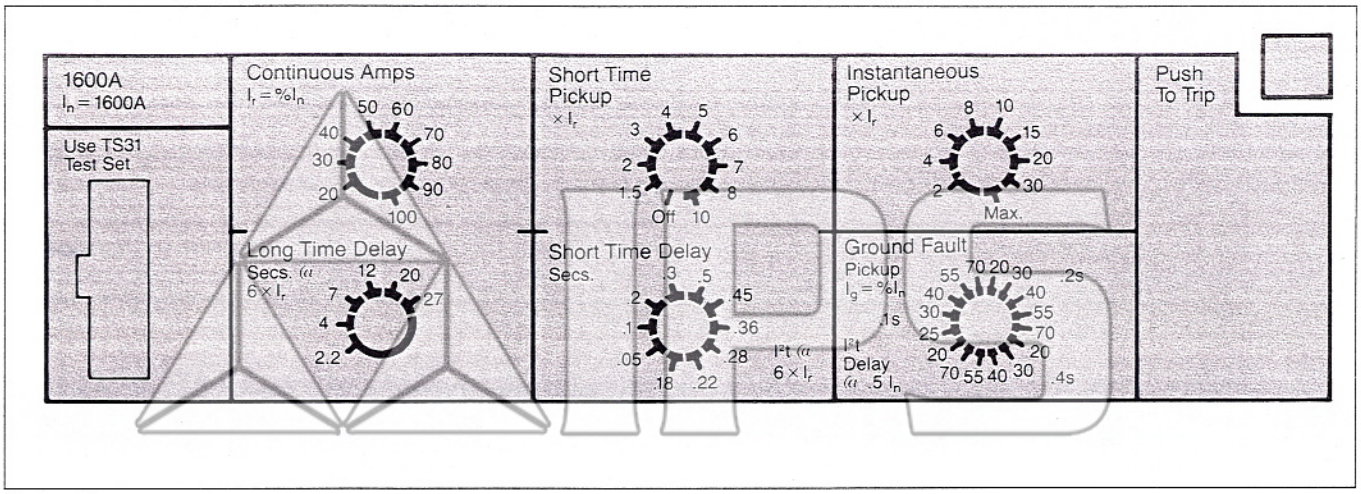

Figure 1

I_n = Maximum circuit breaker ampere rating.
I_r = Current Rating—a function of continuous ampere adjustment setting expressed in % of I_n.

I_g = Ground Fault Pickup—a function of adjustment setting expressed in % of I_n.

Adjustable Instantaneous Trip Switch

× I_r

Instantaneous settings are multiples of the continuous current setting.

NOTE: Maximum instantaneous trip is 10,000 Amps—with instantaneous setting on "MAX", no time delay functions above 10,000 amperes can be obtained.

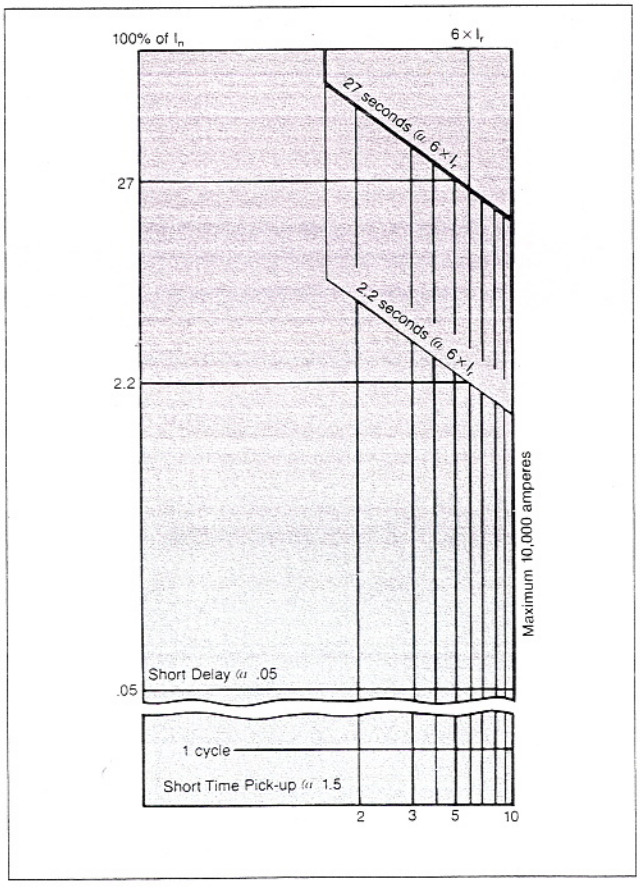

Adjustable Ground Fault Pickup

Pickup I_g = %I_n
Delay I^2t @ .5I_n

Ground fault protection is available for 3 phase, 3 wire and 3 phase 4 wire (neutral) electrical systems. SPD6, SHPD6 models with an adjustable ground fault delay switch allow for the selection of ground fault pickup at 20, 25, 30, 40, 55 or 70% of the maximum amps rating (%I_n), with an I^2t delay of .1, .2, or .4 secs @ .5 × I_n. See Figure 1 for possible settings for this switch.

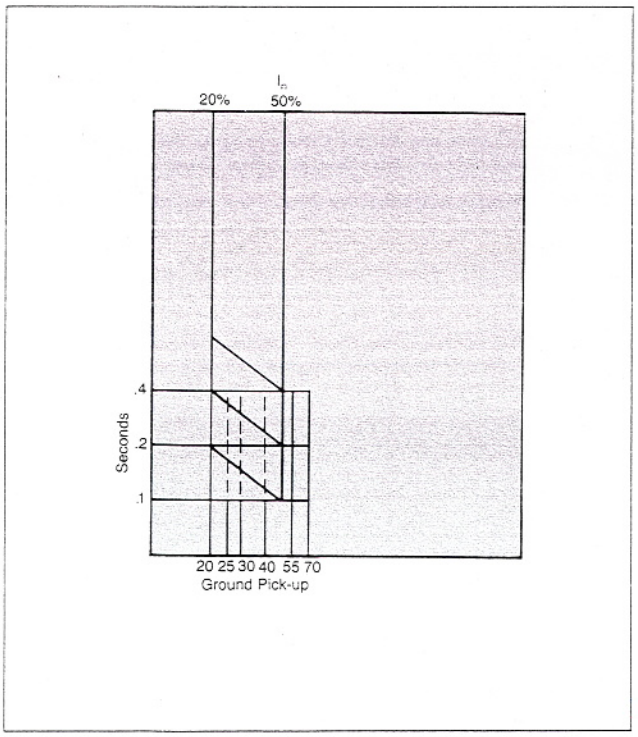

Courtesy of store.ips.us

PD-Frame Time Current Curve

1400-1600A With Short Time Delay Set On Fixed Time

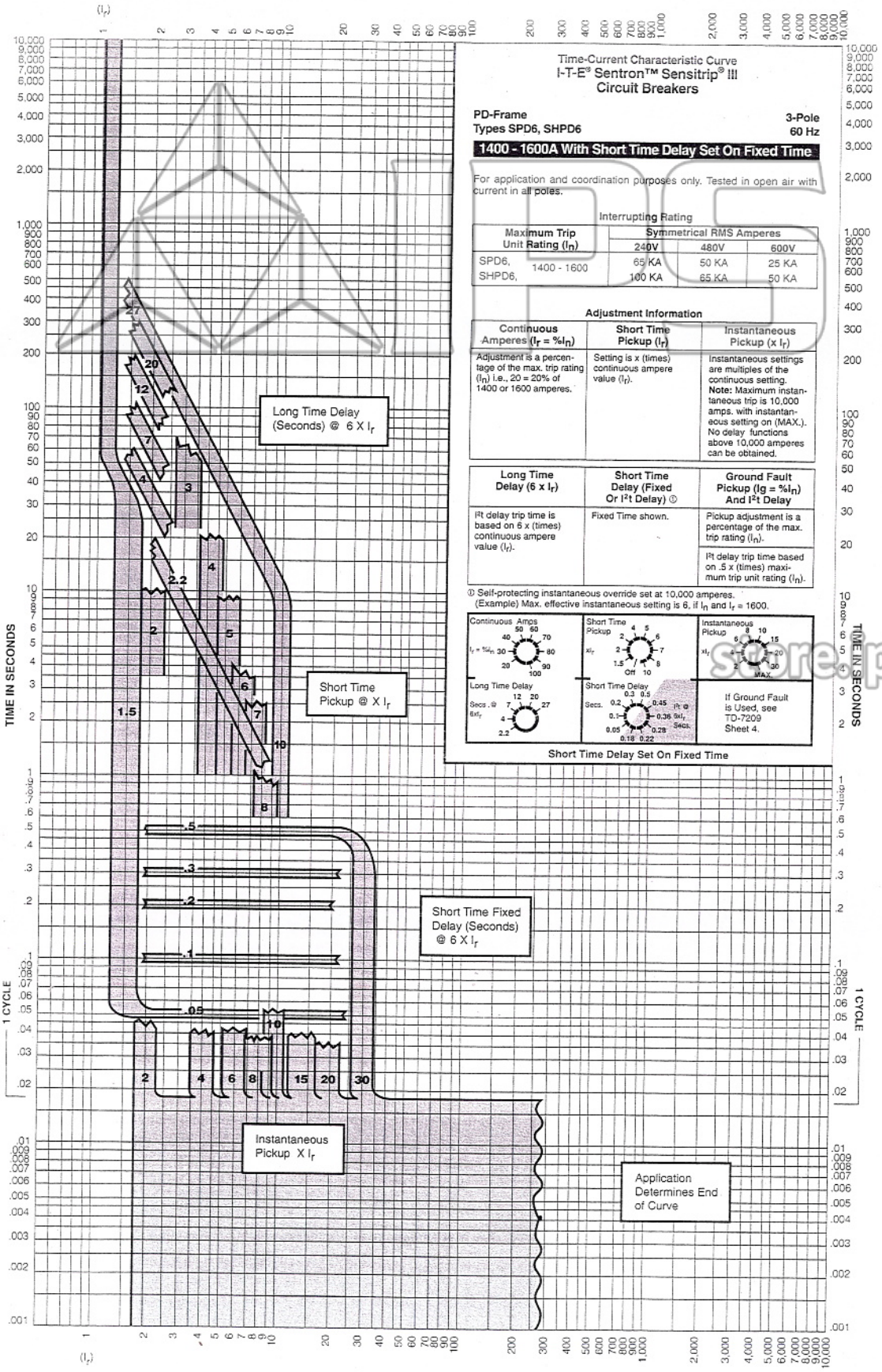

store.ips.us

Courtesy of store.ips.us

PD-Frame Time Current Curve

1400-1600A With Short Time Delay Set On I²t

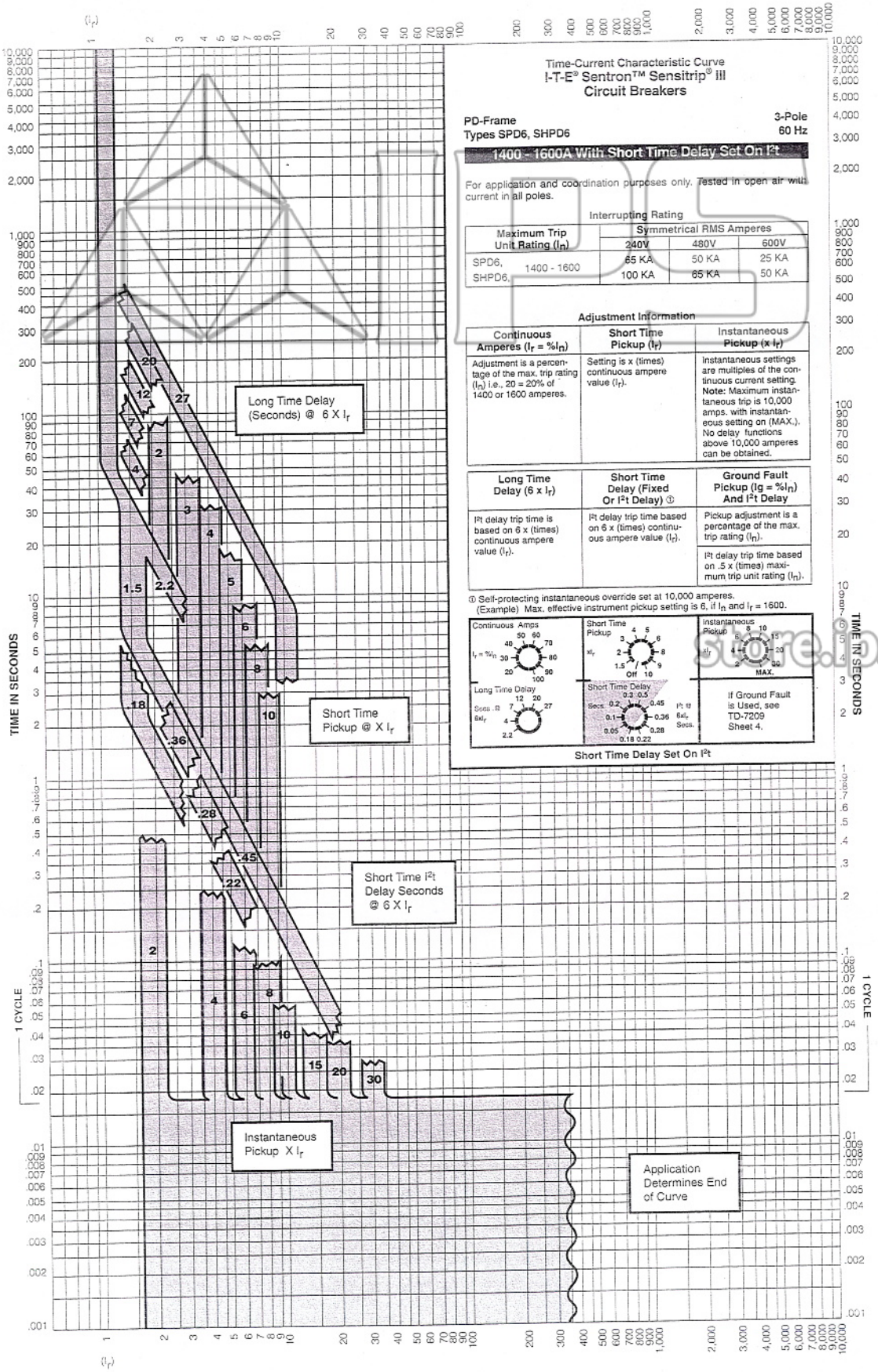

store.ips.us

I-T-E® Sentron™ Sensitrip® III Circuit Breakers
Multiples of Circuit Breaker Continuous Current Setting (I_r) For Long Time Delay, Short Time Pickup and Instantaneous Pickup

Courtesy of store.ips.us

PD-Frame Time Current Curve

1400-1600A Without Short Time Settings

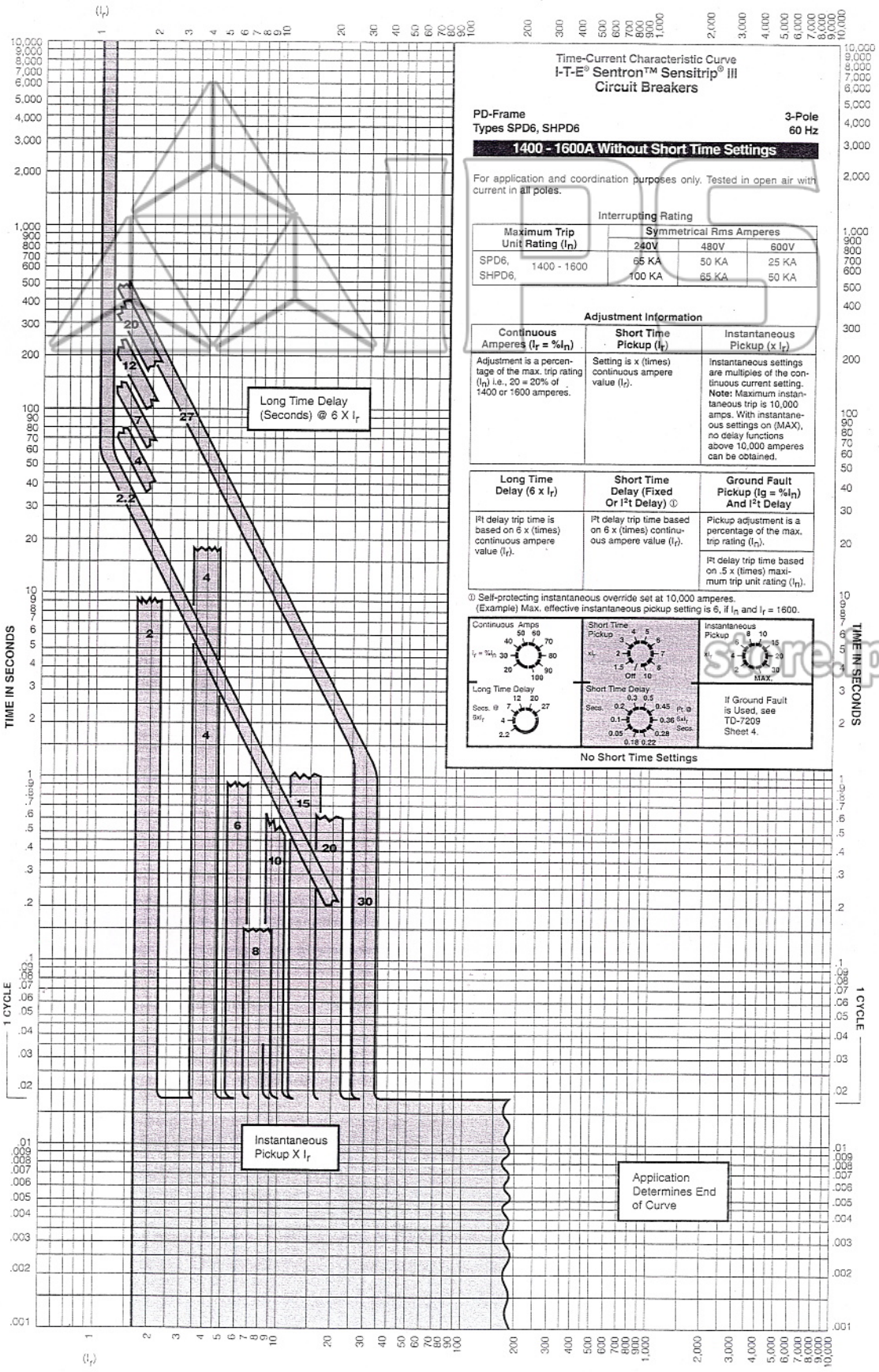

store.ips.us

Courtesy of store.ips.us

PD-Frame Time Current Curve

Ground Fault Trip Data

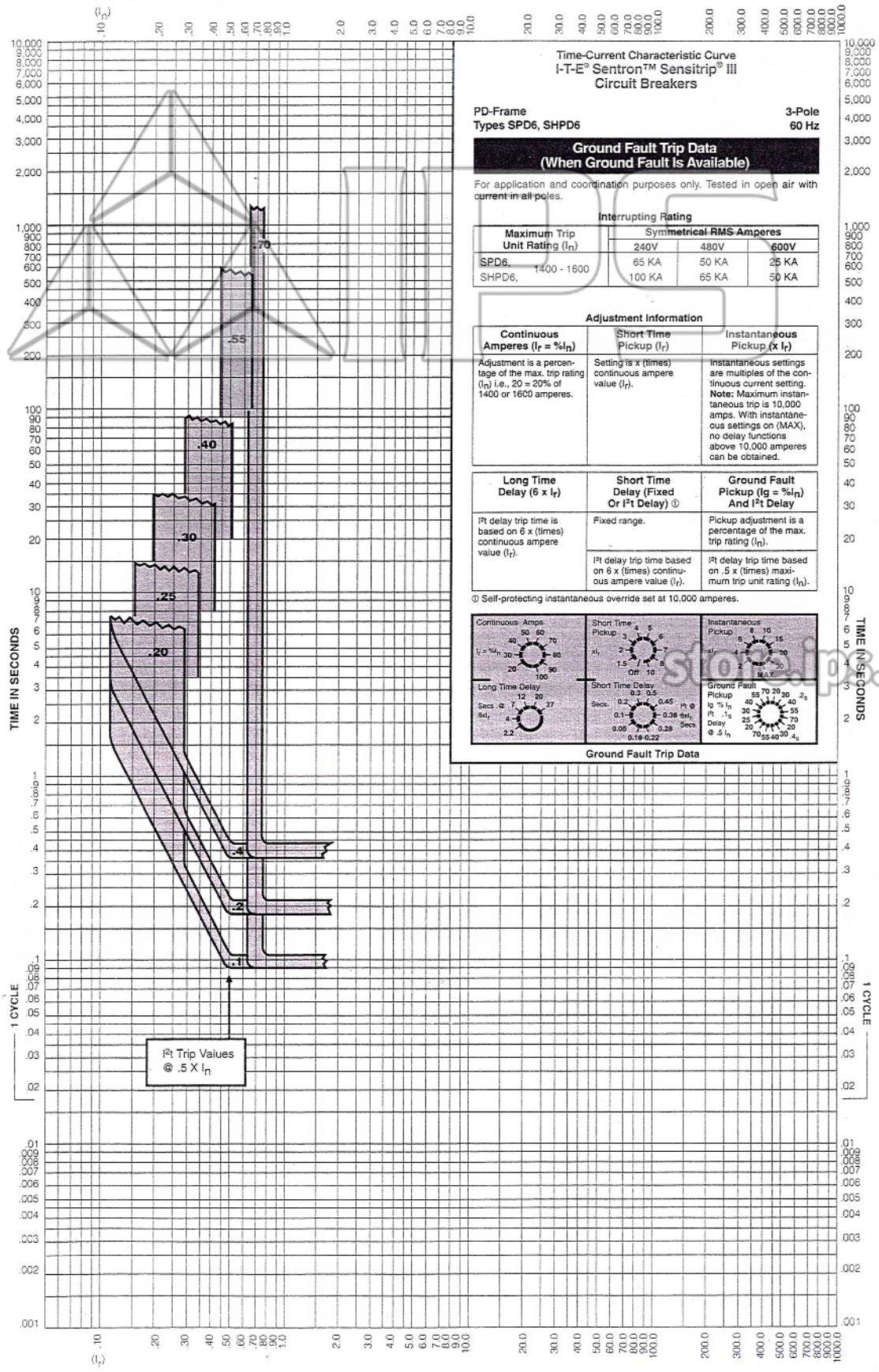

Time-Current Characteristic Curve
I-T-E® Sentron™ Sensitrip® III
Circuit Breakers

PD-Frame — 3-Pole
Types SPD6, SHPD6 — 60 Hz

Ground Fault Trip Data (When Ground Fault Is Available)

For application and coordination purposes only. Tested in open air with current in all poles.

Interrupting Rating

Maximum Trip Unit Rating (I_n)	Symmetrical RMS Amperes		
	240V	480V	600V
SPD6, 1400 - 1600	65 KA	50 KA	25 KA
SHPD6,	100 KA	65 KA	50 KA

Adjustment Information

Continuous Amperes (I_r = %I_n)	Short Time Pickup (I_r)	Instantaneous Pickup (x I_r)
Adjustment is a percentage of the max. trip rating (I_n) i.e., 20 = 20% of 1400 or 1600 amperes.	Setting is x (times) continuous ampere value (I_r).	Instantaneous settings are multiples of the continuous current setting. **Note:** Maximum instantaneous trip is 10,000 amps. With instantaneous settings on (MAX), no delay functions above 10,000 amperes can be obtained.

Long Time Delay (6 x I_r)	Short Time Delay (Fixed Or I^2t Delay) ①	Ground Fault Pickup (Ig = %I_n) And I^2t Delay
I^2t delay trip time is based on 6 x (times) continuous ampere value (I_r).	Fixed range.	Pickup adjustment is a percentage of the max. trip rating (I_n).
	I^2t delay trip time based on 6 x (times) continuous ampere value (I_r).	I^2t delay trip time based on .5 x (times) maximum trip unit rating (I_n).

① Self-protecting instantaneous override set at 10,000 amperes.

Ground Fault Trip Data

Courtesy of store.ips.us

PD-Frame Time Current Curve

Example

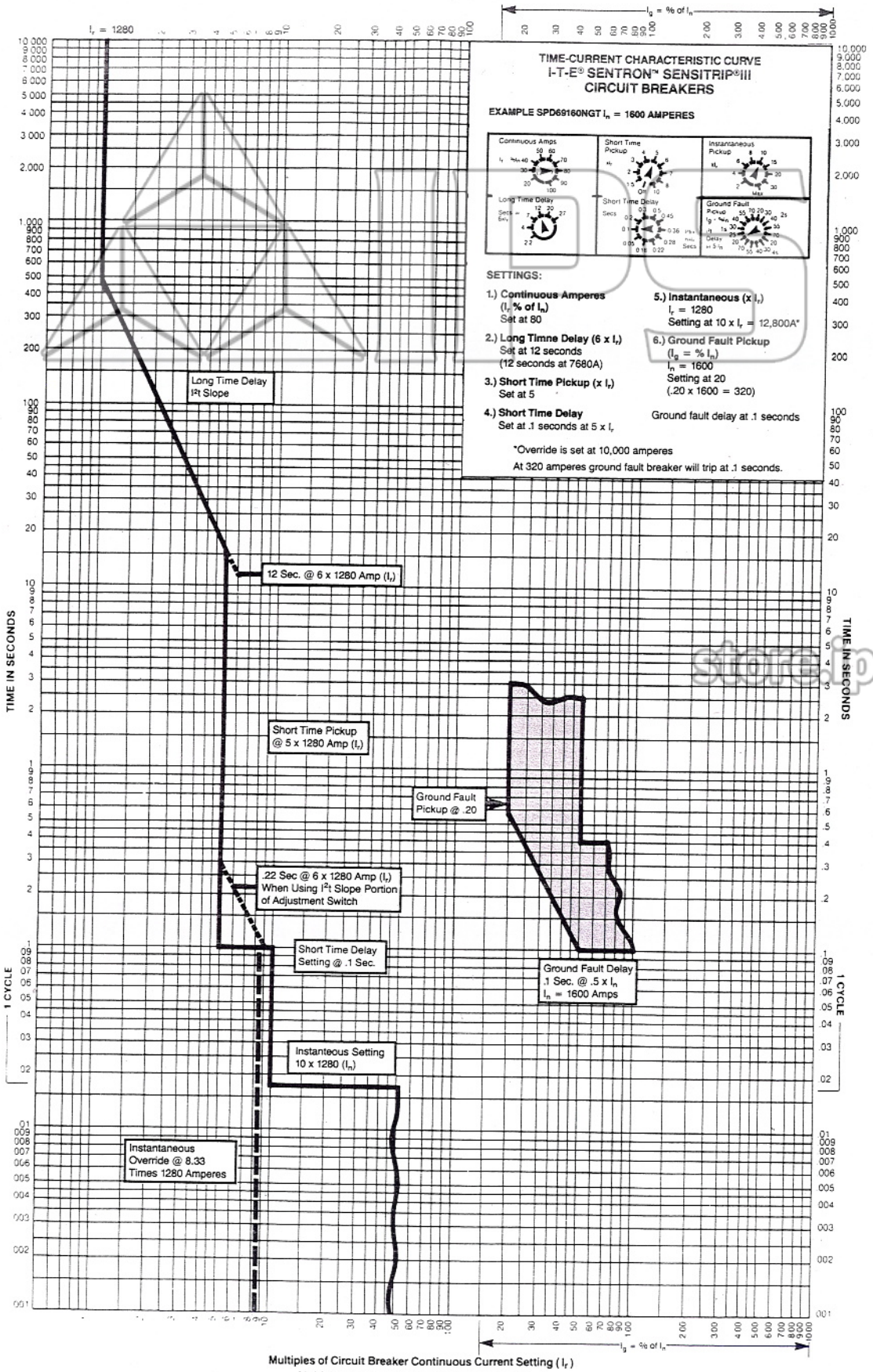

store.ips.us

Courtesy of store.ips.us

I-T-E Mechanical Interlock (MI5405)

⚠ DANGER

Hazardous Voltage. Will cause severe injury or death.

Turn power off supplying device before installing.

⚠ SAFETY INSTRUCTIONS

NOTE: These instructions outline the recommended installation procedures. Installation of a mechanical interlock system prevents use of internal accessories in the left pole of the circuit breakers.

Circuit Breaker Preparation

A. Turn off and lock out all power supplying circuit breaker or frame before removing cover(s) of device and while cover(s) is removed.

B. Remove terminal shield (**1**) from line and load side of breaker frame by removing two #8-32 terminal shield screws (Figure 1).

C. Remove load cover (**2**) from breaker frame by removing six #10-32 x ¾ in. short cover screws and two #10-32 x 1⅜ in. long cover screws (Figure 1).

D. Remove from left pole two socket head cap screws as shown in Figure 1.

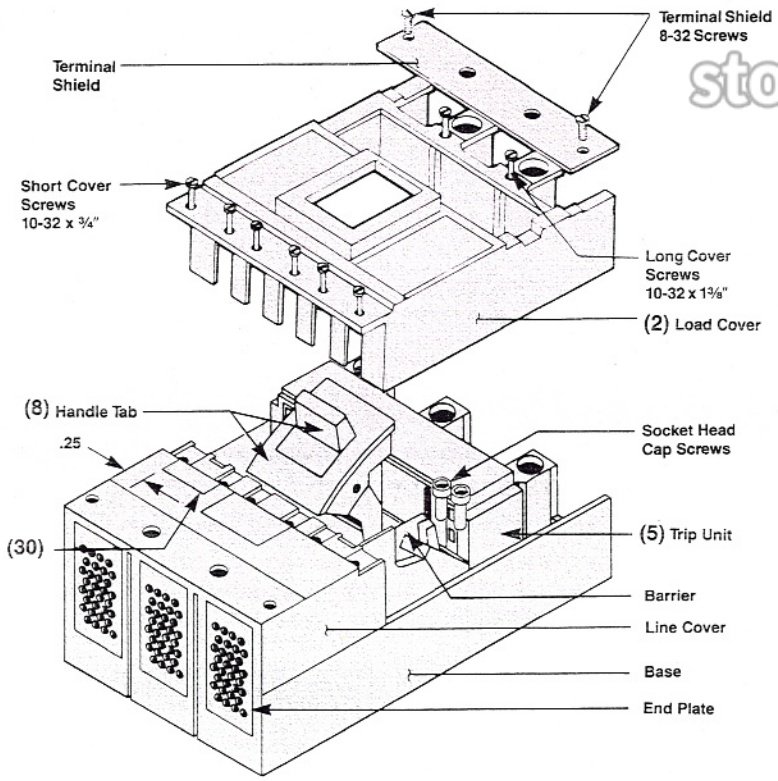

Removing Load Cover

Figure 1

store.ips.us

Courtesy of store.ips.us

E. Referencing Figures 2-4, position 9 in. long tie-bar wrench (**10**) (supplied) over tie-bar connector (**11**) on left pole as shown. Rotate tie-bar in direction of arrow and drop 1 in. thick safety wood block (**12**) between tie-bar connector (**11**) and trip unit (**13**) on right pole. Wood block should come to rest snugly on the two socket head cap screws as shown in Figure 4. Remove wrench.

NOTE: When properly installed, the top of the safety wood block will be flush with the top of the trip unit. IF NOT INSTALLED PER THESE INSTRUCTIONS, PERSONAL INJURY COULD RESULT.

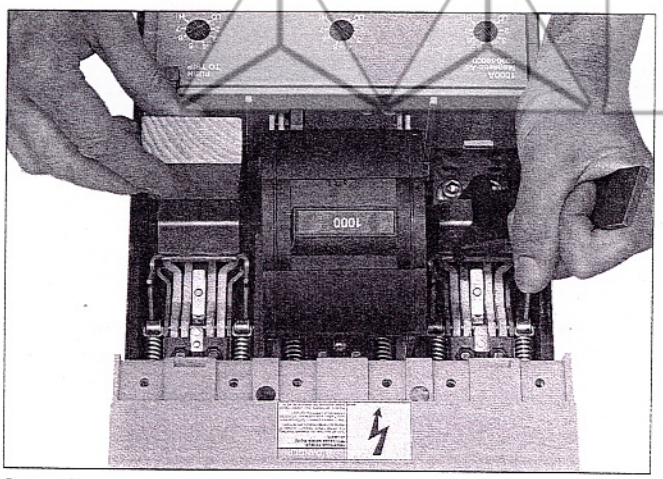

Securing Tie Bar Connector

F. Assemble support-tie bar assembly (**14**) as shown in Figure 2, and insert plunger (**15**) through rectangular opening in base from bottom of base. Tie bar member (**16**), which is a part of (**14**), must engage tie-bar connector (**11**). Plunger locator pin (**17**) of link assembly, also a part of (**14**), must engage hole in plunger (**15**). Replace two 5/16-18 socket head cap screws (**1**) and tighten to 140 in-lbs.

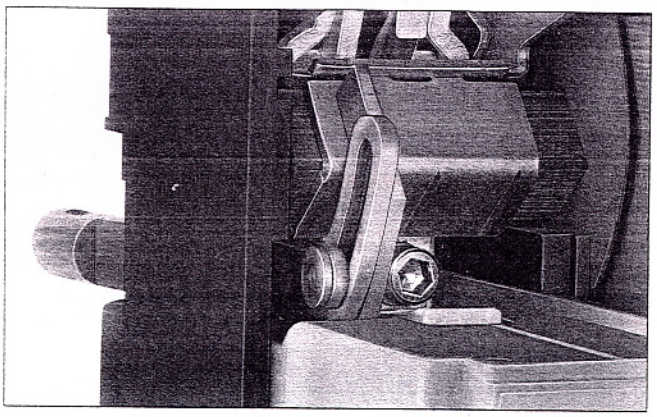

Position of Link Assembly

G. Position tie-bar wrench (**10**) over tie-bar connector (**11**) being careful not to damage support-tie bar assembly (**14**). Rotate tie bar in direction of arrow and remove wood block (**12**). Carefully remove tie-bar wrench.

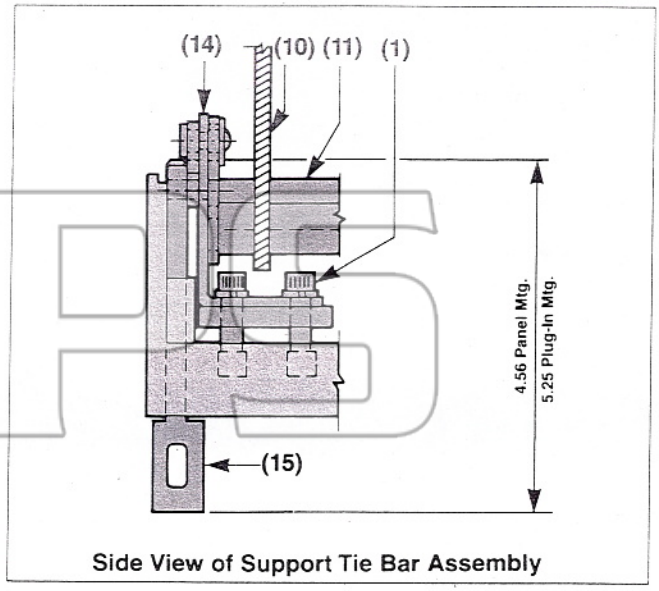

Side View of Support Tie Bar Assembly

Figure 2

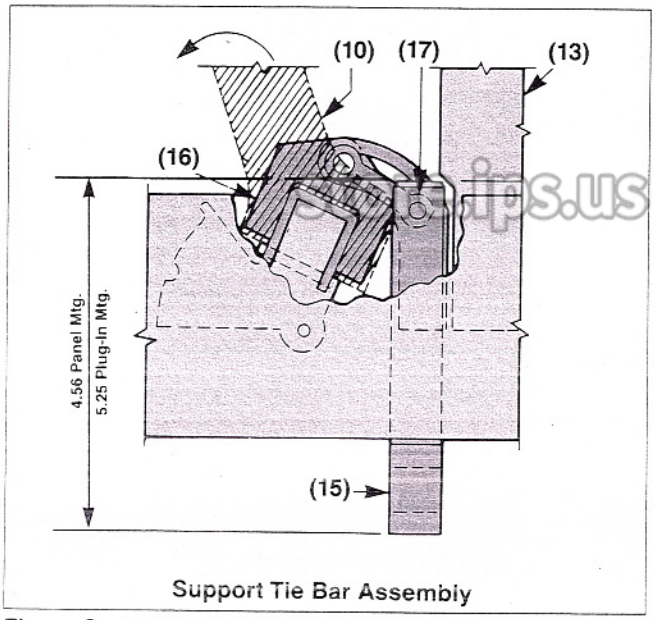

Support Tie Bar Assembly

Figure 3

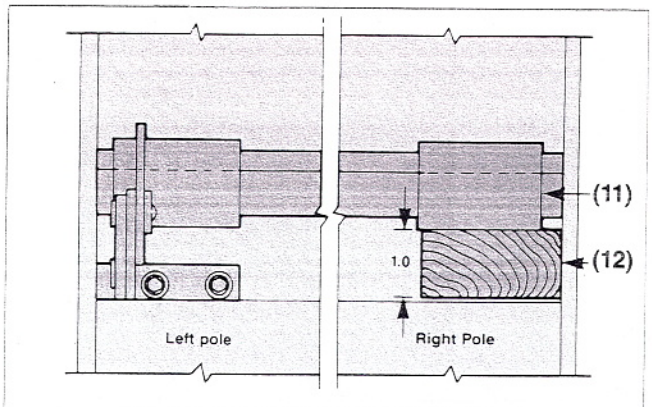

Tie Bar Connector and Wood Block

Figure 4

Courtesy of store.ips.us

H. Replace handle, if removed, being certain to align handle tab toward line end. Replace load cover. The six #10-32 x ¾ in. screws must be installed toward the line side of the circuit breaker; the two #10-32 x 1⅜ in. screws are installed on the load end. Tighten all load cover screws to 25 in-lbs.

Mounting Preparation

I. The connect-all mounting block assemblies (Cat. No. MB9301) must be positioned in the panelboard using the mounting support hole locations shown in Figure 5. Also shown is the location of the desired 27″ x 23″ panel clearance opening behind the connect-all assemblies.

J. Mount the two connect-all mounting block assemblies (Cat. No. MB9301) in accordance with the MB9301 Installation Instructions. Referencing Figure 6, use a straight edge to confirm that the connect-all assemblies are aligned in the vertical plane. Adjust if necessary.

K. Referencing Figure 7, attach the bracket (**18**) to the mechanical interlock mounting pan (**19**) using the #10-32 flat head screws (**20**), lockwashers (**21**) and nuts (**22**) supplied. Torque to 32 in-lbs. Temporarily install the rocker arm (**23**) in the bracket to assure that the plunger (**15**) openings in the ends of the rocker arm align with the 1″ diameter holes in the mounting pan. Adjust if necessary. Remove the rocker arm after alignment is confirmed.

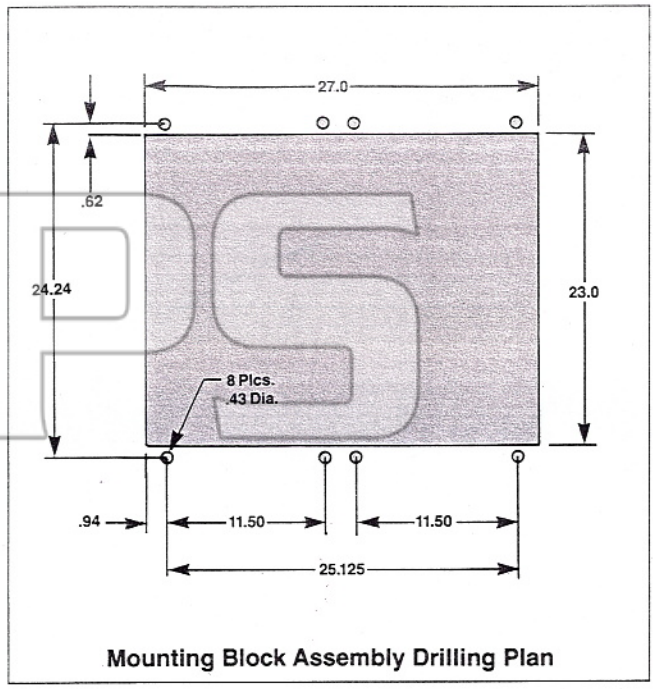

Mounting Block Assembly Drilling Plan

Figure 5

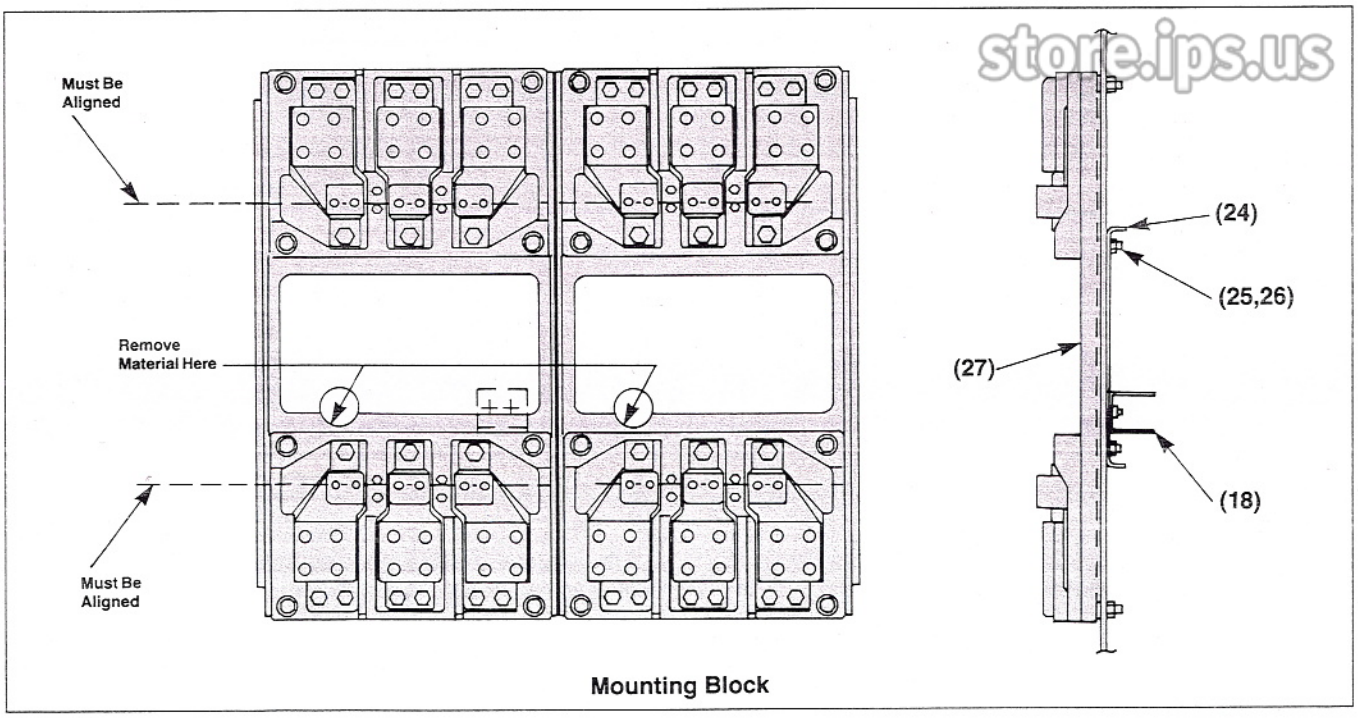

Mounting Block

Figure 6

store.ips.us

Courtesy of store.ips.us

L. Reference Figure 6. The mechanical interlock pan (**24**) must be attached to the connect-all assemblies in the position shown to provide a mounting surface for the interlock and to insure dimensional stability between the two interlocked circuit breakers. Install the interlock pan after removal of the eight ⅜ in. hexagonal head nuts and washers (**25,26**). Reuse the nuts, flat washers and lockwashers to secure the pan. Torque to 230 in-lbs.

M. Reference Figure 6. Material must be removed from both of the connect-alls' aluminum frames (**27**) to provide clearance for the interlock plungers. Using the 1″ diameter holes in the mechanical interlock mounting pan as template guidelines, file or rout the connect-all frames to obtain a complete 1″ diameter clearance hole.

N. Position the circuit breakers on the connect-all assemblies by carefully guiding the protruding plungers through the 1″ diameter holes in the interlock mounting pan. Secure the circuit breakers to the connect-all assembly, following the Circuit Breaker Installation Instruction (Literature No. 72643). All end plates must be installed.

O. Referencing Figure 7, assemble the rocker arm (**23**) to the bracket (**18**). The plungers (**15**) will pass thru the holes in the rocker arm.

NOTE: Heads of all rocker arm pins (**28**) must be on upper side of assembly and cotter pins (**29**) on lower side. Insert cotter pin into hole in rocker arm pin and spread ends.

P. Attach both plungers (**15**) to rocker arm with rocker arm pins (**28**). Secure the pins as per NOTE of step O.

Q. Affix labels (**30**) to front of both circuit breakers as shown in Figure 1.

Check Operation

R. With both circuit breakers in "OFF" position, interlock must move freely.

S. With one circuit breaker "ON", the other circuit breaker must not close.

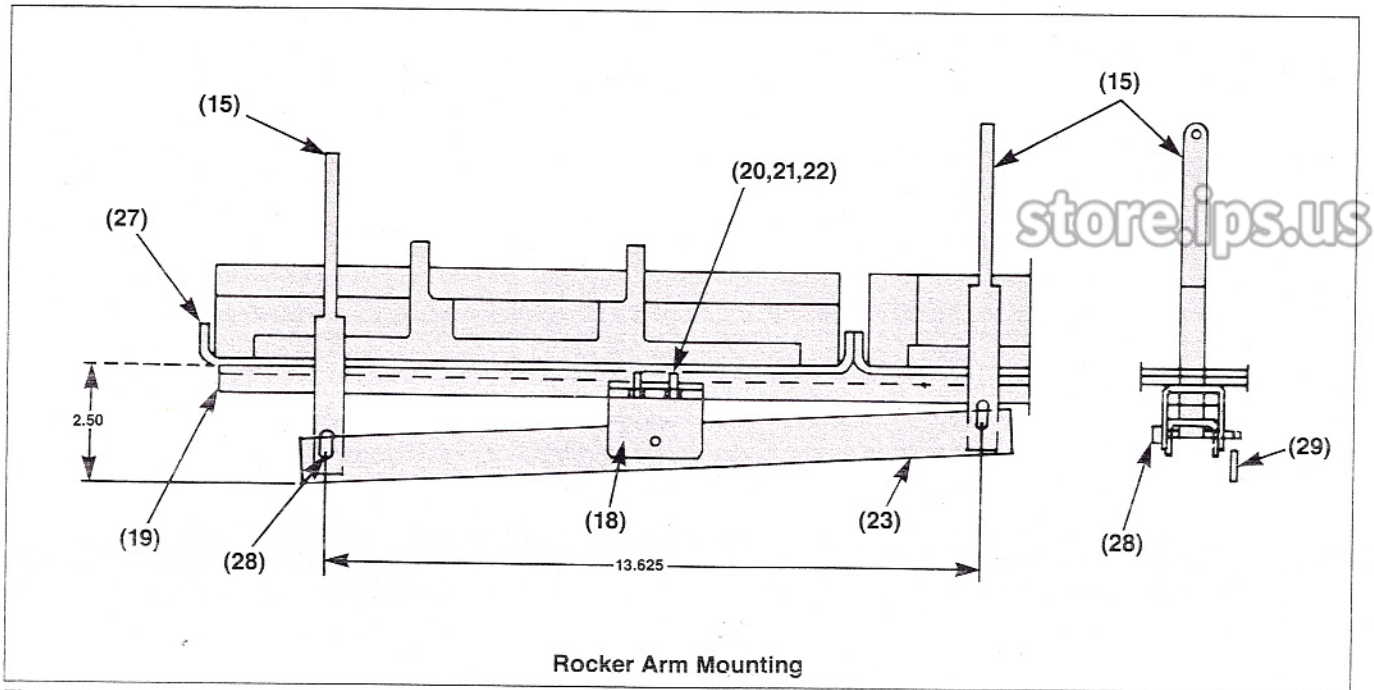

Rocker Arm Mounting

Figure 7

store.ips.us

Courtesy of store.ips.us

PD-Frame Neutral Sensing Transformer

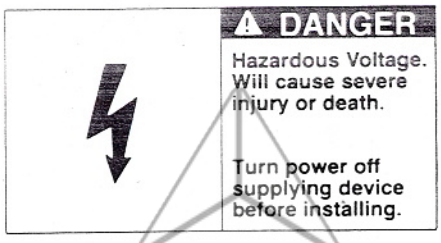

SAFETY INSTRUCTIONS

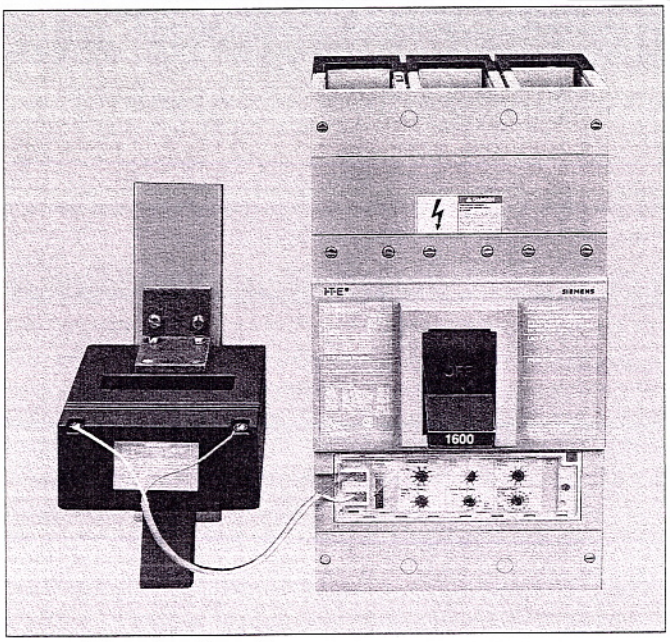

Neutral Sensing Transformer

General

The I-T-E Neutral Sensing Transformers are available in 1400 and 1600 amp ratings. The neutral sensing transformer is designed to accept either (**3**) 750 mcm (max) cables or (**1**) 4 in. × ¾ in. (max) bus bar. The transformer can be mounted with either side up. Transformer terminals X_1 and X_2 are marked for standardization only. These terminal connectors can be made either by crimp ring or with bare conductors (16 AWG max). The label provided denoting the addition of the neutral sensing transformer is to be affixed to the side of the breaker.

NOTE: This instruction outlines the recommended installation procedure for the N14SPD and N16SPD.

Ampere Rating (I_n)	Catalog Numbers
1400	N14SPD
1600	N16SPD

Caution: The ampere rating of the transformer must be the same as the circuit breaker Max. Rating (I_n) for proper operation. Failure to match neutral sensor ampere rating with breaker ampere rating may result in nuisance tripping or no trip due to ground fault which could result in property damage.

Bus Bar System Mounting.

A. Turn OFF power feeding this device before starting the installation.

B. Also Turn OFF any line power within the immediate vicinity to prevent the incidental or accidental contact of tools by the installer.

C. Select a position which is as close as possible to the circuit breaker trip unit.

D. Drill or punch four 0.313 in. diameter holes in the hole pattern (Figure 1).

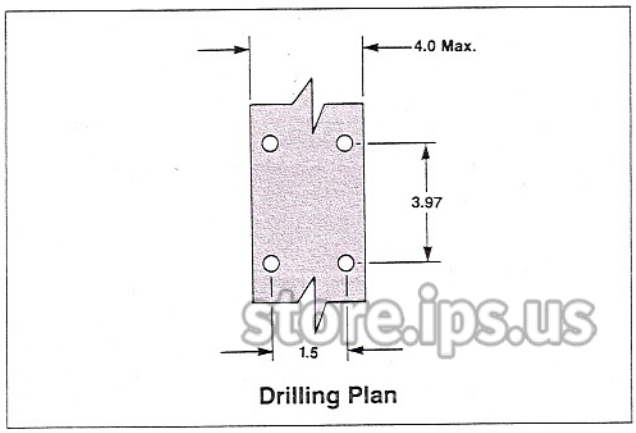

Figure 1

NOTE: Mount screws (**3**) in direction shown (Figure 2) to maintain electrical spacing.

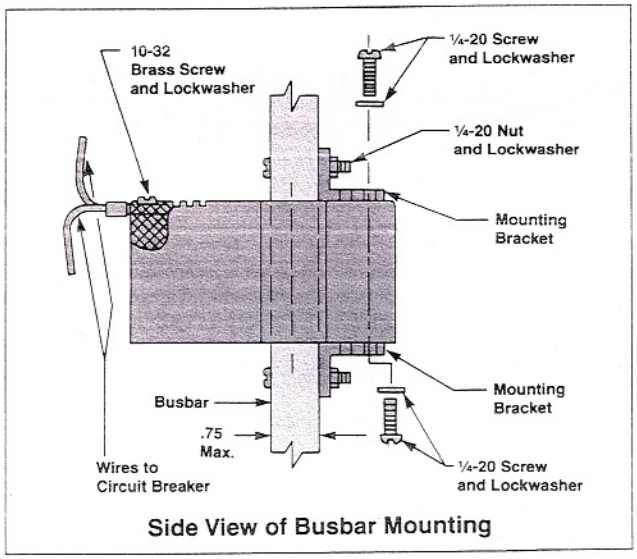

Figure 2

E. Connect leads from terminal X_1 and X_2 (**5**) on the neutral sensing transformer (**2**) using the 10-32 terminal screws (**6**) provided.

Courtesy of store.ips.us

PD-Frame Neutral Sensing Transformer

Breaker Label (Figure 3)

A. This label is to be attached to the associated circuit breaker at installation.

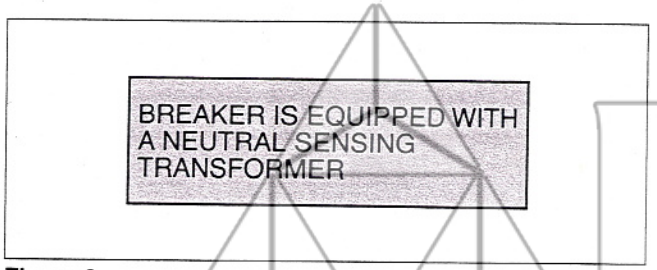

Figure 3

Wiring Configuration (Figures 4 and 5)

A. For wiring and neutral orientation for residual mode ground fault see diagrams (Figure 4 and 5).

NOTE: DO NOT use these neutral transformers with the following circuit breakers:

N14SPD with: SPD69140G, SPD69140NGT, SHPD69140G, SHPD69140NGT.

N16SPD with: SPD69160G, SPD69160NGT, SHPD69160G, SHPD69160NGT.

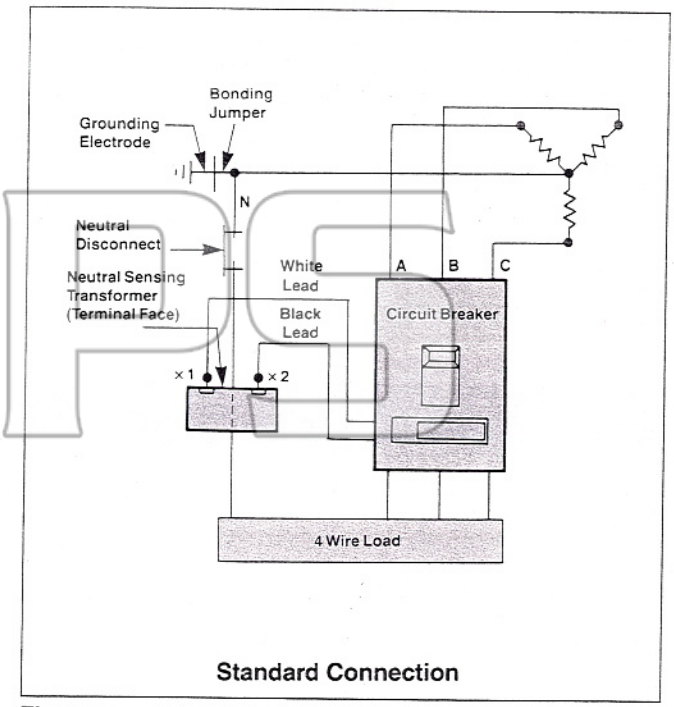

Standard Connection

Figure 4

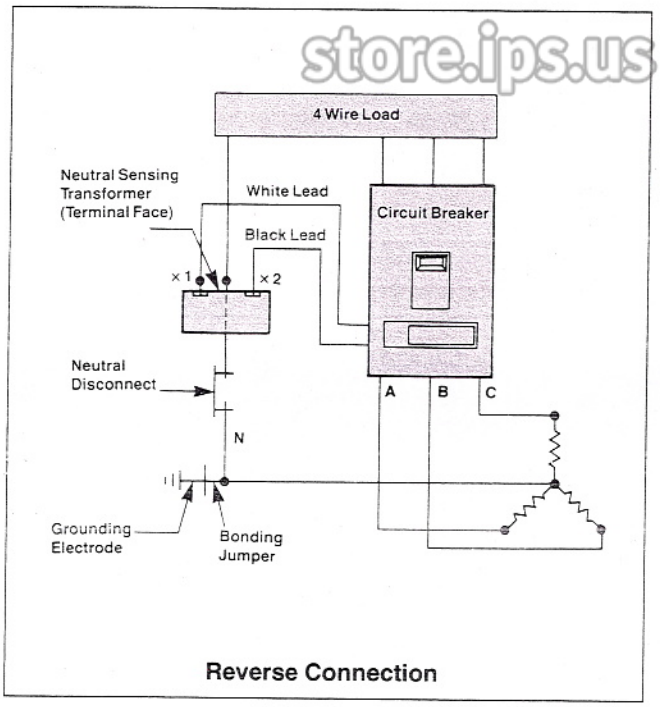

Reverse Connection

Figure 5

store.ips.us

Courtesy of store.ips.us

PD-Frame Universal Test Kit (TS-31)

⚠ DANGER

Hazardous Voltage.
Will cause severe injury or death.
Turn power off and lock out all power supplying breaker to be tested before removing cover(s) and during testing.
Replace all covers and shields before power supplying breaker is turned on.

⚠ SAFETY INSTRUCTIONS



Universal Test Kit

NOTE: General Information
(Detailed instructions supplied with kit)

Operating Instructions

A. Remove electrical loads from the circuit breaker.

B. Plug the TS-31 test set into a grounded 120 vac receptacle and turn it on. You will be greeted by the identifying turn-on message:

> Siemens Energy & Automation, Inc.
> TS-31 Test Set. Press any key to continue.

C. Select the appropriate ribbon cable assembly and connect it between the TS-31 and the circuit breaker, making sure of alignment and polarity. After pressing ENTER, the TS-31 will prompt:

> Enter Catalog Number:

D. Type in the catalog number of the circuit breaker if a JD, LD, MD, ND, PD FRAME. If the unit being tested is an SB ENCASED BREAKER, type in the catalog number of the trip unit (currently on the side of the trip unit proper and the side of the circuit breaker if the unit was factory installed.) After entering the catalog number information, press the ENTER key. The TS-31 will respond with:

> Searching Catalog . . .
> Searching Family/Series . . .

If an invalid catalog number has been entered, the TS-31 will respond with:

> XXX...NOT found.
> Press any key to continue.

and you will be asked to enter another catalog number.

E. If valid catalog number has been entered, the TS-31 will prompt for the breaker settings.
The TS-31 will respond with:

> Enter Continuous Current Setting in %:

If the unit being tested is an SB ENCASED BREAKER trip unit set the continuous setting to 100% (this equals the value of the rating plug which is referred to as I_r)

> Enter Long Time Delay in Seconds:

> Enter Instantaneous Pickup Setting:

For breakers with short time functions you will be asked one of the following:

> Enter Short Time Pickup:

> Select Short Time Delay: 1-fixed 2-I^2t:

> Enter Short Time Delay in Seconds:

For breakers with ground fault you will be asked:

> Select Ground Fault Type: 1 - Residual
> 2 - Gnd. Return 3 - Unsure:

> Enter Ground Fault Pickup Setting in %:

> Enter Ground Fault Delay: 1-fixed 2-2-I^2t:

> Enter Ground Fault Delay in Seconds:

In each case, enter your breaker's switch settings. For example if your breaker is set for 70% type 70 and then press ENTER. Entry of erroneous data in the above steps will result in false tests and results.

F. After entering the breaker switch settings, you must select the test you wish to have performed:

> Enter test: L-Long S-Short I-Inst.
> G-Gnd. Fault C-CT Cont.?

"L" – Long time or overload test.
"S" – Short time test.
"I" – Instantaneous test.
"G" – Ground fault test.
"C" – Current transformer continuity test.

G. If you press ENTER, you will be prompted for the phase to be tested: The TS-31 will display:

> Enter Phase to Test:

Enter one of the following letters:
"A" – Phase A or Left Pole
"B" – Phase B or Center Pole
"C" – Phase C or Right Pole

Courtesy of store.ips.us

H. The TS-31 will report the type of test you selected and give you a chance to abort the test. For example, if "I" was pressed above. The TS-31 will display:

```
Instantaneous Test
Press ENTER to Continue or A to Abort.
```

If you pressed the letter "A" to abort, you will be asked to enter again.

```
Change: 1-Test  2-Catalog  3-Settings:
```

I. Press ENTER again to start the test. Press any other key to STOP the test. Once a test has been started, the TS-31 will respond with:

```
Trip test. Press Any Key to Abort.
Time Remaining: xx.xxx Sec.
```

Be careful at this time. Any key press will abort the test.

Caution: Handling of the test cable, the breaker, or the trip unit at this time can cause electric shock which may result in injury and/or death.

J. The test may take anywhere from a fraction of a second to minutes to complete, depending on which procedure was run. If the test passes, the display will show the following, depending on whether the breaker tripped or not.

```
Test Passed. xxx.xx Sec.
Press any key to continue.
```

If the breaker tripped during the test, RESET the circuit breaker before continuing.

The TS-31 will prompt for the next instructions. The display will show:

```
Change: 1-Test  2-Catalog  3-Settings.
```

Enter one of the following numbers:

"1" – Select a new test
"2" – Enter a new catalog number
"3" – Enter a new switch setting

If you enter "1" you will be sent to step F. Choosing a "2" will send the program back to step E. Entering "3" which sends you back to step E, will be slightly different the second time through. On the second line after the prompt for the setting, a number or text in brackets will appear. This will indicate the last setting you entered. If you DON'T wish to change a setting, just press ENTER. If you DO wish to change a setting, type in the new setting and press ENTER.

L. If you pressed "C" when asked.
You will first be prompted by:

```
Current Transformer Test
Press ENTER to Continue or A to Abort.
```

and then for the phase to test. A message will then appear stating the test results. For example:

```
CT Resistance Test. Phase X PASSED.
Press any key to continue.
```

M. There are additional ERROR messages which may appear on the display during this operation which were not covered previously:

```
Test Not Running—Check Test Cable.
Press enter to continue.
```

The test set has sensed that current is not flowing properly in the breaker under test and that there is either an open or short circuit between the TS-31 and the breaker trip unit.

```
Ground Fault is NOT available on a SJD69300.
Press any key to continue.
```

You will get this message if you enter a choice that is not available, such as entering "G" in step F for ground fault test on a catalog number that does not have ground fault.

```
Inconclusive Test, Check Settings.
Press any key to continue or A to Abort.
```

NOTE: This warning will appear if you attempt to run a short time test with the instantaneous pickup set equal to or below the short time pickup. It would also appear if you tried to run a long time test with the short time pickup set to 2. This is only a warning; the test can still be run. However, passing or failing the test may not be conclusive.

```
XX is NOT a Valid Setting.
Press any key to continue.
```

NOTE: This message will appear if you enter a setting value that does not exist. For example, a SMD69700ANGT has continuous current settings of 20, 30, 40, 50, 60, 70, 80, 90, and 100 percent. If you were to enter any other value that those listed, the above message will appear.

```
Test Exceeds Capability of TS-31.
Press any key to continue.
```

NOTE: This message is not likely to occur. If it does, it means that a test requires more current to run than the TS-31 can produce.

```
Unit Too Hot, Please Wait.
```

NOTE: Running many successive high-current long time tests may over-heat the test set. It will protect itself from damage by preventing further tests until it has had a chance to cool down. The display will indicate when testing can resume.

Courtesy of store.ips.us

Ordering Information

Circuit Breaker Catalog Numbers

SPD6
3-Pole, 600V AC

Catalog Number	Max. Cont. Current Rating	Cont. Current Setting	Long Time Delay	Instantaneous Setting	Short Time Pick Up	Short Time Delay	Short Time I^2t Pick Up	Ground Fault Pick Up	Ground Fault Delay	UL Interrupting Ratings (kA) (RMS Symmetrical Amperes) Volts AC 120	120/240	240	277	480	600
SPD69140	1400	✓	✓	✓								65		50	25
SPD69160	1600	✓	✓	✓								65		50	25
SPD69140G	1400	✓	✓	✓				✓	✓			65		50	25
SPD69160G	1600	✓	✓	✓				✓	✓			65		50	25
SPD69140NT	1400	✓	✓	✓	✓	✓	✓					65		50	25
SPD69160NT	1600	✓	✓	✓	✓	✓	✓					65		50	25
SPD69140NGT	1400	✓	✓	✓	✓	✓	✓	✓	✓			65		50	25
SPD69160NGT	1600	✓	✓	✓	✓	✓	✓	✓	✓			65		50	25

SHPD6
3-Pole, 600V AC

SHPD69140	1400	✓	✓	✓								100		65	50
SHPD69160	1600	✓	✓	✓								100		65	50
SHPD69140G	1400	✓	✓	✓				✓	✓			100		65	50
SHPD69160G	1600	✓	✓	✓				✓	✓			100		65	50
SHPD69140NT	1400	✓	✓	✓	✓	✓	✓					100		65	50
SHPD69160NT	1600	✓	✓	✓	✓	✓	✓					100		65	50
SHPD69140NGT	1400	✓	✓	✓	✓	✓	✓	✓	✓			100		65	50
SHPD69160NGT	1600	✓	✓	✓	✓	✓	✓	✓	✓			100		65	50

Note: "G" suffix in catalog number denotes circuit breaker for 3 phase, 3 wire systems.
For 3 phase, 4 wire, order correct 4th wire (neutral) transformer as separate and additional item.

store.ips.us

Neutral Transformers

Ampere Rating	Catalog Number
1400	N14SPD
1600	N16SPD

Courtesy of store.ips.us

Ordering Information, UL Listings and File Numbers

Item	Catalog No.
Extension Handle	EX11
Mounting Screw Kit	MSPR6
Pressure Wire Connector Kits	
(1-5) 300-400 kcmil Cu/Al	TA 5P600
(1-5) 500-600 kcmil Cu/Al	TA5P600
(1-4) 750 kcmil Cu Only	TA4P750
(1-5) 300-600 kcmil Cu Only	TC5R600
Handle Blocking Device	MN6BL
Padlocking Device	MN6HPL
Connect-All Mounting Blocks	
Standard	MB9301
Reverse	MBR9302
Mechanical Interlock	MI5405
Handle Operators	
Rotary – Standard Depth	
Complete Mechanism	RHONSD
Handle Only ①	RHOH
Breaker Operator	RHONBO
Standard Length Shaft	RHONSSD
Rotary – Variable Depth	
Complete Mechanism	RHONVD
Handle Only ①	RHOH
Breaker Operator	RHONBO
Standard Length Shaft	RHONSVD
Max/Flex™ Flange Mounted	
Complete Mechanism	FHONO48
Handle Only ②	FHOHN
Breaker Operator	FHONBO
Cable Operator ③	FHONCO48
Motor Operator	
120V AC (Hinged to the right)	MOMN6120
120V AC (Hinged to the left)	MOMN6120L
240V AC (Hinged to the right)	MOMN6240
240V AC (Hinged to the left)	MOMN6240L
Enclosures	
Type 1	MND61
Neutral Assembly	N-2000
Door Latch Mechanism	
Left Side	DKL2,DKL3
Right Side	DKR2,DKR3
Time Current Curves	
SPD6, SHPD6	TD-7209

① For 4x application use RHOH4 handle in place of RHOH.
② For 4x application use FHOHN4 handle in place of FHOHN.
③ Optional cable length of 60 in. available, order FHONCO60.

National Fire Protection Assoc. (National Electric Code®).
Federal Specification C-375B/GEN.
Underwriters Laboratories, Inc. (UL 489).
Canadian Standards Association (C22.2 No. 5).

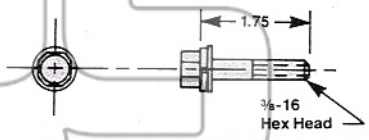

Heat Sink Mounting Hardware
Torqued 108 To 120 in. lbs.

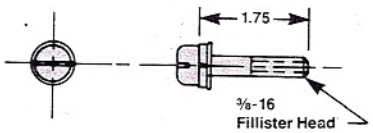

Breaker Mounting Hardware
Torqued 60 To 72 in. lbs.

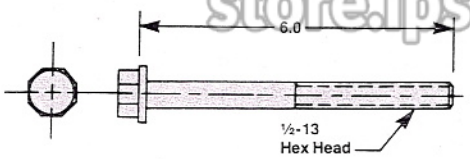

Wire Connector Mounting Hardware
Torqued 300 in. lbs.

I-T-E Item	UL-489 File Number	CSA Report Number
Breakers	E10848	LR13077
Terminal Connectors	E23615 (SP)	—
Add-On Internal Accessories	E69455	LR13077
Shunt Trip		
Undervoltage Trip		
Aux. Switch		
Bell Alarm Switch		
Molded Case Switch	E68312	LR42022
Enclosures	E10848	—
Motor Operators	E102933	—

Handle Operating Forces

Operation	Lb. wo/Ext.	Lb. w/Ext.
OFF to ON	75	40
ON to OFF	85	46
TRIPPED to RESET	130	70

store.ips.us
Courtesy of store.ips.us

SIEMENS

Siemens Energy
& Automation, Inc.
3333 State Bridge Rd.
Alpharetta, GA 30202

Siemens Energy & Automation Sales Offices

Alabama
Birmingham
(205) 879-7030
Mobile
(205) 621-0822
Montgomery
(205) 271-4486

Alaska
Anchorage
(907) 346-2489

Arizona
Phoenix
(602) 944-7900

Arkansas
Little Rock
(501) 661-9008

California
Fresno
(209) 264-5018
Los Angeles
(714) 979-6600
Sacramento
(916) 631-9433
San Diego
(619) 569-8015
San Francisco
(510) 429-1200
Stockton
(209) 478-9596

Colorado
Colorado Springs
(719) 473-7880
Denver
(303) 694-3770
Ft. Collins
(303) 223-2712

Connecticut
Wallingford
(203) 265-5003

Florida
Ft. Lauderdale
(305) 484-3888
Fort Myers
(813) 656-6605
Jacksonville
(904) 363-0087
Miami
(305) 592-4106
Orlando
(407) 894-7771
Tampa
(813) 287-2356
West Palm Beach
(407) 683-5185

Georgia
Atlanta
(404) 458-4353
Macon
(912) 743-8994
Savannah
(912) 354-5092

Hawaii
Honolulu
(808) 533-7135

Idaho
Boise
(208) 342-6852

Illinois
Chicago
(708) 330-4320
Peoria
(309) 688-8729

Indiana
Evansville
(812) 422-9176
Fort Wayne
(219) 483-6999
Indianapolis
(317) 788-5500
South Bend
(219) 232-6050

Iowa
Davenport
(319) 359-1357
Des Moines
(515) 280-1614

Kansas
Kansas City
(913) 491-3740
Wichita
(316) 942-1409

Kentucky
Louisville
(502) 426-4647

Louisiana
Baton Rouge
(504) 293-6874
New Orleans
(504) 837-8500
Shreveport
(318) 424-0720

Maine
Portland
(207) 854-0021

Maryland
Landover
(301) 459-2044

Massachusetts
Boston
(508) 658-0142
Springfield
(413) 562-7994
Worcester
(508) 792-4566

Michigan
Detroit
(313) 597-7400
Grand Rapids
(616) 247-7611

Minnesota
Edina
(612) 942-8888

Mississippi
Jackson
(601) 936-9360

Missouri
Kansas City
(913) 491-3740
St. Louis
(314) 567-3900
Sunrise Beach
(314) 374-2737

Nebraska
Omaha
(402) 397-1940

Nevada
Las Vegas
(702) 739-7900

New Hampshire
Manchester
(603) 626-0701

New Jersey
Union
(908) 687-7672

New Mexico
Albuquerque
(505) 881-1611

New York
Albany
(518) 482-0790
Buffalo
(716) 834-3815
Long Island
(516) 759-2325
New York (metro)
(212) 736-2640
Syracuse
(315) 453-3780

North Carolina
Charlotte
(704) 536-1201
Greensboro
(919) 852-1758
Raleigh
(919) 782-3365
Wilmington
(919) 763-1359

North Dakota
Bismarck
(701) 258-9555
Fargo
(701) 293-7709

Ohio
Cincinnati
(513) 891-8717
Cleveland
(216) 642-0701
Columbus
(614) 766-2204
Dayton
(513) 279-0458
Toledo
(419) 893-7197
Wooster
(216) 262-3268

Oklahoma
Oklahoma City
(405) 235-7515
Tulsa
(918) 665-1806

Oregon
Eugene
(503) 683-2111
Portland
(503) 635-6700

Pennsylvania
Philadelphia
(215) 646-3800
Pittsburgh
(412) 788-8060
York
(717) 854-9776

Rhode Island
Providence
(401) 943-6990

South Carolina
Columbia
(803) 254-7095
Greenville
(803) 288-3490

Tennessee
Chattanooga
(615) 267-7412
Johnson City
(615) 282-2718
Knoxville
(615) 690-5172
Memphis
(901) 761-2123
Nashville
(615) 367-9403

Texas
Austin
(512) 892-0278
Dallas
(214) 247-4481
Fort Worth
(817) 735-1947
Houston
(713) 690-3000
McAllen
(512) 687-2072
San Antonio
(512) 377-3292

Utah
Salt Lake City
(801) 266-9612

Virginia
Richmond
(804) 288-8311
Roanoke
(703) 982-2776
Virginia Beach
(804) 486-0174

Washington
Seattle
(206) 828-6600
Spokane
(509) 325-2582

Washington, D.C.
(301) 459-2044

Wisconsin
Green Bay
(414) 336-1144
Milwaukee
(414) 774-9500

Canada
Mississauga,
Ontario
(416) 564-1995
Pointe Claire,
Quebec
(514) 695-7300
Vancouver,
British Columbia
(604) 321-8687

International
TLX: 822024SEA
IBU UF
Fax: (404) 751-2496
Phone: (404) 751-2291

Bulletin SIB2.7-9 (New) 10M892SP Printed in U.S.A.

© 1992 Siemens Energy & Automation, Inc.
Siemens is a registered trademark of Siemens AG.

Courtesy of store.ips.us