SIEMENS

## Data sheet US2:CLM0C03120

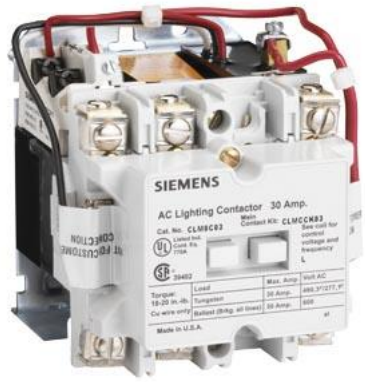


Figure similar

Mechanically held lighting contactor, Contactor amp rating 30A, 0 N.C. / 3 N.O. poles, 110VAC 50HZ/120VAC 60HZ coil, Non-combination type, Enclosure NEMA type (open), No enclosure

| | |
|---|---|
| product brand name | Class CLM |
| design of the product | Magnetically latched lighting contactor |
| special product feature | Energy efficient; Quiet operation |
| **General technical data** | |
| weight [lb] | 3 lb |
| Height x Width x Depth [in] | 4.53 × 3.43 × 4.78 in |
| touch protection against electrical shock | Not finger-safe |
| installation altitude [ft] at height above sea level maximum | 6560 ft |
| country of origin | USA |
| **Contactor** | |
| size of contactor | 30 Amp |
| number of NO contacts for main contacts | 3 |
| number of NC contacts for main contacts | 0 |
| operating voltage for main current circuit at AC at 60 Hz maximum | 600 V |
| mechanical service life (switching cycles) of the main contacts typical | 10000000 |
| contact rating of the main contacts of lighting contactor | |
| ● at tungsten (1 pole per 1 phase) rated value | 30A @277V 1p 1ph |
| ● at tungsten (2 poles per 1 phase) rated value | 30A @480V 2p 1ph |
| ● at tungsten (3 poles per 3 phases) rated value | 30A @480V 3p 3ph |
| ● at ballast (1 pole per 1 phase) rated value | 30A @347V 1p 1ph |
| ● at ballast (2 poles per 1 phase) rated value | 30A @600V 2p 1ph |
| ● at ballast (3 poles per 3 phases) rated value | 30A @600V 3p 3ph |
| ● at resistive load (1 pole per 1 phase) rated value | 30A @347V 1p 1ph |
| ● at resistive load (2 poles per 1 phase) rated value | 30A @600V 2p 1ph |
| ● at resistive load (3 poles per 3 phases) rated value | 30A @600V 3p 3ph |
| **Auxiliary contact** | |
| number of NC contacts for auxiliary contacts | 0 |
| number of NO contacts for auxiliary contacts | 0 |
| number of total auxiliary contacts maximum | 4 |
| contact rating of auxiliary contacts of contactor according to UL | NA |
| **Coil** | |
| type of voltage of the control supply voltage | AC |
| control supply voltage | |
| ● at AC at 50 Hz rated value | 110 V |
| ● at AC at 60 Hz rated value | 120 V |
| apparent pick-up power of magnet coil at AC | 410 V·A |


Subject to change without notice
© Copyright Siemens

| | |
|---|---|
| apparent holding power of magnet coil at AC | 40 V·A |
| operating range factor control supply voltage rated value of magnet coil | 0.85 ... 1.1 |
| **Enclosure** | |
| degree of protection NEMA rating of the enclosure | Open device (no enclosure) |
| design of the housing | NA |
| **Mounting/wiring** | |
| mounting position | Vertical |
| fastening method | Surface mounting and installation |
| type of electrical connection for supply voltage line-side | Screw-type terminals |
| tightening torque [lbf·in] for supply | 18 ... 20 lbf·in |
| type of connectable conductor cross-sections at line-side at AWG cables single or multi-stranded | 2x (14 ... 8 AWG) |
| temperature of the conductor for supply maximum permissible | 75 °C |
| material of the conductor for supply | CU |
| type of electrical connection for load-side outgoing feeder | Screw-type terminals |
| tightening torque [lbf·in] for load-side outgoing feeder | 18 ... 20 lbf·in |
| type of connectable conductor cross-sections at AWG cables for load-side outgoing feeder single or multi-stranded | 2x (14 ... 8 AWG) |
| temperature of the conductor for load-side outgoing feeder maximum permissible | 75 °C |
| material of the conductor for load-side outgoing feeder | CU |
| type of electrical connection of magnet coil | Screw-type terminals |
| tightening torque [lbf·in] at magnet coil | 8 ... 12 lbf·in |
| type of connectable conductor cross-sections of magnet coil at AWG cables single or multi-stranded | 2x (16 ... 12 AWG) |
| temperature of the conductor at magnet coil maximum permissible | 75 °C |
| material of the conductor at magnet coil | CU |
| **Short-circuit current rating** | |
| design of the fuse link for short-circuit protection of the main circuit required | none |
| design of the short-circuit trip | Thermal magnetic circuit breaker |
| breaking capacity maximum short-circuit current (Icu) | |
| • at 240 V | 5 kA |
| • at 480 V | 5 kA |
| • at 600 V | 5 kA |
| certificate of suitability | NEMA ICS 2; UL 508; CSA 22.2, No. 14 |

**Further information**

**Industrial Controls - Product Overview (Catalogs, Brochures,…)**
www.usa.siemens.com/iccatalog
**Industry Mall (Online ordering system)**
https://mall.industry.siemens.com/mall/en/us/Catalog/product?mlfb=US2:CLM0C03120
**Service&Support (Manuals, Certificates, Characteristics, FAQs,...)**
https://support.industry.siemens.com/cs/US/en/ps/US2:CLM0C03120
**Image database (product images, 2D dimension drawings, 3D models, device circuit diagrams, EPLAN macros, ...)**
http://www.automation.siemens.com/bilddb/cax_de.aspx?mlfb=US2:CLM0C03120&lang=en
**Certificates/approvals**
https://support.industry.siemens.com/cs/US/en/ps/US2:CLM0C03120/certificate

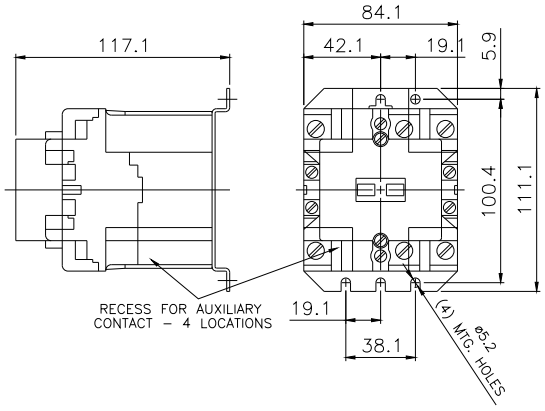



Subject to change without notice
© Copyright Siemens

Wiring Diagram Class CLM
30-200 Amp 2, 3, 4 and 5 Pole

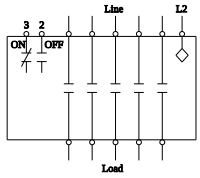


Notes:
1. Dotted lines represent additional poles.
   Contactor may have 2, 3, 4 or 5 poles.
2. Optional auxiliary contacts are not shown.

E87010-A0410-T009-A1-CLM-1

**last modified:** 4/27/2021


Subject to change without notice
© Copyright Siemens