SIEMENS



Edition 05/2024

EQUIPMENT MANUAL

SIMATIC

S7-1500

CPU 1512C-1 PN
6ES7512-1CM03-0AB0

support.industry.siemens.com

SIEMENS

SIMATIC

S7-1500
CPU 1512C-1 PN
(6ES7512-1CM03-0AB0)

Equipment Manual

Introduction 1

Industrial cybersecurity 2

Product overview 3

Technology functions 4

Wiring 5

Parameters/address space 6

Interrupts/diagnostics alarms 7

Technical specifications 8

Dimension drawings A

Parameter data records B

Analog value processing C

05/2024
A5E40898741-AC

Legal information

Warning notice system

This manual contains notices you have to observe in order to ensure your personal safety, as well as to prevent damage to property. The notices referring to your personal safety are highlighted in the manual by a safety alert symbol, notices referring only to property damage have no safety alert symbol. These notices shown below are graded according to the degree of danger.

⚠ DANGER

indicates that death or severe personal injury **will** result if proper precautions are not taken.

⚠ WARNING

indicates that death or severe personal injury **may** result if proper precautions are not taken.

⚠ CAUTION

indicates that minor personal injury can result if proper precautions are not taken.

NOTICE

indicates that property damage can result if proper precautions are not taken.

If more than one degree of danger is present, the warning notice representing the highest degree of danger will be used. A notice warning of injury to persons with a safety alert symbol may also include a warning relating to property damage.

Qualified Personnel

The product/system described in this documentation may be operated only by **personnel qualified** for the specific task in accordance with the relevant documentation, in particular its warning notices and safety instructions. Qualified personnel are those who, based on their training and experience, are capable of identifying risks and avoiding potential hazards when working with these products/systems.

Proper use of Siemens products

Note the following:

⚠ WARNING

Siemens products may only be used for the applications described in the catalog and in the relevant technical documentation. If products and components from other manufacturers are used, these must be recommended or approved by Siemens. Proper transport, storage, installation, assembly, commissioning, operation and maintenance are required to ensure that the products operate safely and without any problems. The permissible ambient conditions must be complied with. The information in the relevant documentation must be observed.

Trademarks

All names identified by ® are registered trademarks of Siemens Aktiengesellschaft. The remaining trademarks in this publication may be trademarks whose use by third parties for their own purposes could violate the rights of the owner.

Disclaimer of Liability

We have reviewed the contents of this publication to ensure consistency with the hardware and software described. Since variance cannot be precluded entirely, we cannot guarantee full consistency. However, the information in this publication is reviewed regularly and any necessary corrections are included in subsequent editions.

Siemens Aktiengesellschaft
Digital Industries
Postfach 48 48
90026 NÜRNBERG
GERMANY

A5E40898741-AC
Ⓟ 03/2024 Subject to change

Copyright © Siemens 2017 - 2024.
All rights reserved

Table of contents

1 Introduction 7

1.1 Guide documentation S7-1500/ET 200MP 8
1.1.1 Information classes S7-1500/ET 200MP 8
1.1.2 SIMATIC Technical Documentation 10

2 Industrial cybersecurity 12

2.1 Introduction to industrial cybersecurity 12
2.2 Cybersecurity information 12
2.3 Cybersecurity-relevant information 13

3 Product overview 15

3.1 New functions 15
3.2 Application 17
3.3 Hardware properties and firmware functions 24
3.3.1 Hardware properties of the CPU part 25
3.3.2 Firmware functions of the CPU part 26
3.3.3 Hardware properties of the analog on-board I/O module 30
3.3.4 Firmware functions of the analog on-board I/O module 32
3.3.5 Hardware properties of the digital on-board I/O module 33
3.3.6 Firmware functions of the digital on-board I/O module 35
3.4 Operator controls and display elements 36
3.4.1 Front view with closed front panel 36
3.4.2 Front view of the CPU without front panel and view from below 38
3.4.3 Rear view 40
3.5 Operating mode buttons 40

4 Technology functions 42

4.1 High-speed counters 42
4.1.1 Functions 43
4.1.1.1 Counting 43
4.1.1.2 Measuring 44
4.1.1.3 Position detection for motion control 45
4.1.1.4 Additional functions 46
4.1.2 Configuring the high-speed counters 47
4.1.2.1 General 47
4.1.2.2 Assignment of the control interface of the high-speed counters 47
4.1.2.3 Assignment of the feedback interface of the high-speed counters 49
4.2 Pulse generators 50
4.2.1 Operating modes 50

4.2.1.1 Operating mode: Pulse-width modulation (PWM) 50
4.2.1.2 Operating mode: Frequency output 57
4.2.1.3 Operating mode: PTO 61
4.2.2 Functions 66
4.2.2.1 Function: High-speed output 66
4.2.2.2 Function: Direct control of the pulse output (DQA) 66
4.2.3 Configuring the PWM and frequency output modes 67
4.2.3.1 Assignment of the control interface 67
4.2.3.2 Handling the SLOT parameter (control interface) 69
4.2.3.3 Assignment of the feedback interface 72

5 Wiring 74

5.1 Supply voltage 74
5.2 PROFINET interfaces 75
5.3 Terminal and block diagrams 77
5.3.1 Block diagram of the CPU part 77
5.3.2 Terminal and block diagram of the analog on-board I/O 78
5.3.3 Terminal and block diagram of the digital on-board I/O 87
5.3.4 Addresses of the high-speed counters 102
5.3.5 Addresses of the pulse generators in the Pulse Width Modulation (PWM) and Frequency Output modes 105
5.3.6 Addresses of pulse generators in the PTO mode 105
5.3.7 Interconnection overview of the inputs 106
5.3.8 Interconnection overview of outputs 108

6 Parameters/address space 111

6.1 Address space of the analog on-board I/O 111
6.2 Address space of the digital on-board I/O 113
6.3 Address space of the pulse generators 115
6.4 Measurement types and measuring ranges of the analog on-board I/O 116
6.5 Output type and output ranges of the analog on-board I/O 117
6.6 Parameters of the analog on-board I/O 118
6.7 Parameters of the digital on-board I/O 120

7 Interrupts/diagnostics alarms 122

7.1 Status and error displays 122
7.1.1 Status and error displays of the CPU part 122
7.1.2 Status and error displays of the analog on-board I/O 125
7.1.3 Status and error displays of the digital on-board I/O 127
7.2 Interrupts and diagnostics 129
7.2.1 Interrupts and diagnostics of the CPU part 129
7.2.2 Interrupts and diagnostics of the analog on-board I/O 129
7.2.3 Interrupts and diagnostics of the digital on-board I/O 132

8 Technical specifications 135

A Dimension drawings 159

B Parameter data records ... 160

B.1 Parameter assignment and structure of the parameter data records of the analog on-board I/O ... 160

B.2 Structure of a data record for input channels of the analog on-board I/O ... 161

B.3 Structure of a data record for output channels of the analog on-board I/O ... 167

B.4 Parameter assignment and structure of the parameter data records of the digital on-board I/O ... 170

B.5 Structure of a data record for input channels of the digital on-board I/O ... 170

B.6 Structure of a data record for output channels of the digital on-board I/O ... 171

B.7 Parameter data records of the high-speed counters ... 173

B.8 Parameter data records (PWM) ... 179

C Analog value processing ... 182

C.1 Conversion method ... 182

C.2 Representation of analog values ... 187

C.3 Representation of input ranges ... 188

C.3.1 Representation of analog values in voltage measuring ranges ... 189

C.3.2 Representation of analog values in current measuring ranges ... 190

C.3.3 Representation of the analog values of resistance-type sensors/resistance-type thermometers ... 191

C.3.4 Measured values for wire break diagnostics ... 192

C.4 Representation of output ranges ... 193

C.4.1 Representation of analog values in the voltage output ranges ... 194

C.4.2 Representation of analog values in the current output ranges ... 195

Introduction

1

Purpose of the documentation

This manual supplements the system manual of the S7-1500 automation system/ET 200MP distributed I/O system as well as the function manuals. This manual contains a description of the module-specific information. The system-related functions are described in the system manual. All system-spanning functions are described in the function manuals.

The information provided in this equipment manual and the system manual enables you to commission the CPU .

Conventions

STEP 7: In this documentation, "STEP 7" is used as a synonym for all versions of the configuration and programming software "STEP 7 (TIA Portal)".

Please also observe notes marked as follows:

NOTE

A note contains important information on the product described in the documentation, on the handling of the product or on the section of the documentation to which particular attention should be paid.

Recycling and disposal

For environmentally friendly recycling and disposal of your old equipment, contact a certified electronic waste disposal company and dispose of the equipment according to the applicable regulations in your country.

Industry Mall

The Industry Mall is the catalog and order system of Siemens AG for automation and drive solutions on the basis of Totally Integrated Automation (TIA) and Totally Integrated Power (TIP).

You can find catalogs for all automation and drive products on the Internet (https://mall.industry.siemens.com).

ID-Link for the digital nameplate

The ID-Link is a globally unique identifier according to IEC 61406-1, which you will find in the future as a QR code on your product.

The figure shows an example of an ID-Link for the CPU 1512C-1 PN.

You can recognize the ID-Link by the frame with a black corner at the bottom right. The ID-Link takes you to the digital nameplate of your product.

Scan the QR code on the product or on the packaging label with a smartphone camera, barcode scanner, or reader app. Call the ID-Link.

In the digital nameplate, you will find product data, manuals, declarations of conformity, certificates, and other helpful information about your product.

1.1 Guide documentation S7-1500/ET 200MP

1.1.1 Information classes S7-1500/ET 200MP



The documentation for the SIMATIC S7-1500 automation system and the ET 200MP distributed I/O system is arranged into three areas.

This arrangement enables you to access the specific content you require. Changes and supplements to the manuals are documented in a Product Information.

You can download the documentation free of charge from the Internet (https://support.industry.siemens.com/cs/ww/en/view/109742691).

Basic information



The System Manual and Getting Started describe in detail the configuration, installation, wiring and commissioning of the SIMATIC S7-1500 and ET 200MP systems.

The STEP 7 online help supports you in the configuration and programming.

Examples:

- Getting Started S7-1500
- S7-1500/ET 200MP System Manual
- Online help TIA Portal

Device information



Equipment manuals contain a compact description of the module-specific information, such as properties, wiring diagrams, characteristics and technical specifications.
Examples:

- Equipment Manuals CPUs
- Equipment Manuals Interface Modules
- Equipment Manuals Digital Modules
- Equipment Manuals Analog Modules
- Equipment Manuals Communications Modules
- Equipment Manuals Technology Modules
- Equipment Manuals Power Supply Modules

General information



The function manuals contain detailed descriptions on general topics relating to the SIMATIC S7-1500 and ET 200MPsystems.
Examples:

- Function Manual Diagnostics
- Function Manual Communication
- Function Manual Motion Control
- Function Manual Web Server
- Function Manual Cycle and Response Times
- PROFINET Function Manual
- PROFIBUS Function Manual

Product Information

Changes and supplements to the manuals are documented in a Product Information. The Product Information takes precedence over the device and system manuals.
You can find the latest Product Information on the S7-1500 and ET 200MP systems on the Internet (https://support.industry.siemens.com/cs/de/en/view/68052815).

Manual Collection S7-1500/ET 200MP

The Manual Collection contains the complete documentation on the SIMATIC S7-1500 automation system and the ET 200MP distributed I/O system gathered together in one file.
You can find the Manual Collection on the Internet.
(https://support.industry.siemens.com/cs/ww/en/view/86140384)

Manual Collection fail-safe modules

The Manual Collection contains the complete documentation on the fail-safe SIMATIC modules, gathered together in one file.
You can find the Manual Collection on the Internet.
(https://support.industry.siemens.com/cs/de/en/view/109806400)

SIMATIC S7-1500 comparison list for programming languages

The comparison list contains an overview of which instructions and functions you can use for which controller families.
You can find the comparison list on the Internet (https://support.industry.siemens.com/cs/ww/en/view/86630375).

1.1.2 SIMATIC Technical Documentation

Additional SIMATIC documents will complete your information. You can find these documents and their use at the following links and QR codes.
The Industry Online Support gives you the option to get information on all topics. Application examples support you in solving your automation tasks.

Overview of the SIMATIC Technical Documentation

Here you will find an overview of the SIMATIC documentation available in Siemens Industry Online Support:

Industry Online Support International (https://support.industry.siemens.com/cs/ww/en/view/109742705)

Watch this short video to find out where you can find the overview directly in Siemens Industry Online Support and how to use Siemens Industry Online Support on your mobile device:

Quick introduction to the technical documentation of automation products per video (https://support.industry.siemens.com/cs/us/en/view/109780491)

YouTube video: Siemens Automation Products - Technical Documentation at a Glance (https://youtu.be/TwLSxxRQQsA)

Retention of the documentation

Retain the documentation for later use.
For documentation provided in digital form:

1. Download the associated documentation after receiving your product and before initial installation/commissioning. Use the following download options:
   – Industry Online Support International: (https://support.industry.siemens.com)
     The article number is used to assign the documentation to the product. The article number is specified on the product and on the packaging label. Products with new, non-compatible functions are provided with a new article number and documentation.
   – ID link:
     Your product may have an ID link. The ID link is a QR code with a frame and a black frame corner at the bottom right. The ID link takes you to the digital nameplate of your product. Scan the QR code on the product or on the packaging label with a smartphone camera, barcode scanner, or reader app. Call up the ID link.

2. Retain this version of the documentation.

Updating the documentation

The documentation of the product is updated in digital form. In particular in the case of function extensions, the new performance features are provided in an updated version.

1. Download the current version as described above via the Industry Online Support or the ID link.
2. Also retain this version of the documentation.

mySupport

With "mySupport" you can get the most out of your Industry Online Support.

Registration	You must register once to use the full functionality of "mySupport". After registration, you can create filters, favorites and tabs in your personal workspace.
Support requests	Your data is already filled out in support requests, and you can get an overview of your current requests at any time.
Documentation	In the Documentation area you can build your personal library.
Favorites	You can use the "Add to mySupport favorites" to flag especially interesting or frequently needed content. Under "Favorites", you will find a list of your flagged entries.
Recently viewed articles	The most recently viewed pages in mySupport are available under "Recently viewed articles".
CAx data	The CAx data area gives you access to the latest product data for your CAx or CAe system. You configure your own download package with a few clicks: • Product images, 2D dimension drawings, 3D models, internal circuit diagrams, EPLAN macro files • Manuals, characteristics, operating manuals, certificates • Product master data

You can find "mySupport" on the Internet. (https://support.industry.siemens.com/My/ww/en)

Application examples

The application examples support you with various tools and examples for solving your automation tasks. Solutions are shown in interplay with multiple components in the system - separated from the focus on individual products.
You can find the application examples on the Internet.
(https://support.industry.siemens.com/cs/ww/en/ps/ae)

Industrial cybersecurity 2

2.1 Introduction to industrial cybersecurity

Due to the digitalization and increasing networking of machines and industrial plants, the risk of cyber attacks is also growing. Appropriate protective measures are therefore mandatory, particularly in the case of critical infrastructure facilities.

Refer to the System Manual (https://support.industry.siemens.com/cs/us/en/view/59191792) for general information and measures regarding industrial cybersecurity.

This section provides an overview of security-related information pertaining to your SIMATIC device.

NOTE

Security-relevant changes to software or devices are documented in the section "New functions (Page 15)".

2.2 Cybersecurity information

Siemens provides products and solutions with industrial cybersecurity functions that support the secure operation of plants, systems, machines, and networks.

In order to protect plants, systems, machines, and networks against cyber threats, it is necessary to implement – and continuously maintain – a holistic, state-of-the-art industrial cybersecurity concept. Siemens' products and solutions constitute one element of such a concept.

Customers are responsible for preventing unauthorized access to their plants, systems, machines and networks. Such systems, machines and components should only be connected to an enterprise network or the internet if and to the extent such a connection is necessary and only when appropriate security measures (e.g. firewalls and/or network segmentation) are in place.

For more information on protective industrial cybersecurity measures for implementation, please visit (https://www.siemens.com/global/en/products/automation/topic-areas/industrial-cybersecurity.html).

Siemens' products and solutions undergo continuous development to make them more secure. Siemens strongly recommends that product updates are applied as soon as they are available and that the latest product versions are used. Use of product versions that are no longer supported, and failure to apply the latest updates may increase customers' exposure to cyber threats.

To stay informed about product updates at all times, subscribe to the Siemens Industrial Cybersecurity RSS Feed under (https://new.siemens.com/global/en/products/services/cert.html).

2.3 Cybersecurity-relevant information

Note all cybersecurity-relevant information.

Topics with cybersecurity-relevant information	Reference
Operational application environment and security assumptions	
Requirements for the operational application environment of the system and security assumptions	This section is found in the System Manual (https://support.industry.siemens.com/cs/us/en/view/59191792).
Area of application	You can find the section Area of application (Page 17) in this Equipment Manual.
Security properties of the product	
Access protection Physical protection: • You can protect the CPU against unauthorized access by locking the front flap. Password protection You can also protect the CPU with a password. Password categories: • Password to protect confidential configuration data • Password in the context of user management (UMAC) • Password for display	Information on locking and on password protection can be found in this Equipment Manual in the section Operator controls and display elements (Page 36). Also note the information on the topic of access protection in the Protection section of the System Manual (https://support.industry.siemens.com/cs/us/en/view/59191792).
Integrated protection functions • The CPUs have integrated protection functions.	For information on the protection functions, refer to the "Overview of protection functions" section of the System Manual (https://support.industry.siemens.com/cs/us/en/view/59191792).
PROFINET Security Class 1 • The device supports PROFINET Security Class 1. • With the introduction of PROFINET Security Class 1, additional security settings have been integrated into the PROFINET communication.	Detailed information about PROFINET Security Class 1 and the additional security settings can be found in the PROFINET with STEP 7 Function Manual (https://support.industry.siemens.com/cs/us/en/view/49948856).
Reading out and verifying signatures	You can find detailed information on reading and verifying signatures in the STEP 7 online help (TIA Portal).
Supported Ethernet services	Information about supported services can be found in the section Technical specifications (Page 135). You can find detailed information on the supported Ethernet services in the Communication Function Manual (https://support.industry.siemens.com/cs/us/en/view/59192925).
Interfaces, ports, protocols and services	
Information on the following is security related: • Communications layer and communication role • Default states • Enabling/disabling ports and services	You can find detailed information on these topics in the Communication Function Manual (https://support.industry.siemens.com/cs/us/en/view/59192925).
Secure operation	

Topics with cybersecurity-relevant information	Reference
Corrective measures for known risks	Corrective measures for known risks are announced on the Siemens ProductCERT (https://siemens.com/productcert) Web page. For more information on SIEMENS ProductCERT, refer to the System Manual (https://support.industry.siemens.com/cs/us/en/view/59191792).
Security checks	Application-specific security measures such as cyclic checks of the configuration via checksums are described in the System Manual (https://support.industry.siemens.com/cs/us/en/view/59191792).
Recording Security events	Information on recording security events can be found in the "Safe operation of CPUs" section of the System Manual (https://support.industry.siemens.com/cs/us/en/view/59191792).
Secure decommissioning Products that contain security-relevant data must be securely decommissioned before disposal or resale.	Information on secure decommissioning can be found in the "Safe operation of the system" section of the System Manual (https://support.industry.siemens.com/cs/us/en/view/59191792).

Product overview

3

3.1 New functions

This section contains an overview of the most important new firmware functions of the CPU compared with the predecessor version CPU.

New functions of the CPU in firmware version V3.1

New functions	Applications	Customer benefits
Integrated safety		
Syslog messages	The CPU stores syslog messages in a local cache (temporary memory). The messages can be forwarded to a syslog server.	The syslog server saves all syslog messages from its connected devices. The messages can be displayed on the user interface of the server and potential security risks can be identified.
Local user management	As of TIA Portal version V19 and FW version V3.1, the CPUs feature improved management of users, roles and CPU function rights (User Management & Access Control, UMAC). Starting with the above mentioned version, you can manage all project users with their rights (e.g. access rights) for all CPUs in the project. Management is performed in the editor for users and roles in TIA Portal.	Project users can be managed via the TIA Portal with their rights (for example, access rights) for all CPUs in the project in the editor for users and roles.
Communication of the CPU		
Implementation of PROFINET Security Class 1	As of V19, STEP 7 offers extended configuration options for the SNMP and DCP protocols in order to meet the requirements for PROFINET Security Class 1.	Additional protection of communication within your PROFINET network.
Project-internal shared device/shared I-device	As of STEP7 V19, a shared device/shared I-device can be created together with a maximum of 2 IO controllers in a project. Previously it was mandatory for the second IO controller to have its own project.	Simpler configuration
Handling timeouts while exchanging data	In the event of high network loads, timeouts can occur in data record communication with PROFINET IO devices. In the past this resulted in the PROFINET IO communication being terminated by the CPU. As of STEP 7 V19 and FW version V3.1, you can configure the behavior of the respective PROFINET interface.	PROFINET IO communication is maintained even under high grid loads
Web server of the CPU		
New Web API methods	Many new API methods extend your access options to the CPU via the Web API.	Additional Web server applications
Technology functions of the CPU		

New functions	Applications	Customer benefits
Axis functions	Measuring gearbox for positioning/synchronous axis	Extended configuration options
	Torque feedforward control for positioning/synchronous axis. The torque feedforward control of the CPU controls the required torque for acceleration of the axis, taking into account the motion profile.	Complex motion sequences can be performed faster and more precisely. This results in a reduction of the tracking error during acceleration phases.
	Three drive stop modes can be configured for the "Remove enable" alarm response.	You choose between a deceleration ramp, coasting down, and rapid stop.
	Dynamic filter with floating mean	The new "Floating mean value filter" mode is available for the dynamic filter.
	Standstill signal on external encoder	The standstill signal is also available for external encoders. The standstill signal is output if the encoder values are in a defined standstill window.
	Virtual axis	The axis is operated in virtual mode with improved runtime behavior. The new mode replaces the existing behavior of the virtual axis.
Measuring input functions	Monitoring measuring input	Using the measuring input type "Measuring via listening", the measuring input can acquire the measured signal of another configured measuring input.
	Cyclic measuring for central measuring input	Cyclic measuring possible without additional technology module
Trace functionality of the CPU		
Live monitoring for the long-term trace	With the live monitoring function for the long-term trace you can: • Display and analyze the values directly in the graph during recording • Use superimposed measurements for the long-term trace • Synchronize time bases	Improved display and analysis of long-term traces
Long-term project trace	With the long-term project trace, you can record signals from different CPUs simultaneously. The CPUs must be configured in a network. The recording is stored on a drive that you have configured.	Extended scope of functions

Reference

You can find an overview of all new functions, improvements, and revisions in the respective firmware versions on the Internet (https://support.industry.siemens.com/cs/ww/en/view/109478459).

3.2 Application

SIMATIC S7-1500 is the modular control system for a wide variety of automation applications in discrete automation.

SIMATIC S7-1500 is the cost-effective and convenient solution for a broad range of tasks and offers the following advantages:

- Modular, fanless design
- Simple realization of distributed structures
- User-friendly handling

Areas of application of the SIMATIC S7-1500 automation system include, for example:

- Special-purpose machines
- Textile machinery
- Packaging machines
- General mechanical engineering
- Controller engineering
- Machine tool engineering
- Installation engineering
- Electrical industry and crafts
- Automobile engineering
- Water/waste water
- Food & Beverage

Areas of application of the SIMATIC S7-1500R/H redundant system include, for example:

- Tunnels
- Airports (e.g. baggage conveyors)
- Subways
- Shipbuilding
- Wastewater treatment plants
- High-bay warehouses

Areas of application of the SIMATIC S7-1500T automation system for advanced motion control applications include, for example:

- Packaging machines
- Converting applications
- Assembly automation
- Pick-and-place automation
- Palletizers

Several CPUs with various levels of performance and a comprehensive range of modules with many convenient features are available. Fail-safe CPUs enable use in fail-safe applications. The modular design allows you to use only those modules that you need for your application. The controller can be retrofitted with additional modules at any time to expand its range of tasks.

High industrial suitability due to the high resistance to EMC, shock and vibration enable universal use of the SIMATIC S7-1500, S7-1500R/H and S7-1500T automation systems.

Performance segments of standard CPUs

The CPUs can be used for smaller and mid-range applications, as well as for the high-end range of machine and plant automation.

Table 3-1 Standard CPUs

CPU	Performance segment	PROFIBUS interfaces	PROFINET IO RT/IRT interfaces	PROFINET IO RT interface	Basic PROFINET functionality	Work memory	Processing time for bit operations
CPU 1511-1 PN	Standard CPU for small to mid-range applications	--	1	--	--	1.8 MB	25 ns
CPU 1513-1 PN	Standard CPU for mid-range applications	--	1	--	--	3.1 MB	25 ns
CPU 1515-2 PN	Standard CPU for mid-range to large applications	--	1	1	--	5.5 MB	6 ns
CPU 1516-3 PN/DP	Standard CPU for demanding applications and communication tasks	1	1	1	--	9.5 MB	6 ns
CPU 1517-3 PN/DP	Standard CPU for demanding applications and communication tasks	1	1	1	--	10 MB	2 ns
CPU 1518-4 PN/DP	Standard CPU for high-performance applications, demanding communication tasks and very short reaction times	1	1	1	1	66 MB	1 ns
CPU 1518-4 PN/DP MFP	Standard CPU for high-performance applications, demanding communication tasks, very short reaction times and C/C++ blocks for the user program	1	1	1	1	116* MB	1 ns

* 50 MB of the integrated work memory is reserved for the function library of CPU runtime

Performance segments of redundant CPUs

The CPUs of the S7-1500R/H redundant system offer a high degree of reliability and system availability. A redundant configuration of the most important automation components reduces the likelihood of production downtimes and the consequences of component errors. The higher the risks and costs of a production downtime, the more worthwhile the use of a redundant system. The avoidance of production downtimes compensates for the generally higher investment costs.

Table 3-2 Redundant CPUs

CPU	Performance segment	PROFIBUS interfaces	PROFINET IO RT/IRT interfaces	PROFINET IO RT interface	Basic PROFINET functionality	Work memory	Processing time for bit operations
CPU 1513R-1 PN	Redundant CPU for smaller to mid-range applications	--	1	--	--	3.1 MB	50 ns
CPU 1515R-2 PN	Redundant CPU for mid-range to large applications	--	1	--	1	5.5 MB	20 ns
CPU 1517H-3 PN	Redundant CPU for demanding applications and communication tasks	--	1	--	1	10 MB	4 ns
CPU 1518HF--4 PN	Fail-safe and redundant CPU for demanding applications and communication tasks	--	1	--	2	69 MB	4 ns

Performance segments of compact CPUs

The compact CPUs can be used for smaller to mid-range applications and have an integrated analog and digital on-board I/O as well as integrated technology functions.

Table 3-3 Compact CPUs

CPU	Performance segment	PROFIBUS interfaces	PROFINET IO RT/IRT interfaces	PROFINET IO RT interface	Basic PROFINET functionality	Work memory	Processing time for bit operations
CPU 1511C-1 PN	Compact CPU for small to mid-range applications	--	1	--	--	1.8 MB	25 ns
CPU 1512C-1 PN	Compact CPU for mid-range applications	--	1	--	--	2.4 MB	25 ns

The following table shows the specific properties of the Compact CPUs.

	CPU 1511C-1 PN	CPU 1512C-1 PN
Integrated analog inputs/outputs	5 inputs/2 outputs	5 inputs/2 outputs
Integrated digital inputs/outputs	16 inputs/16 outputs	32 inputs/32 outputs
High-speed counters	6	6
Frequency meters	6 (max. 100 kHz)	6 (max. 100 kHz)
Period duration measurement	6 channels	6 channels

	CPU 1511C-1 PN	CPU 1512C-1 PN
Pulse width modulation (PWM output)	Max. 4 (up to 100 kHz)	Max. 4 (up to 100 kHz)
Pulse Train Output (PTO output)	Max. 4 (up to 100 kHz)	Max. 4 (up to 100 kHz)
Frequency output	Up to 100 kHz	Up to 100 kHz

Performance segments of technology CPUs

The technology CPUs can be used for low and mid-range applications, as well as for the high-end range of machine and plant automation. Because of their extended motion control functions, they are primarily used for drive control.

Table 3-4 Technology CPUs

CPU	Performance segment	PROFIBUS interfaces	PROFINET IO RT/IRT interfaces	PROFINET IO RT interface	Basic PROFINET functionality	Work memory	Processing time for bit operations
CPU 1511T-1 PN	Technology CPU for small to mid-range applications	--	1	--	--	1.95 MB	25 ns
CPU 1515T-2 PN	Technology CPU for mid-range to large applications	--	1	1	--	6 MB	6 ns
CPU 1516T-3 PN/DP	Technology CPU for high-end applications and communication tasks	1	1	1	--	10.5 MB	6 ns
CPU 1517T-3 PN/DP	Technology CPU for high-end applications and communication tasks	1	1	1	--	11 MB	2 ns
CPU 1518T-4 PN/DP	Technology CPU for high-performance motion control applications with large quantities, demanding communication tasks and very short reaction times	1	1	1	1	69 MB	1 ns
CPU 1511TF-1 PN CPU 1515TF-2 PN CPU 1516TF-3 PN/DP CPU 1517TF-3 PN/DP CPU 1518TF-4 PN/DP	These CPUs are described in the fail-safe CPUs.						

Performance segments of fail-safe CPUs

The fail-safe CPUs are intended for users who want to implement demanding standard and fail-safe applications both centrally and decentrally.

These fail-safe CPUs allow the processing of standard and safety programs on a single CPU. This allows fail-safe data to be evaluated in the standard user program. The integration also provides the system advantages and the extensive functionality of SIMATIC for fail-safe applications.

The fail-safe CPUs are certified for use in safety mode up to:

- Safety class (Safety Integrity Level) SIL 3 according to IEC 61508:2010
- Performance Level (PL) e and Category 4 according to ISO 13849-1:2015 or EN ISO 13849-1:2015

For IT security, local user management can be used to individually restrict F-Configuration and F-Program access for users.

Table 3-5 Fail-safe CPUs

CPU	Performance segment	PROFIBUS interfaces	PROFINET IO RT/IRT interfaces	PROFINET IO RT interface	Basic PROFINET functionality	Work memory	Processing time for bit operations
CPU 1511F-1 PN	Fail-safe CPU for small to mid-range applications	--	1	--	--	1.95 MB	25 ns
CPU 1511TF-1 PN	Fail-safe technology CPU for small to mid-range applications	--	1	--	--	1.95 MB	25 ns
CPU 1513F-1 PN	Fail-safe CPU for mid-range applications	--	1	--	--	3.4 MB	25 ns
CPU 1515F-2 PN	Fail-safe CPU for mid-range to large applications	--	1	1	--	6 MB	6 ns
CPU 1515TF-2 PN	Fail-safe technology CPU for high-end applications and communication tasks	--	1	1	--	6 MB	6 ns
CPU 1516F-3 PN/DP	Fail-safe CPU for demanding applications and communication tasks	1	1	1	--	10.5 MB	6 ns
CPU 1516TF-3 PN/DP	Fail-safe technology CPU for high-end applications and communication tasks	1	1	1	--	10.5 MB	6 ns
CPU 1517F-3 PN/DP	Fail-safe CPU for demanding applications and communication tasks	1	1	1	--	11 MB	2 ns
CPU 1517TF-3 PN/DP	Fail-safe technology CPU for high-end applications and communication tasks	1	1	1	--	11 MB	2 ns

* 50 MB of the integrated work memory is reserved for the function library of CPU runtime

CPU	Performance segment	PROFIBUS interfaces	PROFINET IO RT/IRT interfaces	PROFINET IO RT interface	Basic PROFINET functionality	Work memory	Processing time for bit operations
CPU 1518F-4 PN/DP	Fail-safe CPU for high-performance applications, demanding communication tasks and very short reaction times	1	1	1	1	69 MB	1 ns
CPU 1518F-4 PN/DP MFP	Fail-safe CPU for high-performance applications, demanding communication tasks, very short reaction times and C/C++ blocks for the user program	1	1	1	1	119* MB	1 ns
CPU 1518TF-4 PN/DP	Technology CPU for high-performance motion control applications with large quantities, demanding communication tasks and very short reaction times	1	1	1	1	69 MB	1 ns

* 50 MB of the integrated work memory is reserved for the function library of CPU runtime

In addition to the CPUs, further components such as SINAMICS drives dispose of integrated safety functions. Additional information about integrated safety functions in drives can be found in the manuals for the respective products.

Security Integrated

In conjunction with STEP 7, each CPU offers password-based know-how protection against unauthorized reading out or modification of the program blocks.

Copy protection provides reliable protection against unauthorized reproduction of program blocks. With copy protection, individual blocks on the SIMATIC Memory Card are linked to its serial number so that the block can only be executed if the configured memory card is inserted in the CPU.

In addition, all project users can be managed via the local user management. Rights such as access rights can be set individually for each user.

Improved manipulation protection allows changed or unauthorized transfers of engineering data to be detected by the controller.

The use of an Ethernet CP (CP 1543-1) provides you with additional access protection through a firewall or possibilities to establish secure VPN connections.

Design and handling

All CPUs of the SIMATIC S7-1500 product series feature a display with plain text information. The display provides information on order numbers, firmware versions, and serial numbers of all connected modules. Additionally the IP address of the CPU and other network settings can be set directly on site, without a programming device. Error messages are shown on the display directly in plain text. When performing servicing, you can minimize plant downtimes by quickly accessing the diagnostics alarms. Detailed information about this and a multitude of other display functions is available in the SIMATIC S7-1500 Display Simulator (https://support.industry.siemens.com/cs/ww/en/view/109761758).

Uniform front connectors for all modules and integrated potential jumpers for flexible formation of potential groups simplify storage. Additional components such as circuit breakers, relays, etc., can be installed quickly and easily, since a DIN rail is implemented in the rail of the SIMATIC S7-1500. The CPUs of the SIMATIC S7-1500 product series can be expanded centrally and in a modular fashion with signal modules. Space-saving expansion enables flexible adaptation to each application.

The system cabling for digital signal modules enables fast and clear connection to sensors and actuators from the field (fully modular connection consisting of front connector modules, connection cables and I/O modules), as well as easy wiring inside the control cabinet (flexible connection consisting of front connectors with assembled single conductors).

System diagnostics and alarms

Integrated system diagnostics is activated by default for the CPUs. The different types of diagnostics are configured instead of programmed. System diagnostics information and alarms from the drives are displayed consistently and in plain text:

- On the CPU display
- In STEP 7
- On the HMI
- On the Web server

This information is available in RUN mode, but also in STOP mode of the CPU. The diagnostic information is updated automatically when you configure new hardware components.

The CPU is available as a central interrupt server in up to three project languages. The HMI takes over the display in the project languages defined for the CPU. If you require alarm texts in additional languages, you can load them into your HMI via the configured connection. The CPU, STEP 7 and their HMI ensure data consistency without additional engineering steps. The maintenance work is easier.

3.3 Hardware properties and firmware functions

The CPU 1512C-1 PN consists of a CPU part, an analog on-board I/O module (X10) and a digital on-board I/O module (X11 and X12). When configured in the TIA Portal, the compact CPU therefore occupies a single shared slot (slot 1).

The properties and functions of the CPU part and the analog and digital on-board I/O modules can be found in the subsections below. The **properties** describe the hardware features of the CPU part and the analog and digital on-board I/O modules. The **functions** describe the functions of the firmware of the CPU part and the analog and digital on-board I/O modules.

Article number

6ES7512-1CM03-0AB0

Accessories

The following accessories are included in the scope of delivery and can also be ordered separately as spare parts:

- 3 x front connector (push-in terminals) including cable ties
- 3 x shield clamp
- 3 x shield terminal
- 3 x infeed element (push-in terminals)
- 3 x labeling strip
- 3 x universal front flap

For more information on accessories, refer to the S7-1500, ET 200MP System Manual (http://support.automation.siemens.com/WW/view/en/59191792).

3.3.1 Hardware properties of the CPU part

View of the CPU

The figure below shows the CPU part of the CPU 1512C-1 PN.

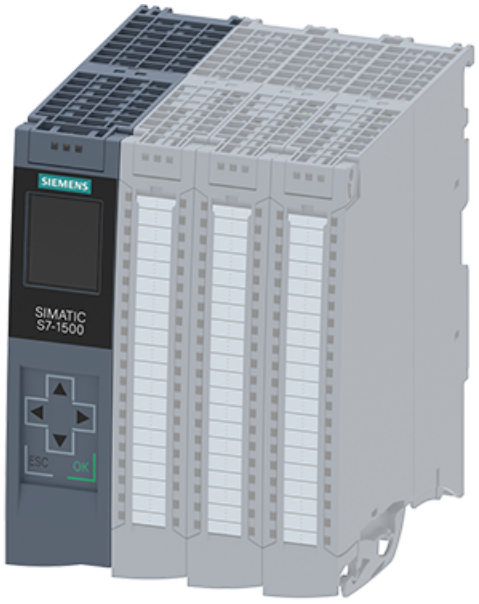

Figure 3-1 CPU 1512C-1 PN

NOTE

Protective film

Note that a protective film is attached to the display of the CPU when shipped from the factory. Remove the protective film if necessary.

Properties

The CPU 1512C-1 PN has the following technical properties:

Property	Description	Additional information
CPU display	All CPUs of the SIMATIC S7-1500 product series feature a display with plain text information. The display of the CPU 1512C-1 PN provides information on the order numbers, firmware version, and serial numbers of all connected modules. In addition, you can set the IP address of the CPU and carry out further network settings. The display shows occurring error messages directly in plain text. In addition to the functions listed here, a multitude of other functions that are described in the SIMATIC S7-1500 Display Simulator are shown on the display.	• S7-1500, ET 200MP System Manual (http://support.automation.siemens.com/WW/view/en/59191792) • SIMATIC S7-1500 Display Simulator (https://support.industry.siemens.com/cs/ww/en/view/109761758)

Property	Description	Additional information
Supply voltage	A 4-pole connection plug that is located at the front of the CPU supplies the 24 V DC supply voltage.	• Chapter Wiring (Page 74) • S7-1500, ET 200MP System Manual (http://support.automation.siemens.com/WW/view/en/59191792)
PROFINET IO		
PROFINET interface (X1 P1R and X1 P2R)	The X1 interface has two ports (P1R and P2R). In addition to basic PROFINET functionality, its also supports PROFINET IO RT (real time) and IRT (isochronous real time), which means you can configure PROFINET IO communication or real-time settings on the interface. Port 1 and Port 2 can also be used as ring ports for the configuration of redundant ring structures in Ethernet (media redundancy). Basic PROFINET functionality comprises: • HMI communication • Communication with the configuration system • Communication with a higher-level network (backbone, router, Internet) • Communication with another machine or automation cell	PROFINET Function Manual (http://support.automation.siemens.com/WW/view/en/68039307)
Operation of the CPU as • IO controller • I-device	• **IO controller:** As an IO controller the CPU addresses the connected IO devices • **I-device:** As an I-device (intelligent IO device) the CPU is assigned to a higher-level IO controller and is used in the process as an intelligent pre-processing unit of sub-processes	

3.3.2 Firmware functions of the CPU part

Functions

The CPU 1512C-1 PN supports the following functions:

Function	Description	Additional information
Integrated system diagnostics	The system automatically generates the messages for the system diagnostics and outputs these messages via a programming device/PC, HMI device, the Web server or the integrated display. System diagnostics information is also available when the CPU is in STOP mode.	Diagnostics Function Manual (http://support.automation.siemens.com/WW/view/en/59192926)
Integrated Web server	The Web server lets you access the CPU data by means of a network. Evaluations, diagnostics, and modifications are thus possible over long distances. Monitoring and evaluation is possible without STEP 7; all you need is a Web browser. Make sure that you take appropriate measures (e.g. limiting network access, using firewalls) to protect the CPU from being compromised.	• Web server Function Manual (http://support.automation.siemens.com/WW/view/en/59193560) • Security with SIMATIC S7 controllers System Manual (https://support.industry.siemens.com/cs/ww/en/view/90885010)

Function	Description	Additional information
Integrated trace functionality	Trace functionality supports you in troubleshooting and/or optimizing the user program. You record device tags and evaluate the recordings with the trace and logic analyzer function. Tags are, for example, drive parameters or system and user tags of a CPU. The device saves the recordings. You can read out and permanently save the recordings with the configuration system (ES), if required. The trace and logic analyzer function is therefore suitable for monitoring highly dynamic processes. The trace record can also be displayed through the Web server.	Using the trace and logic analyzer function Function Manual (http://support.automation.siemens.com/WW/view/en/64897128)
OPC UA	With OPC UA, data is exchanged via an open and vendor-neutral communication protocol. The CPU can act as OPC UA server. The CPU can communicate with OPC UA clients as an OPC UA server. Through OPC UA Companion Specification, the methods can be specified uniformly and independently of manufacturers. The specified methods enable you to integrate devices from various manufacturers more easily into your plants and production processes.	Communication Function Manual (https://support.industry.siemens.com/cs/ww/en/view/59192925)
Configuration control	You can use configuration control to operate different real hardware configurations with a configured maximum configuration of the hardware. This means that, in series machine manufacturing in particular, you have the option of operating/configuring different configuration variants of a machine with a single project.	S7-1500, ET 200MP System Manual (http://support.automation.siemens.com/WW/view/en/59191792)
PROFINET IO		
RT (real time)	RT prioritizes PROFINET IO telegrams over standard telegrams. This ensures the required determinism in the automation technology. In this process the data is transferred via prioritized Ethernet telegrams.	PROFINET Function Manual (http://support.automation.siemens.com/WW/view/en/49948856)
IRT (isochronous real time)	A reserved bandwidth within the send clock is available for IRT data. The reserved bandwidth ensures that the IRT data can be transmitted in time-synchronized intervals, unaffected by other high network loading (e.g. TCP/IP communication or additional real time communication). Update times with maximum determinism can be realized through IRT. Isochronous applications are possible with IRT.	
Isochronous mode	The Isochronous mode system property acquires measured values and process data and processes the signals in a fixed system clock. Isochronous mode thus contributes to high control quality and hence to greater manufacturing precision. Isochronous mode reduces possible fluctuations of the process reaction times to a minimum. Time-assured processing makes higher machine cycles possible.	

Function	Description	Additional information
MRP (Media Redundancy Protocol)	It is possible to establish redundant networks via the Media Redundancy Protocol. Redundant transmission links (ring topology) ensure that an alternative communication path is made available if a transmission link fails. The PROFINET devices that are part of this redundant network form an MRP domain. RT operation is possible with the use of MRP.	PROFINET Function Manual (http://support.automation.siemens.com/WW/view/en/49948856)
MRPD (Media Redundancy with Planned Duplication)	The advantage of the MRP extension MRPD is that, in the event of a failure of a device or a line in the ring, all other devices continue to be supplied with IO data without interruption and with short update times. MRPD is based on IRT and MRP. To realize media redundancy with short update times, the PROFINET devices participating in the ring send their data in both directions. The devices receive this data at both ring ports so that there is no reconfiguration time.	
Shared device	The "Shared device" function allows you to divide the modules or submodules of an IO device up among different IO controllers. Numerous IO controllers are often used in larger or widely distributed systems. Without the "Shared device" function, each I/O module of an IO device is assigned to the same IO controller. If sensors that are physically close to each other must provide data to different IO controllers, several IO devices are required. The "Shared device" function allows the modules or submodules of an IO device to be divided up among different IO controllers, thus allowing flexible automation concepts. You can, for example, combine I/O modules that are physically close to each other in one IO device.	
PROFIenergy	PROFIenergy is a PROFINET-based data interface for switching off consumers centrally and with full coordination during pause times regardless of the manufacturer or device type. Through this, the process should only be provided with the energy that is absolutely required. The majority of the energy is saved by the process; the PROFINET device itself only contributes a few watts of savings potential.	
Integrated technology		
Motion Control	S7-1500 CPUs support the controlled positioning and traveling of axes via S7-1500 Motion Control functions by means of the following technology objects: Speed axes, positioning axes, synchronous axes, external encoders, output cams, cam tracks, and measuring inputs. • Speed-controlled axis for controlling a drive with speed specification • Positioning axis for position-controlled positioning of a drive • Synchronous axis to interconnect with a master value. The axis is synchronized to the master axis position.	• Section Technology functions (Page 42) • S7-1500T Motion Control function manuals (https://support.industry.siemens.com/cs/ww/en/view/109751049)

Function	Description	Additional information
	• External encoder for detecting the actual position of an encoder and its use as a master value for synchronous operation • Cams, cam track for position-dependent generation of switching signals • Measuring input for fast, accurate and event-dependent sensing of actual positions	
Integrated closed-loop control functionality	• PID Compact (continuous PID controller) • PID 3Step (step controller for integrating actuators) • PID Temp (temperature controller for heating and cooling with two separate actuators)	PID control Function Manual (https://support.industry.siemens.com/cs/ww/en/view/108210036)
Integrated safety		
Know-how protection	The know-how protection protects user blocks against unauthorized access and modifications.	S7-1500, ET 200MP System Manual (http://support.automation.siemens.com/WW/view/en/59191792)
Copy protection	Copy protection links user blocks to the serial number of the SIMATIC memory card or to the serial number of the CPU. User programs cannot run without the corresponding SIMATIC memory card or CPU.	
Local user management (as of FW version V3.1)	Improved management of users, roles, and CPU function rights (User Management & Access Control, UMAC). You can used the local user management in the editor to manage all project users along with their rights (e.g. access rights) for users and roles of the project in the TIA Portal.	
Access protection (up to FW version V3.0)	You can use authorization levels to assign separate rights to different users.	
Integrity protection	The CPUs feature an integrity protection function by default. This helps to detect any manipulation of the engineering data on the SIMATIC Memory Card or during data transfer between the TIA Portal and the CPU, and to check communication from a SIMATIC HMI system to the CPU for possible manipulation of engineering data. The user receives a corresponding message about the manipulation of engineering data detected by the integrity protection.	
Password provider	As an alternative to manual password input you can connect a password provider to STEP 7. A password provider offers the following advantages: • Convenient handling of passwords. STEP 7 reads the password automatically for the blocks. This saves you time. • Optimum block protection because the users do not know the password itself.	

3.3.3 Hardware properties of the analog on-board I/O module

View

The following figure shows the analog on-board I/O (X10) of the CPU 1512C-1 PN.



Figure 3-2 Analog on-board I/O

Properties of the analog inputs

The 5 inputs of the analog on-board I/O module have the following properties:

Property	Description	Additional information
Resolution: 16 bits including sign	A CPU processes information exclusively in digital format. An ADC (analog-to-digital converter) integrated into the analog on-board I/O module therefore converts the analog value into a bit pattern. For the CPU, this conversion always returns a 16-bit word for SIMATIC products. The ADC used digitalizes the analog signal and approximates its value with a stepped curve. The resolution specifies the number of increments of the analog value along this stepped curve here.	• Chapter Analog value processing • Analog value processing function manual (http://support.automation.siemens.com/WW/view/en/67989094)
Integrated types of measuring	Controllers are only capable of processing analog values in the form of bit patterns. For this purpose, transducers which can be connected to the analog module measure physical variables such as pressure or temperature. This analog value is measured by the analog input module in the form of the measurement types current, voltage or resistance. The analog on-board I/O module supports the following measurement types on the following channels.	

Property	Description	Additional information
	• Voltage measurement type can be set individually for channel 0 to 3 • Current measurement type can be set individually for channel 0 to 3 • Resistor measurement type can be set for channel 4 • Thermal resistor measurement type can be set for channel 4	
Configurable diagnostics	The analog on-board I/O module can diagnose errors. The module reports the diagnosed state to the CPU using a diagnostics error interrupt. Different types of diagnostics are available that you can parameterize channel-granularly.	Chapter Parameters of the analog on-board I/O (Page 118)
Hardware interrupt	You can react to process events (such as negative/positive exceeding of specific limits) through the configuration of a hardware interrupt. Hardware interrupts can be parameterized channel-granularly.	• Chapter Parameters of the analog on-board I/O (Page 118) • Chapter Structure of a data record for input channels of the analog on-board I/O (Page 161) • STEP 7 online help

Properties of the analog outputs

The 2 outputs of the analog on-board I/O module have the following properties:

Property	Description	Additional information
Resolution: 16 bits including sign	Once the CPU has processed the digital signal, a DAC (digital-to-analog converter) integrated in the analog on-board I/O module converts the output signal to an analog current or voltage value. The resulting value of the output signal corresponds to the output value with which the analog on-board I/O module controls the analog actuators.	• Chapter Analog value processing • Analog value processing function manual (http://support.automation.siemens.com/WW/view/en/67989094)
Integrated output types	With the selection of the type of output you specify whether the digital-to-analog converter is to convert the output signal into the type of output "Current" or "Voltage". The output can be selected by individual channel.	
Configurable diagnostics	The analog on-board I/O module can diagnose errors. The module reports the diagnosed state to the CPU using a diagnostics error interrupt. Different types of diagnostics are available that you can parameterize channel-granularly.	Chapter Parameters of the analog on-board I/O (Page 118)

3.3.4 Firmware functions of the analog on-board I/O module

Functions of the analog inputs

The 5 inputs of the analog on-board I/O module have the following functions:

Function	Description	Additional information
Reconfiguration in RUN	You have the option of reassigning parameters for the analog on-board I/O module in RUN (for example, measuring ranges of individual channels can be modified in RUN without affecting the other channels).	• Chapter Parameters of the analog on-board I/O (Page 118) • Chapter Parameter assignment and structure of the parameter data records of the analog on-board I/O (Page 160)
Support of the value status (Quality Information, QI)	Value status = 1 ("Good") indicates that the value of the assigned input at the terminal is valid. Value status = 0 ("Bad") indicates that the read value is not valid.	Chapter Address space of the analog on-board I/O (Page 111)

Functions of the analog outputs

The 2 outputs of the analog on-board I/O module have the following functions:

Function	Description	Additional information
Reconfiguration in RUN	You have the option of reassigning parameters for the analog on-board I/O module in RUN (for example, output ranges of individual channels can be modified in RUN without affecting the other channels).	• Chapter Parameters of the analog on-board I/O (Page 118) • Chapter Parameter assignment and structure of the parameter data records of the analog on-board I/O (Page 160)
Support of the value status (Quality Information, QI)	Value status = 1 ("Good") indicates that the process value specified by the user program is correctly output at the terminal. Value status = 0 ("Bad") indicates that the process value output at the hardware output is incorrect.	Chapter Address space of the analog on-board I/O (Page 111)

3.3.5 Hardware properties of the digital on-board I/O module

View

The following figure shows the digital on-board I/O (X11 and X12) of the CPU 1512C-1 PN.



Figure 3-3 Digital on-board I/O

Properties of the digital inputs

The digital inputs of the digital on-board I/O module have the following properties:

Property	Description	Additional information
Standard and high-speed inputs	The digital on-board I/O module has 32 high-speed inputs for signals up to a max. of 100 kHz. The inputs can be used as standard inputs and as inputs for technology functions. The inputs have a rated input voltage of 24 V DC. The inputs are suitable for switches and 2-/3-/4-wire proximity switches.	Section Wiring (Page 74)
Configurable diagnostics	The digital on-board I/O module is able to diagnose errors. The module reports the diagnosed state to the CPU using a diagnostics error interrupt. You can parameterize the type of diagnostics channel-specifically.	Section Parameters of the digital on-board I/O (Page 120)
Hardware interrupt	You can react to process events (such as positive edge, negative edge) through the configuration of a hardware interrupt. Hardware interrupts can be parameterized channel-granularly.	Section Parameters of the digital on-board I/O (Page 120) Section Structure of a data record for input channels of the digital on-board I/O (Page 170) STEP 7 online help

Properties of the digital outputs

The digital outputs of the digital on-board I/O module have the following properties:

Property	Description	Additional information
Configurable diagnostics	The digital on-board I/O module is able to diagnose errors. The module reports the diagnosed state to the CPU using a diagnostics error interrupt. You can parameterize the type of diagnostics channel-specifically.	Section Interconnection overview of outputs (Page 108)
Standard and high-speed outputs		
Standard outputs	The digital on-board I/O module has 32 standard outputs.	Section Wiring (Page 74)
High-speed outputs	Of the 32 standard outputs you can also use 8 outputs as high-speed outputs for technology functions.	
Rated output voltage	The outputs have a rated output voltage of 24 V DC.	
Output frequencies and output currents	Rated output current as output for standard mode: 0.5 A per channel. As an output for technology functions, you can select between an output current of up to 0.5 A at an output frequency up to 10 kHz (load dependent) and a reduced output current of max. 0.1 A at an increased output frequency of up to 100 kHz.	Section Interconnection overview of outputs (Page 108)
Application	The outputs are suitable for, e.g. solenoid valves, DC contactors and indicator lights, or also for signal transmission or proportional valves.	
Driver blocks X11	The digital outputs of the digital onboard I/O X11 have driver blocks with parasitic diodes. In principle, parasitic diodes have an effect when switching off inductive loads such as freewheeling diodes. The shutdown voltage is limited to -0.8 V. Therefore, the demagnetization of inductive loads takes longer and can be approximately calculated using the following formula. **tau = L / R** (tau= time constant, L = inductance value, R = ohmic resistance value) After the expiration of a period of 5 * tau, the current has decreased in effect to 0 A due to the inductive load. The maximum value is derived from: tau = 1.15H / 48 ohms = 24 ms. After 5 * 24 ms = 120 ms, the current has decreased in effect to 0 A. For comparison: With standard modules, inductive shutdown voltage is limited, for example, to Vcc -53 V (supply voltage – 53 V), which causes the current to decrease to 0 A after about 15 ms.	Section Terminal and block diagram of the digital on-board I/O (Page 87)
Driver blocks X12	The driver blocks of the outputs from the digital inboard I/O X12 have no freewheeling diodes. The cut-off voltage is -29 V. Inductive loads are therefore demagnetized faster than for X11. If ground is interrupted, no unwanted current flows through the digital outputs to the ground.	

Simultaneous use of technology and standard functions

You can use technology and standard functions at the same time, provided the hardware allows this. For example, all the digital inputs not assigned to the counting, measuring or position detection or PTO technology functions can be used as standard DI.
Inputs to which technology functions are assigned can be read. Outputs to which technology functions are assigned cannot be written.

See also

Parameter assignment and structure of the parameter data records of the digital on-board I/O (Page 170)

3.3.6 Firmware functions of the digital on-board I/O module

Functions of the digital inputs

The digital inputs of the digital on-board I/O module have the following functions:

Function	Description	Additional information
Technology functions	The high-speed digital inputs of the digital on-board I/O module support technology functions such as fast counting, measuring, position detection and pulse generators (PWM, PTO and frequency output).	Chapter Technology functions (Page 42)
Reconfiguration in RUN	You have the option of reassigning parameters for the digital on-board I/O module in RUN (for example, values for input delay of individual channels can be modified without affecting the other channels).	• Chapter Parameters of the digital on-board I/O (Page 120) • Chapter Parameter assignment and structure of the parameter data records of the digital on-board I/O (Page 170)
Support of the value status (Quality Information, QI)	Value status = 1 ("Good") indicates that the value of the assigned input at the terminal is valid. Value status = 0 ("Bad") indicates that no/too little supply voltage L+ is applied at the terminal and that the read value is therefore not valid.	Chapter Address space of the digital on-board I/O (Page 113)

Functions of the digital outputs

The digital outputs of the digital on-board I/O module have the following functions:

Function	Description	Additional information
Technology functions	The high-speed digital outputs of the digital on-board I/O module support technology functions such as fast counting, measuring, position detection and pulse generators (PWM, PTO and frequency output). Due to the supported technology functions, the compact CPUs are suitable for controlling pumps, fans, mixers, conveyor belts, lifting platforms, gate control systems, building management systems, synchronized axes, etc.	Chapter Technology functions (Page 42)

Function	Description	Additional information
Reconfiguration in RUN	You have the option of reassigning parameters for the digital on-board I/O module in RUN (for example, behavior during CPU STOP, without affecting the other channels).	• Chapter Parameters of the digital on-board I/O (Page 120) • Chapter Parameter assignment and structure of the parameter data records of the digital on-board I/O (Page 170)
Support of the value status (Quality Information, QI)	Value status = 1 ("Good") indicates that the process value specified by the user program is correctly output at the terminal. Value status = 0 ("Bad") indicates that the process value output at the hardware output is incorrect or the channel is used for technology functions.	Chapter Address space of the digital on-board I/O (Page 113)

3.4 Operator controls and display elements

3.4.1 Front view with closed front panel

The following figure shows the front view of the CPU 1512C-1 PN.

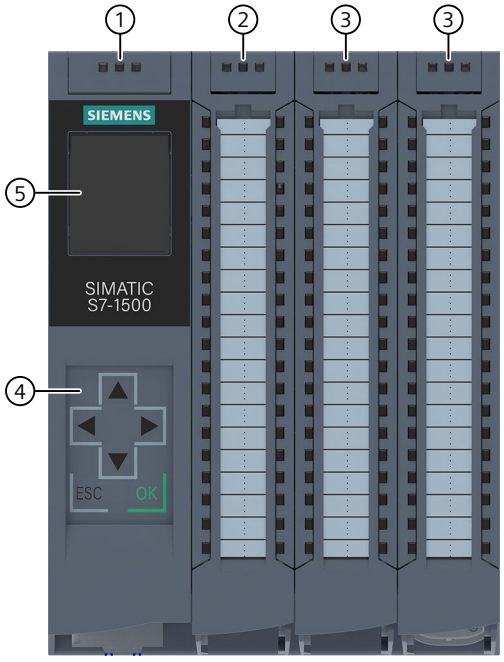

① LEDs for the current operating mode and diagnostics status of the CPU
② Status and error displays RUN/ERROR of the analog on-board I/O
③ Status and error displays RUN/ERROR of the digital on-board I/O
④ Control keys
⑤ Display

Figure 3-4 View of the CPU 1512C-1 PN with closed front panels (front)

NOTE

Temperature range for display

To increase its service life, the display switches off at a temperature below the permitted operating temperature of the device. When the display cools down again, it automatically switches itself on again. When the display is switched off, the LEDs continue to show the status of the CPU.

You can find additional information on the temperatures at which the display switches itself on and off in the Technical specifications (Page 135).

Removing and fitting the front panel or display

You can remove and fit the front panel or the display during operation.

⚠ WARNING

Personal injury and damage to property may occur

In Zone 2 hazardous areas, personal injury or damage to property can occur if you pull or plug the display of an S7-1500 automation system during operation.

Before you pull or plug the display in Zone 2 hazardous areas, first make sure that the S7-1500 automation system is de-energized.

Locking the front panel

You can lock the front panel to protect your CPU against unauthorized access.
You can attach a security seal or a padlock with a hoop diameter of 3 mm to the front panel.

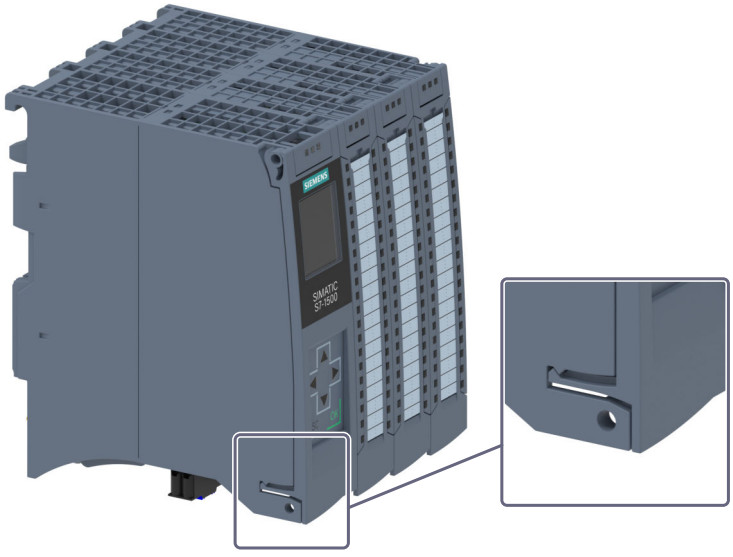

Figure 3-5 Locking latch on the CPU

In addition to the mechanical lock, you can also block access to a password-protected CPU on the display (local lock) and assign a password for the display. For more information on the

display, the configurable protection levels and the local lock, refer to the S7-1500, ET 200MP (http://support.automation.siemens.com/WW/view/en/59191792) system manual.

Reference

You will find detailed information on the individual display options, a training course and a simulation of the available menu commands in the SIMATIC S7-1500 Display Simulator (https://support.industry.siemens.com/cs/ww/en/view/109761758).

3.4.2 Front view of the CPU without front panel and view from below

The following figure shows the operator control and connection elements of the CPU 1512C-1 PN with the front cover of the CPU open.

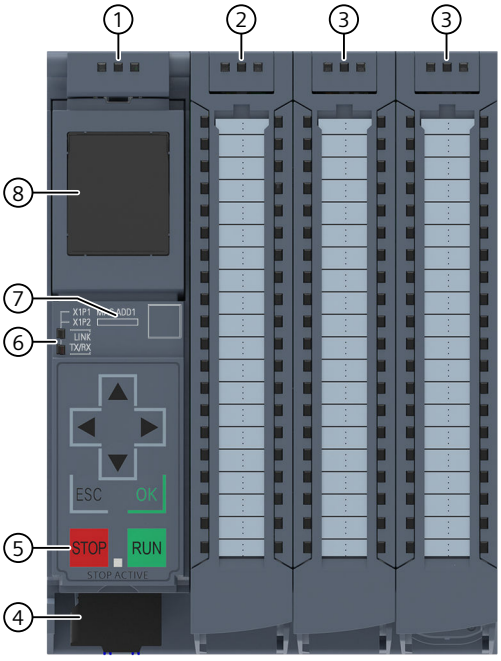

① LEDs for the current operating mode and diagnostics status of the CPU
② Status and error displays RUN/ERROR of the analog on-board I/O
③ Status and error displays RUN/ERROR of the digital on-board I/O
④ Connector for power supply
⑤ Operating modes with "STOP ACTIVE" LED
⑥ LEDs for the 2 ports (X1 P1 and X1 P2) of the PROFINET interface X1
⑦ MAC address
⑧ Display

Figure 3-6 View of the CPU 1512C-1 PN without front panel on the CPU (front)

NOTE

Removing the display

Only remove the display if it is faulty.

You can find information on removing and replacing displays in the S7-1500, ET 200MP system manual (http://support.automation.siemens.com/WW/view/en/59191792).

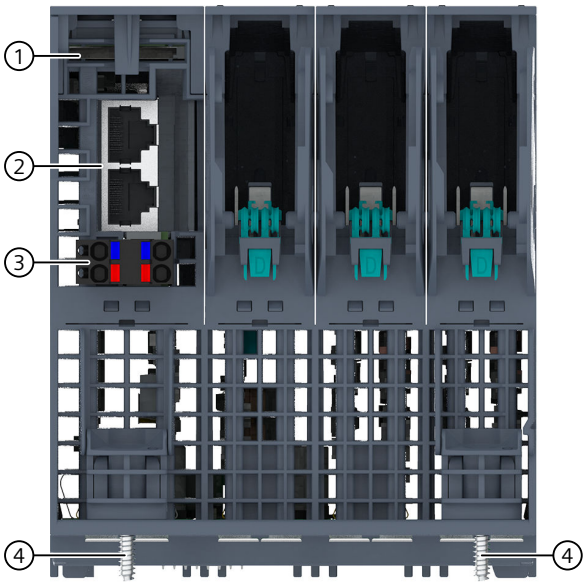

① Slot for the SIMATIC memory card
② PROFINET IO interface (X1) with 2 ports
③ Connection for supply voltage
④ Fastening screw

Figure 3-7 View of the CPU 1512C-1 PN – bottom

3.4.3 Rear view

The following figure shows the connection elements on the rear of the CPU 1512C-1 PN.

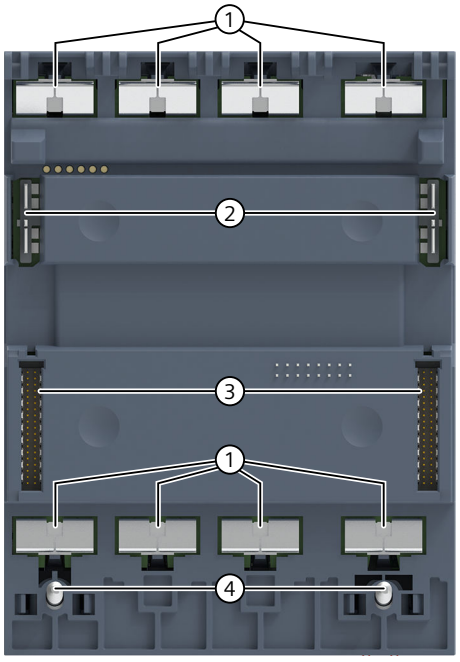

① Shield contact surfaces
② Plug-in connection for power supply
③ Plug-in connection for backplane bus
④ Fastening screws

Figure 3-8 View of the CPU 1512C-1 PN - rear

3.5 Operating mode buttons

You use the operating mode buttons to set the operating mode of the CPU.
The following table shows the meaning of the corresponding operation of the operating mode buttons.

Table 3-6 Meaning of the operating mode buttons

Operation of the operating mode buttons	Meaning	Explanation
RUN	RUN mode	The CPU executes the user program.
STOP	STOP mode	The user program is not executed. (STOP ACTIVE LED lights up).
MRES	Manual memory reset (with inserted SIMATIC memory card) or Reset to factory settings (without inserted SIMATIC memory card):	The CPU executes memory reset. or The CPU is reset to its factory settings. You can find additional information in the S7-1500/ET 200MP system manual (https://support.industry.siemens.com/cs/ww/en/view/59191792).

Operation of the operating mode buttons	Meaning	Explanation
1. Press the operating mode button STOP. Result: The RUN/STOP LED lights up yellow. 2. Press the operating mode button STOP until the RUN/STOP LED lights up for the 2nd time and remains continuously lit (this takes three seconds). After this, release the button. 3. Press the operating mode button STOP again within the next three seconds.		

Technology functions

4

4.1 High-speed counters

Properties

The technology functions of the compact CPU have the following technical properties:

- 32 high-speed digital inputs (up to 100 kHz), isolated
  - 6 high-speed counters (High Speed Counter/HSC), which can all be used as A/B/N
- Interfaces
  - 24 V encoder signals of sourcing or push-pull encoders and sensors
  - 24 V encoder supply output, short-circuit-proof
  - Up to 2 additional digital inputs per high-speed counter for possible HSC DI functions (Sync, Capture, Gate)
  - 1 digital output per high-speed counter for fast reaction to the count
- Counting range: 32 bits
- Diagnostics and hardware interrupts can be configured
- Supported encoder/signal types
  - 24 V incremental encoder
    (with 2 tracks A and B, phase-shifted by 90°, up to 6 incremental encoders also with zero track N)
  - 24 V pulse encoder with direction signal
  - 24 V pulse encoder without direction signal
  - 24 V pulse encoder each for forward pulse & reverse pulse

The high-speed counters support reconfiguration in RUN. You can find additional information in section Parameter data records of the high-speed counters (Page 173).

4.1.1 Functions

4.1.1.1 Counting

Counting refers to the detection and adding up of events. The counters acquire and evaluate encoder signals and pulses. You can specify the count direction using encoder or pulse signals or through the user program.
You can control counting processes using the digital inputs. You can switch the digital outputs exactly at defined count values, regardless of the user program.
You can configure the response of the counters using the functionalities described below.

Counting limits

The counting limits define the count value range used. The counting limits are selectable and can be modified during runtime by the user program.
The highest counting limit that can be set is 2147483647 (2^{31}–1). The lowest counting limit that can be set is –2147483648 ($–2^{31}$).
You can configure the response of the counter at the counting limits:

- Continue or stop counting (automatic gate stop) on violation of a counting limit
- Set count value to start value or to opposite counting limit on violation of a counting limit

Start value

You can configure a start value within the counting limits. The start value can be modified during runtime by the user program.
Depending on the parameter assignment, the compact CPU can set the current count value to the start value during synchronization, during the Capture function, on violation of a counting limit or when the gate is opened.

Gate control

Opening and closing the hardware gate and software gate defines the period of time during which the counting signals are acquired.
The digital inputs of the digital on-board I/O control the hardware gate. The user program controls the software gate. You can enable the hardware gate using the parameter assignment. The software gate (bit in the control interface of the cyclic I/O data) cannot be disabled.

Capture

You can configure an external reference signal edge that triggers the saving of the current count value as a Capture value. The following external signals can trigger the Capture function:

- Rising or falling edge of a digital input
- Both edges of a digital input
- Rising edge of signal N at the encoder input

You can configure whether counting continues from the current count value or from the start value after the Capture function.

Hysteresis

You can specify hysteresis for the comparison values, within which a digital output is prevented from switching again. An encoder may stop at a certain position, and slight movements may make the count value fluctuate around this position. If a comparison value or a counting limit lies within this fluctuation range, the corresponding digital output will be switched on and off often if hysteresis is not used. The hysteresis prevents these unwanted switching operations.

Reference

For more information on the counter, refer to the S7-1500, ET 200MP, ET 200SP Counting, measurement and position detection function manual (http://support.automation.siemens.com/WW/view/en/59709820).

4.1.1.2 Measuring

Measuring functions

The following measuring functions are available:

Table 4-1 Overview of available measuring functions

Measurement type	Description
Frequency measurement	A measuring interval calculates the average frequency based on the time sequence of the count pulses, and returns this frequency as a floating-point number in units of hertz.
Period measurement	A measuring interval calculates the average period duration based on the time sequence of the count pulses, and returns this period duration as a floating-point number in units of seconds.
Velocity measurement	A measuring interval calculates the average velocity based on the time sequence of the count pulses, and returns this velocity in the configured unit.

The measured value and count value are both available in the feedback interface.

Update time

You can configure the interval at which the compact CPU updates the measured values cyclically as the update time. Larger update times smooth uneven measured variables and increase the measuring accuracy.

Gate control

Opening and closing the hardware gate and software gate defines the period of time during which the count signals are acquired. The update time is asynchronous to the opening of the gate, which means that the update time is not started when the gate is opened. After the gate is closed, the last measured value calculated is still returned.

Measuring ranges

The measuring functions have the following measuring range limits:

Table 4-2 Overview of low and high measuring range limits

Measurement type	Low measuring range limit	High measuring range limit
Frequency measurement	0.04 Hz	400 kHz *
Period measurement	2.5 µs *	25 s
Velocity measurement	Depending on the configured number of "increments per unit" and the "timebase for velocity measurement"	

* Applies to 24 V incremental encoder and "quadruple" signal evaluation

All measured values are returned as signed values. The sign indicates whether the count value increased or decreased during the relevant time period. For example, a value of -80 Hz means that the count value decreases at 80 Hz.

Reference

For more information on measuring, refer to the S7-1500, ET 200MP, ET 200SP Counting, measurement and position detection function manual (http://support.automation.siemens.com/WW/view/en/59709820).

4.1.1.3 Position detection for motion control

You can use the digital on-board I/O, e.g. with an incremental encoder, for position detection with S7-1500 Motion Control. The position input is based on the counting function, which evaluates the acquired encoder signals and provides them for S7-1500 Motion Control.

In the hardware configuration of the CPU 1512C-1 PN in STEP 7 (TIA Portal), select the "Position input for Motion Control" mode.

Reference

For a detailed description of the use of motion control and its configuration, refer to the S7-1500 Motion Control function manual (http://support.automation.siemens.com/WW/view/en/109749262). In the function module, the interface between the drives and encoders is referred to as a technology module (TM). In this context, a technology module (TM) also refers to the digital on-board I/O of the compact CPU described here.

4.1.1.4 Additional functions

Synchronization

You can configure an external reference signal edge to load the counter with the specified start value. The following external signals can trigger a synchronization:

- Rising or falling edge of a digital input
- Rising edge of signal N at the encoder input
- Rising edge of signal N at the encoder input depending on the level of the assigned digital input

Comparison values

The integrated counter supports 2 comparison values and digital output HSC DQ1. If the counter or measured value meets the set comparison condition, HSC DQ1 can be set in order to trigger direct control operations in the process.

Both comparison values can be set in the parameters and can be changed during runtime by the user program.

Hardware interrupts

If you have enabled a hardware interrupt in the hardware configuration, the counter can trigger a hardware interrupt in the CPU when a comparison event occurs, if there is overflow or underflow, at a zero crossing of the counter, and/or at a change of count direction (direction reversal). You can specify which events are to trigger a hardware interrupt during operation in the hardware configuration.

Diagnostics interrupts

If you have enabled a diagnostics interrupt in the hardware configuration, the counter can trigger a diagnostics interrupt if the supply voltage is missing, if there is an incorrect A/B count signal or lost hardware interrupt.

4.1.2 Configuring the high-speed counters

4.1.2.1 General

You configure the high-speed counters (HSC) in STEP 7 (TIA Portal).
The functions are controlled by the user program.

Reference

A detailed description of configuring the counting and measuring functions can be found in:

- S7-1500, ET 200MP, ET 200SP Counting, measurement and position detection (http://support.automation.siemens.com/WW/view/en/59709820) function manual
- in the STEP 7 online help under "Using technology functions > Counting, measuring and position detection > Counting, measuring and position detection (S7-1500)"

A detailed description of configuring Motion Control be found in:

- in the S7-1500/S7-1500T Motion Control (https://support.industry.siemens.com/cs/ww/en/view/109766459) function manual
- in the STEP 7 online help under "Using technology functions > Motion Control > Motion Control (S7-1500)"

4.1.2.2 Assignment of the control interface of the high-speed counters

The user program uses the control interface to influence the behavior of the high speed counter.

NOTE

Operation with High_Speed_Counter technology object

The High_Speed_Counter technology object is available for high-speed counting mode. We therefore recommend use of the High_Speed_Counter technology object instead of the control interface/feedback interface for controlling the high speed counter.

For information on configuring the technology object and programming the associated instruction, refer to the S7-1500, ET 200MP, ET 200SP Counting, measurement and position detection (http://support.automation.siemens.com/WW/view/en/59709820) function manual.

Control interface per channel

The following table shows the control interface assignment:

Table 4-3 Assignment of the control interface

Offset from start address	Parameter	Meaning				
Bytes 0 to 3	Slot 0	Load value (meaning of the value is specified in LD_SLOT_0)				
Bytes 4 to 7	Slot 1	Load value (meaning of the value is specified in LD_SLOT_1)				
Byte 8	LD_SLOT_0*	Specifies the meaning of the value in Slot 0				
		Bit 3	**Bit 2**	**Bit 1**	**Bit 0**	

* If values are loaded simultaneously via LD_SLOT_0 and LD_SLOT_1, the value from Slot 0 is taken first internally and then the value from Slot 1 . This may lead to unexpected intermediate states.

Offset from start address	Parameter	Meaning				
Byte 8	LD_SLOT_0*	0	0	0	0	No action, idle state
		0	0	0	1	Load counter
		0	0	1	0	Reserve
		0	0	1	1	Load start value
		0	1	0	0	Load comparison value 0
		0	1	0	1	Load comparison value 1
		0	1	1	0	Load low counting limit
		0	1	1	1	Load high counting limit
		1	0	0	0	Reserve
		to				
		1	1	1	1	
	LD_SLOT_1*	Specifies the meaning of the value in Slot 1				
		Bit 7	**Bit 6**	**Bit 5**	**Bit 4**	
		0	0	0	0	No action, idle state
		0	0	0	1	Load counter
		0	0	1	0	Reserve
		0	0	1	1	Load start value
		0	1	0	0	Load comparison value 0
		0	1	0	1	Load comparison value 1
		0	1	1	0	Load low counting limit
		0	1	1	1	Load high counting limit
		1	0	0	0	Reserve
		to				
		1	1	1	1	
Byte 9	EN_CAPTURE	Bit 7: Enable capture function				
	EN_SYNC_DN	Bit 6: Enable downward synchronization				
	EN_SYNC_UP	Bit 5: Enable upward synchronization				
	SET_DQ1	Bit 4: Set DQ1				
	SET_DQ0	Bit 3: Set DQ0				
	TM_CTRL_DQ1	Bit 2: Enable technological function DQ1				
	TM_CTRL_DQ0	Bit 1: Enable technological function DQ0				
	SW_GATE	Bit 0: Software gate				
Byte 10	SET_DIR	Bit 7: Count direction (with encoder without direction signal)				
	–	Bits 2 to 6: Reserve; bits must be set to 0				
	RES_EVENT	Bit 1: Reset of saved events				
	RES_ERROR	Bit 0: Reset of saved error states				
Byte 11	–	Bits 0 to 7: Reserve; bits must be set to 0				

* If values are loaded simultaneously via LD_SLOT_0 and LD_SLOT_1, the value from Slot 0 is taken first internally and then the value from Slot 1 . This may lead to unexpected intermediate states.

Reference

You can find a graphic representation of the processing of the various SLOT parameters in the section Handling the SLOT parameter (control interface) (Page 69).

4.1.2.3 Assignment of the feedback interface of the high-speed counters

The user program receives current values and status information from the high speed counter via the feedback interface.

NOTE

Operation with High_Speed_Counter technology object

The High_Speed_Counter technology object is available for high-speed counting mode. We therefore recommend use of the technology object High_Speed_Counter instead of the control interface/feedback interface for controlling the high speed counter.

For information on configuring the technology object and programming the associated instruction, refer to the S7-1500, ET 200MP, ET 200SP Counting, measurement and position detection (http://support.automation.siemens.com/WW/view/en/59709820) function manual.

Feedback interface per channel

The following table shows the feedback interface assignment:

Table 4-4 Assignment of the feedback interface

Offset from start address	Parameter	Meaning
Bytes 0 to 3	COUNT VALUE	Current count value
Bytes 4 to 7	CAPTURED VALUE	Last Capture value acquired
Bytes 8 to 11	MEASURED VALUE	Current measured value
Byte 12	–	Bits 3 to 7: Reserve; set to 0
	LD_ERROR	Bit 2: Error when loading via control interface
	ENC_ERROR	Bit 1: Incorrect encoder signal
	POWER_ERROR	Bit 0: Incorrect supply voltage L+
Byte 13	–	Bits 6 to 7: Reserve; set to 0
	STS_SW_GATE	Bit 5: Software gate status
	STS_READY	Bit 4: Digital on-board I/O started up and parameters assigned
	LD_STS_SLOT_1	Bit 3: Load request for Slot 1 detected and executed (toggling)
	LD_STS_SLOT_0	Bit 2: Load request for Slot 0 detected and executed (toggling)
	RES_EVENT_ACK	Bit 1: Reset of event bits active
	–	Bit 0: Reserve; set to 0
Byte 14	STS_DI2	Bit 7: Reserve; set to 0
	STS_DI1	Bit 6: Status HSC DI1
	STS_DI0	Bit 5: Status HSC DI0
	STS_DQ1	Bit 4: Status HSC DQ1
	STS_DQ0	Bit 3: Status HSC DQ0

Offset from start address	Parameter	Meaning
Byte 14	STS_GATE	Bit 2: Internal gate status
	STS_CNT	Bit 1: Count pulse detected within last approx. 0.5 s
	STS_DIR	Bit 0: Direction of last count value change
Byte 15	STS_M_INTERVAL	Bit 7: Count pulse detected in previous measuring interval
	EVENT_CAP	Bit 6: Capture event has occurred
	EVENT_SYNC	Bit 5: Synchronization has occurred
	EVENT_CMP1	Bit 4: Comparison event for DQ1 has occurred
	EVENT_CMP0	Bit 3: Comparison event for DQ0 has occurred
	EVENT_OFLW	Bit 2: Overflow has occurred
	EVENT_UFLW	Bit 1: Underflow has occurred
	EVENT_ZERO	Bit 0: Zero crossing has occurred

4.2 Pulse generators

4.2.1 Operating modes

4.2.1.1 Operating mode: Pulse-width modulation (PWM)

Properties

The pulse-width modulation (PWM) mode of the compact CPU has the following technical properties:

	Minimum			Maximum		
	Standard output	High-speed output deactivated	High-speed output activated	Standard output	High-speed output deactivated	High-speed output activated
Pulse duration	400 µs with load > 0.1 A [1] 500 µs with load ≥ 2m A [1]	20 µs with load > 0.1 A [1] 40 µs with load ≥ 2m A [1]	2 µs [1]	10,000,000 µs (10 s)		
Period duration	10 ms [2]	100 µs [2]	10 µs			

[1] A lower value is theoretically possible but, depending on the connected load, the output voltage can no longer be output as complete rectangular pulse

[2] Load dependent

Principle of operation

With pulse width modulation, a signal with defined cycle duration and variable on-load factor is output at the digital output. The on-load factor is the relationship of the pulse duration to the cycle duration. In PWM mode, you can control the on-load factor and the cycle duration.

With pulse width modulation you vary the mean value of the output voltage. Depending on the connected load, you can control the load current or the power with this.

You can specify the pulse duration as one-hundredth of the period duration (0 bis 100), as one-thousandth (0 to 1000), as one ten-thousandth (0 to 10,000) or in S7 analog format.

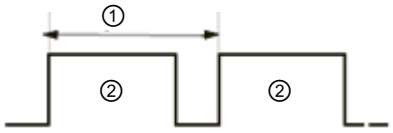

① Period duration

② Pulse duration

The pulse duration can be between 0 (no pulse, always off) and full-scale deflection (no pulse, period duration always on).

The PWM output can, for example, be used to control the speed of a motor from standstill to full speed or you can use it to control the position of a valve from closed to completely open.

You configure the pulse width modulation (PWM) mode in STEP 7 (TIA Portal).

The pulse width modulation mode has the following functions:

- When the option "High-speed output (0.1 A)" is activated, you can generate a minimum pulse duration of 2 µs at a current of 100 mA. If the option "High-speed output (0.1 A)" is not activated, you can generate a minimum pulse duration of 20 µs with a load > 0.1 A and a minimum pulse duration of 40 µs with a load of ≥ 2 mA and a current of maximum 0.5 A. If a standard output is used, you can generate a minimum pulse duration of 400 µs with a load of > 0.1 A and a minimum pulse duration of 500 µs with a load of ≥ 2 mA.
- You can control the pulse output (DQA) of the channel manually via the control and feedback interface.
- You can configure the reaction to CPU STOP. Upon change to CPU STOP, the pulse output (DQA) is set to the configured state.

Controller

For the pulse width modulation (PWM) mode, the user program directly accesses the control and feedback interface of the channel.

A reconfiguration via the instructions WRREC/RDREC and parameter assignment data record 128 is supported. You can find additional information in section Parameter data records (PWM) (Page 179)

You control the on-load factor (pulse-cycle ratio) of the pulse width via the OUTPUT_VALUE field of the control interface. Pulse width modulation generates continuous pulses based on this value. The period duration is adjustable.

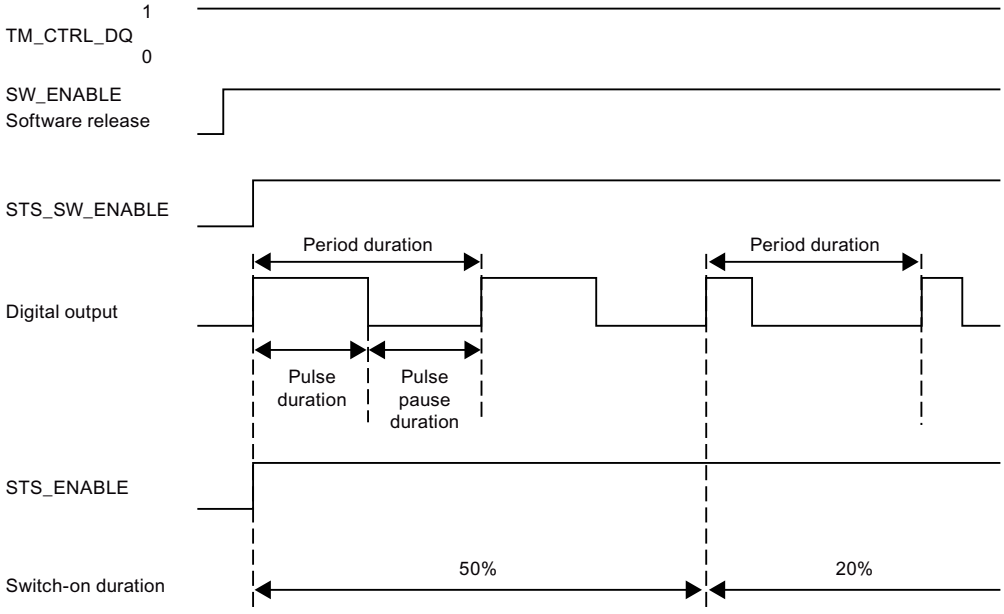

Figure 4-1 Pulse schematic

Starting the output sequence

The control program must output the enable for the output sequence with the help of the software enable (SW_ENABLE 0 → 1). The feedback bit STS_SW_ENABLE indicates that the software enable is pending at the PWM.

If the software enable is activated (rising edge), STS_ENABLE is set. The output sequence runs continuously, as long as SW_ENABLE is set.

NOTE

Output control signal TM_CTRL_DQ

- If TM_CTRL_DQ = 1, the technology function takes over the control and generates pulse sequences at the output PWM DQA.
- If TM_CTRL_DQ = 0, the user program takes over the control and the user can set the output PWM DQA directly via the control bit SET_DQA.

Canceling the output sequence

A deactivation of the software enable (SW_ENABLE = 1 → 0) cancels the current output sequence. The last cycle duration is not completed. STS_ENABLE and the digital output PWM DQA are immediately reset to 0.

A renewed pulse output is only possible after a restart of the output sequence.

Minimum pulse duration and minimum interpulse period

You assign the minimum pulse duration and the minimum interpulse period with the help of the parameter "Minimum pulse duration".

- A pulse duration determined by the technology function or PWM channel which is shorter than the minimum pulse duration will be suppressed.
- A pulse duration determined by the technology function or PWM channel which is longer than the cycle duration less the minimum interpulse period will be set to the value of the cycle duration (output switched on permanently).

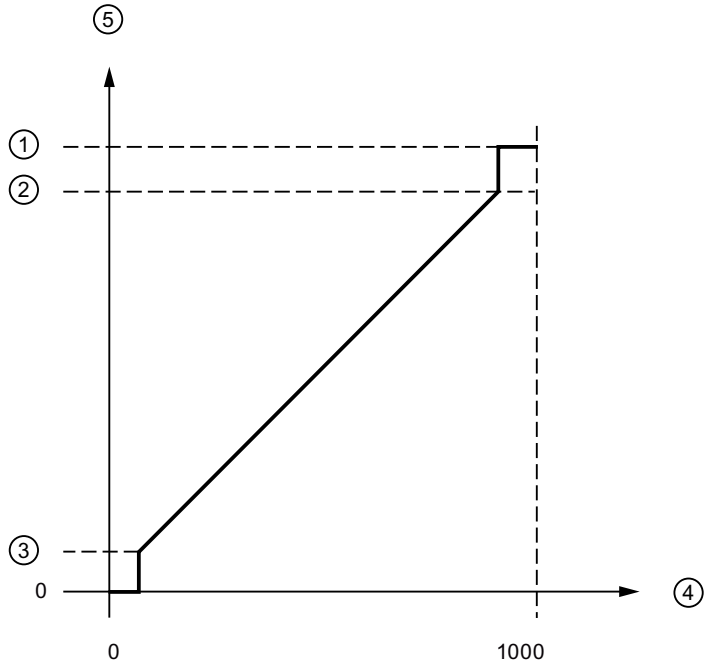

① Cycle duration
② Cycle duration minus minimum interpulse period
③ Minimum pulse duration
④ OUTPUT_VALUE (One tenth of a percent on-load factor)
⑤ Pulse duration

Figure 4-2 Minimum pulse duration and minimum interpulse period

Setting and changing the pulse on-load factor

OUTPUT_VALUE assigns the on-load factor for the current period duration. You select the range of the field OUTPUT_VALUE of the control interface with the "Output format" parameter.

- Output format per 100: Value range between 0 and 100
  Pulse duration = (OUTPUT_VALUE/100) x period duration.
- Output format 1/1000: Value range between 0 and 1 000
  Pulse duration = (OUTPUT_VALUE/1 000) x cycle duration.
- Output format 1/10000: Value range between 0 and 10 000
  Pulse duration = (OUTPUT_VALUE/10 000) x cycle duration.
- Output format "S7 analog output": Value range between 0 and 27,648
  Pulse duration = (OUTPUT_VALUE/27 648) x period duration.

You assign OUTPUT_VALUE directly via the control program. A new OUTPUT_VALUE is applied at the output when the next rising edge occurs.

Setting and changing the period duration

- Permanent updating
  The period duration is permanently controlled via the control interface. The MODE_SLOT bit must be set ("1" means permanent updating); LD_SLOT must be set to value 1 ("1" means period duration). Set the period value in the field SLOT. The unit is always a microsecond.
  - High-speed output activated: between 10 µs and 10 000 000 µs (10 s) in the field SLOT
  - High-speed output deactivated: between 100 µs and 10 000 000 µs (10 s) in the field SLOT
  - Standard output (100 Hz output): between 10 000 µs (10 ms) and 10 000 000 µs (10 s) in the field SLOT
- Individual updating
  Set the period duration in the configuration parameters. Alternatively, execute an individual updating via the control interface. MODE_SLOT must be deleted ("0" means individual updating); LD_SLOT must be set to value 1 ("1" means period duration). Set the period duration value in the field SLOT. The unit is always a microsecond.
  - High-speed output activated: between 10 µs and 10 000 000 µs (10 s) in the parameters
  - High-speed output deactivated: between 100 µs and 10 000 000 µs (10 s) in the parameters
  - Standard output (100 Hz output): between 10 000 µs (10 ms) and 10 000 000 µs (10 s) in the parameters

The new period duration is applied at the next rising edge of the output.

Setting the minimum pulse duration and the minimum interpulse period

You assign the minimum pulse duration and the minimum interpulse period as DWORD numerical value between 0 and 10 000 000 µs (10 s) with the help of the channel parameter configuration "Minimum pulse duration".

Parameters of the pulse width modulation (PWM) mode

Category	Parameter	Meaning	Value range	Default
Reaction to CPU STOP	Reaction to CPU STOP	The parameter "Output substitute value" generates a substitute value upon CPU STOP, which you can define with the parameter "Substitute value for pulse output (DQA)".	**Output substitute value**	Output substitute value
		The parameter "Continue operation" still generates the PWM output signal upon CPU STOP, which was generated before the CPU STOP.	**Continue operation**	
	Substitute value for pulse output (DQA)	If you have set the option "Output substitute value" for "Reaction to CPU STOP", the parameter "Substitute value for pulse output (DQA)" defines the substitute value to be used for the pulse output of the channel. If you have set the option "Continue operation" for "Reaction to CPU STOP", the parameter "Substitute value for pulse output (DQA)" cannot be selected	**0** (use substitute value 0)	0
			1 (use substitute value 1)	
Diagnostics interrupt	No supply voltage L+	The parameter "No supply voltage L+" activates the diagnostic interrupt of the channel in the case of no supply voltage L+	**Deactivated**	Deactivated
			Activated	
Parameter	High-speed output (0.1 A)	The "High-speed output (0.1 A)" parameter is used to specify whether you want to use the selected pulse output as high-speed output. Requirement for this is that the selected pulse output supports the operation as high-speed output.	**Deactivated** The output supports frequencies of up to 10 kHz (load dependent) and currents of up to 0.5 A or frequencies of up to 100 Hz and currents of up to 0.5 A depending on the performance capability of the selected output.	Deactivated
			Activated The output supports frequencies of up to 100 kHz and currents of up to 0.1 A.	
	Output format	Defines the format of the ratio value (on-load factor) in the field "OUTPUT_VALUE" of the control duration of the channel.	**S7 analog output** Interprets the ratio value in the field OUTPUT_VALUE" of the control interface 1/27648 of the current period duration. Supported value range from 0 to 27 648	Per 100
			Per 100 Interprets the ratio value in the field "OUTPUT_VALUE"of the control interface percentage value of the current period duration. Supported value range 0 to 100	

Category	Parameter	Meaning	Value range	Default
Parameter	Output format	Defines the format of the ratio value (on-load factor) in the field "OUTPUT_VALUE" of the control duration of the channel.	**Per 1,000** Interprets the ratio value in the field "OUTPUT_VALUE"of the control interface is a one-tenth percentage point of the current period duration. Supported value range from 0 to 1 000	Per 100
			Per 10,000 Interprets the ratio value in the field "OUTPUT_VALUE" of the control interface is a one-hundredth percentage point of the current period duration. Supported value range from 0 to 10 000	
	Minimum pulse duration	Defines the minimum pulse duration and the minimum interpulse period of the output signal of the channel. The channel suppresses all pulses and pauses that are below the specified value.	**0 µs to 10 000 000 µs (10 s)**	0 µs
	Period duration	Defines the period duration of the output signal of the channel in µs. In RUN, the user program can control the period duration via the control and feedback interface of the channel.	**x to 10 000 000 µs (10 s)** at 100 kHz hardware output (high-speed output (0.1 A) activated): 10 µs to 10 000 000 µs (10 s) at 10 kHz hardware output (high-speed output (0.1 A) deactivated): 100 µs to 10 000 000 µs (10 s) at 100 kHz hardware output (high-speed output (0.1 A) deactivated): 10 000 µs (10 ms) to 10 000 000 µs (10 s)	2 000 000 µs (2 s)
Hardware inputs / outputs	Pulse output (DQA)	The parameter "Pulse output (DQA)" defines the hardware output to use as pulse output channel.	For B: X11, terminal 21 (DQ0 / %Q4.0): 10 kHz / 0.5 A or 100 kHz / 0.1 A	Hardware output for the least significant address
			For B: X11, terminal 31 (DQ8 / %Q5.0): 100 Hz / 0.5 A	

Output signals for pulse width modulation (PWM) mode

Output signal	Meaning	Value range
Continuous pulse current at the digital output PWM DQA	A pulse is output at the digital output PWM DQA for the set on-load factor and cycle duration.	Continuous pulse current

4.2.1.2 Operating mode: Frequency output

In this operating mode you can assign a frequency value with high frequencies more precisely than by using period duration in PWM mode.

A rectangular signal with an assigned frequency and a constant on-load factor of 50 % is generated at the digital output.

The frequency output mode has the following functions:

- When the option "High-speed output (0.1 A)" is activated, you can generate a minimum pulse duration of 2 µs at a current of 100 mA. If the option "High-speed output (0.1 A)" is not activated, you can generate a minimum pulse duration of 20 µs with a load > 0.1 A and a minimum pulse duration of 40 µs with a load of ≥ 2 mA and a current of maximum 0.5 A.
  If you use a standard output, you can generate a minimum pulse duration of 400 µs with a load of > 0.1 A and a minimum pulse duration of 500 µs with a load of ≥ 2 mA and a current of max. 0.5 A.

	Minimum			Maximum		
	Standard output	**High-speed output deactivated**	**High-speed output activated**	**Standard output**	**High-speed output deactivated**	**High-speed output activated**
Frequency	0.1 Hz			100 Hz [1]	10 kHz [1]	100 kHz

[1] Load dependent

- You can control the pulse output (DQA) of the channel manually via the control and feedback interface.
- You can configure the reaction to CPU STOP. Upon change to CPU STOP, the pulse output (DQA) is set to the configured state.

Controller

For the frequency output mode, the user program directly accesses the control and feedback interface of the channel.

A reconfiguration via the instructions WRREC/RDREC and parameter assignment data record 128 is supported. You can find additional information in section Parameter data records (PWM) (Page 179).

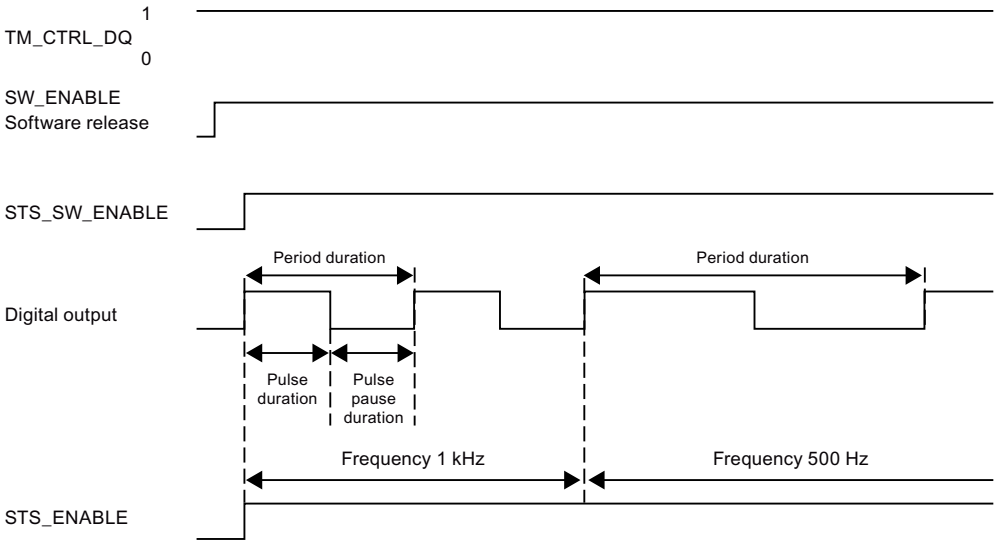

Figure 4-3 Pulse schematic

Starting the output sequence

The control program must initiate the enable for the output sequence with the help of the software enable (SW_ENABLE 0 → 1). The feedback bit STS_SW_ENABLE indicates that the software enable is pending at the pulse generator.

If the software enable is activated (rising edge), STS_ENABLE is set. The output sequence runs continuously, as long as SW_ENABLE is set.

NOTE

Output control signal TM_CTRL_DQ

- If TM_CTRL_DQ = 1, the technology function takes over the control and generates pulse sequences at the output PWM DQA.
- If TM_CTRL_DQ = 0, the user program takes over the control and the user can directly set the output PWM DQA via the control bit SET_DQA.

Canceling the output sequence

Deactivating the software enable (SW_ENABLE = 1 → 0) during the frequency output cancels the current output sequence. The last cycle duration is not completed. STS_ENABLE and the digital output PWM DQA are immediately reset to 0.

A renewed pulse output is only possible after a restart of the output sequence.

Setting and changing the output value (frequency)

You set the frequency with the OUTPUT_VALUE directly with the control program in the control interface. The value is specified in the real format and the unit is always "Hz". The possible range depends on the parameter "High-speed output (0.1 A)" as follows:

- High-speed pulse output deactivated
  - Frequency (OUTPUT_VALUE) 0.1 Hz to 10,000 Hz
- High-speed pulse output activated
  - Frequency (OUTPUT_VALUE) 0.1 Hz to 100,000 Hz
- Standard output (100 Hz output)
  - Frequency (OUTPUT_VALUE) 0.1 Hz to 100,000 Hz

The new frequency is applied at the start of the next period. The new frequency has no impact on the falling edge or the pulse-cycle ratio. However, the application can take up to 10 s depending on the previously set frequency.

Accuracy of the output frequency

The configured output frequency is output with a frequency-dependent accuracy at the digital output PWM DQA. You can find an overview of the accuracy as a function of the frequency used in the section Interconnection overview of outputs (Page 108).

Parameters of the frequency output mode

Category	Parameter	Meaning	Value range	Default
Reaction to CPU STOP	Reaction to CPU STOP	The parameter "Output substitute value" generates a substitute value upon CPU STOP, which you can define with the parameter "Substitute value for pulse output (DQA)".	**Output substitute value**	Output substitute value
		The parameter "Continue operation" still generates the frequency output signal upon CPU STOP, which was generated before the CPU STOP.	**Continue operation**	
	Substitute value for pulse output (DQA)	If you have set the option "Output substitute value" for "Reaction to CPU STOP", the parameter "Substitute value for pulse output (DQA)" defines the substitute value to be used for the pulse output of the channel. If you have set the option "Continue operation" for "Reaction to CPU STOP", the parameter "Substitute value for pulse output (DQA)" cannot be selected.	**0** (use substitute value 0)	0
			1 (use substitute value 1)	
Diagnostics interrupt	No supply voltage L+	The parameter "No supply voltage L+" activates the diagnostic interrupt of the channel in the case of no supply voltage L+	**Deactivated**	Deactivated
			Activated	

Category	Parameter	Meaning	Value range	Default
Parameter	High-speed output (0.1 A)	The "High-speed output (0.1 A)" parameter is used to specify whether you want to use the selected pulse output as high-speed output. Requirement for this is that the selected pulse output supports the operation as high-speed output.	**Deactivated** The output supports frequencies of up to 10 kHz (load dependent) and currents of up to 0.5 A or frequencies of up to 100 Hz and currents of up to 0.5 A depending on the performance capability of the selected output.	Deactivated
			Activated The output supports frequencies of up to 100 kHz and currents of up to 0.1 A.	
	Output format	Defines the value for the frequency output in the field "OUTPUT_VALUE" of the control duration of the channel.	**1 Hz** Interprets the value of the frequency output in the field "OUTPUT_VALUE" as frequency with the unit Hz.	1 Hz
Hardware inputs / outputs	Pulse output (DQA)	The parameter "Pulse output (DQA)" is used to define the hardware output that you want to use as pulse output channel.	For B: X11, terminal 21 (DQ0 / %Q4.0): 10 kHz / 0.5 A or 100 kHz / 0.1 A	Hardware output for the least significant address
			For B: X11, terminal 31 (DQ8 / %Q5.0): 100 Hz / 0.5 A	

Output signals for frequency output mode

Output signal	Meaning	Value range
Continuous pulse current at the digital output PWM DQA	A pulse for the assigned frequency is output at the digital output PWM DQA.	Continuous pulse current

4.2.1.3 Operating mode: PTO

The PTO (Pulse Train Output) mode can be used to output position information. This allows you to, for example, control stepper motor drives or simulate an incremental encoder. The frequency of the pulses represents the speed, while the number of pulses represents the distance. The direction can also be specified by using two signals per channel. You can use a PTO channel for setpoint output (drive) for an axis technology object.

PTO mode is divided into the following four signal types:

- PTO (pulse (A) and direction (B)): If you select the PTO signal type (pulse (A) and direction (B)), an output (A) controls the pulses and an output (B) controls the direction. B is 'High' (active) when pulses are generated in a negative direction. B is 'Low' (inactive) when pulses are generated in a positive direction.

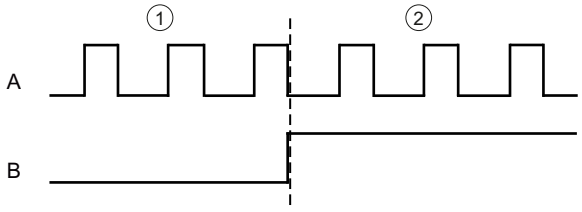

① Positive direction of rotation
② Negative direction of rotation

- PTO (Count Up (A) and Count Down (B)): When you select PTO when you select the PTO signal type (count up (A) and count down (B)), an output (A) outputs pulses for positive directions and another output (B) outputs pulses for negative directions.

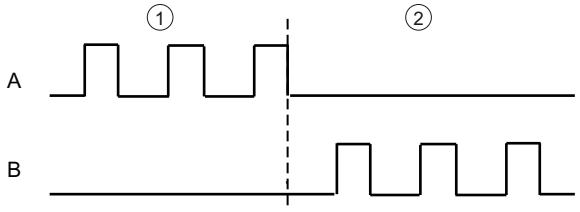

① Positive direction of rotation
② Negative direction of rotation

- PTO (A, B phase-shifted): When you select the PTO signal type (A, B phase-shifted), the two outputs pulses with the specified velocity, but phase-shifted by 90 degrees. This is a 1x combination in which the pulse shows the duration between two positive transitions of A. In this case the direction is determined based on the output which first changes from 0 to 1. With positive direction, A preceeds B. With negative direction B preceeds A.

The number of generated pulses is based on the number of 0-to-1 transitions from phase A. The phase ratio determines the direction of motion:

PTO (A, B phase-shifted)	
Phase A precedes phase B (positive motion)	Phase A follows phase B (negative motion)
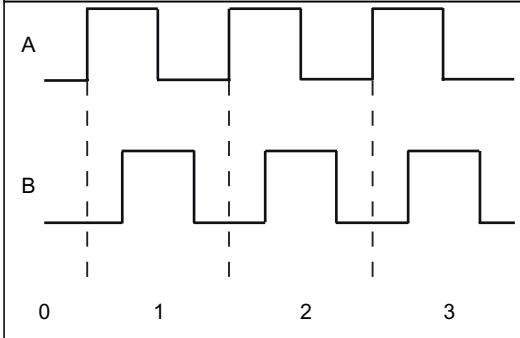 Figure	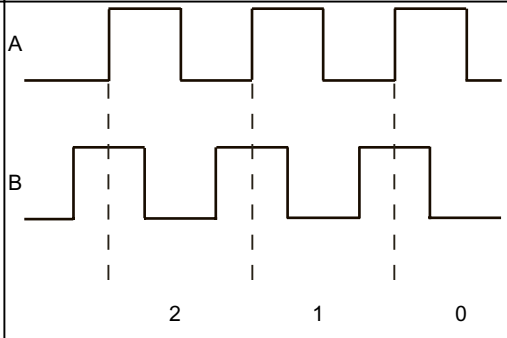 Figure
Number of pulses	Number of pulses

- PTO (A, B phase-shifted - quadruple): When you select the PTO signal type (A, B phase-shifted, quadruple), the two outputs transmit pulses with the specified velocity, but phase-shifted by 90 degrees. The quadruple signal type is a 4x configuration in which each edge transition corresponds to an increment. Therefore, a full period of the signal A contains four increments. In this way two outputs, each with 100 kHz signal frequency, can be used to output a control signal that supplies 400,000 increments per second. The direction is determined based on the output which first changes from 0 to 1. With positive direction, A preceeds B. With negative direction B preceeds A.

PTO (A, B phase-shifted - quadruple)	
Phase A precedes phase B (positive motion)	Phase A follows phase B (negative motion)
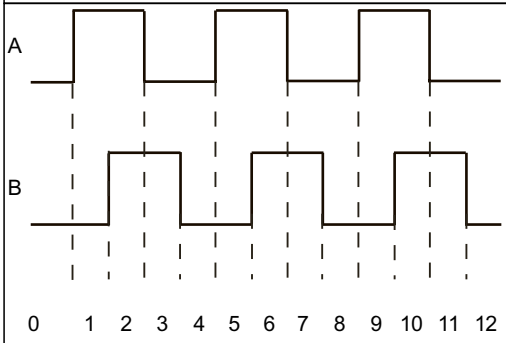 Figure	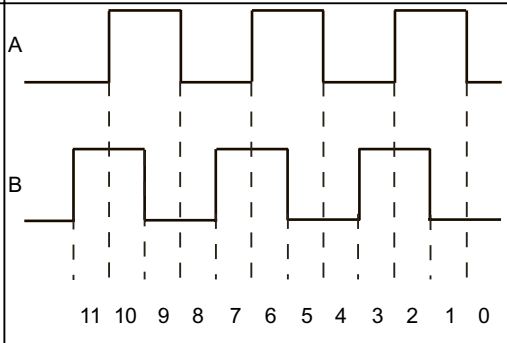 Figure
Number of pulses	Number of pulses

Parameters of PTO mode

Category	Parameter	Meaning	Value range	Default
Diagnostics interrupt	No supply voltage L+	With the parameter "No supply voltage L+" you activate the diagnostic interrupt of the channel in the case of no supply voltage L+.	Deactivated Activated	Deactivated
Data exchange with the drive	Reference speed	With the parameter "Reference speed" you define the reference value for the drive velocity. The drive velocity is defined as percentage value of the reference speed in the range from -200 % to +200 %.	Floating-point number: 1.0 bis 20,000.0 (rpm)	3,000.0 (rpm)
	Maximum speed	The parameter "Maximum speed" is used to define the required maximum speed for your application.	The supported value range depends on: • the signal type selected under "Operating mode" • the value defined under "Increments per revolution" • the value defined under "Reference speed" The low limit of the value range is: • for the signal type "PTO (A, B phase-shifted - quadruple)": 0.1 Hz * 60 s/min * 4) / Increments per revolution • for the non-quadruple PTO signal types: (0.1 Hz * 60 s/min) / increments per revolution The high limit of the value range is the minimum of the value: • 2 * reference speed and of the value: • for the signal type "PTO (A, B phase-shifted - quadruple)": (100 000 Hz * 60 s/min * 4) / increments per revolution • for the non-quadruple PTO signal types: (100 000 Hz * 60 s/min) / increments per revolution	3,000.0 (rpm)
	Increments per revolution	The "Increments per revolution" is used to define the number of increments per revolution (also in microstep mode), which is required by the drive for a revolution.	1 to 1,000,000	200

Category	Parameter	Meaning	Value range	Default
Fine resolution	Bits in incr. actual value (G1_XIST1)	The parameter defines the number of bits for the coding of the fine resolution in the current incremental value of G1_XIST1.	0	0
Stop behavior	Quick stop time	The parameter "Quick stop time" defines the time interval it should take for the drive to go from the maximum speed to a standstill (OFF3).	1 to 65 535 (ms)	1,000 (ms)
Hardware inputs / outputs	Reference switch input	The parameter "Reference switch input" defines the hardware input of the reference switch.	[Input address of the reference switch DI]	--
	Edge selection reference switch	The parameter "Edge selection reference switch" defines the edge type which is to be detected by the reference switch.	Rising edge	Rising edge
			Falling edge	
	Measuring input	The parameter "Measuring input" defines the hardware input of the measuring input.	[Input address of the measuring input DI]	--
	"Drive ready" input	The parameter ""Drive ready" input" defines the hardware input of the input "Drive ready".	[Input addresses of the inputs "Drive ready" DIn]	--
	Pulse output A for "PTO (pulse (A) and direction (B))"	The parameter "Pulse output A" defines the hardware output for PTO signal A.	[Output address DQ for PTO signal A (output frequency 100 kHz)]	grayed out Read only access to the parameter
	Direction output B for "PTO (pulse (A) and direction B))"	The parameter "Direction output B" defines the hardware output for PTO signal B.	[Output address 1 of the DQ for PTO signal B (output frequency 100 kHz)]	Qn (output frequency 100 kHz)
			[Output address 2 of the DQ for PTO signal B (output frequency 100 Hz)]	
	Clock generator forward (A) for "PTO (Count up (A) and Count down (B))"	The "Clock generator forward (A)" parameter defines the hardware output for PTO signal A.	[Output address DQ for PTO signal A (output frequency 100 kHz)]	grayed out Read only access to the parameter
	Clock generator backward (B) for "PTO (Count up (A) and Count down (B))"	The "Clock generator backward (B)" parameter defines the hardware output for PTO signal B.	[Output address 1 of the DQ for PTO signal B (output frequency 100 kHz)]	grayed out Read only access to the parameter

Category	Parameter	Meaning	Value range	Default
Hardware inputs / outputs	Phase A for "PTO (A, B phase-shifted)" and "PTO (A, B phase-shifted, quadruple)"	The "Clock generator output (A)" parameter defines the hardware output for PTO signal A.	[Output address of the DQ for PTO signal A (output frequency 100 kHz)]	grayed out Read only access to the parameter
	Phase B for "PTO (A, B phase-shifted)" and "PTO (A, B phase-shifted, quadruple)"	The "Clock generator output (B)" parameter defines the hardware output for PTO signal B.	[Output address 1 of the DQ for PTO signal B (output frequency 100 kHz)]	grayed out Read only access to the parameter
	Drive enable output	The parameter "Drive enable output" defines the hardware output of the output "Drive enable output".	[Output addresses of the enable output DQn (output frequency 100 Hz)	--

WARNING

Digital input as a measuring input

If you configure a digital input as a measuring input, the value which the digital input returns via the input data of the "DI 16/DQ 16" is not reliable. If you configure a hardware interrupt on this input it can trigger sporadically without a rising or falling edge actually existing.

Reaction of the PTO channel to CPU STOP

The PTO channel reacts to a change to CPU STOP with the removal of the drive enable (to the extent that the drive enable output is configured) and with output of the velocity setpoint 0 at the hardware outputs configured for the signal tracks A and B. The CPU STOP reaction of the PTO channels cannot be configured.

NOTE

Reaction to CPU STOP

Upon CPU STOP, the hardware outputs assigned for the PTO outputs A and B can switch to signal state 'High' (1) and/or remain there. A switching/remaining of the two hardware outputs to/in signal level 'Low' (0) is not guaranteed.

Controller

The pulse output channels for the four modes of the pulse generators (PTO) are controlled using Motion Control via the technology objects TO_SpeedAxis, TO_PositioningAxis and TO_SynchronousAxis. With these operating modes, the control and feedback interface of the channels is a partial implementation of the PROFIdrive interface "Telegram 3". For a detailed description of the use of motion control and its configuration, refer to the S7-1500/S7-1500T Motion Control Function Manual (https://support.industry.siemens.com/cs/ww/en/view/109766459) and the STEP 7 online help.

4.2.2 Functions

4.2.2.1 Function: High-speed output

The function "High-speed output (0.1 A)" enhances the signal clock of the digital outputs (DQ0 to DQ7). Less delay, fluctuation, jitter, and shorter rise and fall times, occur at the switching edges.

The function "High-speed output (0.1 A)" is suited for generating pulse signals in a more precise clock, but provides a lower maximum load current.

For the PWM and frequency output modes, select the high-speed output of the channel in STEP 7 (TIA Portal). You can also change the parameter assignment during runtime with the help of the program via the data record.

High-speed pulse output (high-speed output) is available for the following operating modes:

- PWM
- Frequency output
- PTO (the pulse outputs for the PTO mode are always "High-speed output (0.1 A)")

High-speed output

	Minimum		Maximum	
	High-speed output deactivated	**High-speed output activated**	**High-speed output deactivated**	**High-speed output activated**
Pulse duration	20 µs with load > 0.1 A [1] 40 µs with load ≥ 2 mA [1]	2 µs [1]	10,000,000 µs (10 s)	
Period duration	100 µs [2]	10 µs		
Frequency	0.1 Hz		10 kHz [2]	100 kHz

1) A lower value is theoretically possible but, depending on the connected load, the output voltage can no longer be output as complete rectangular pulse

2) Load dependent

4.2.2.2 Function: Direct control of the pulse output (DQA)

Direct control of the pulse output (DQA)

In the modes "Pulse width modulation PWM" and "Frequency output", you can set the pulse output (DQA) of a pulse generator directly via the control program. Select the function for the DQ direct control by deleting the output control bit of the PWM channel (TM_CTRL_DQ = 0) in the control interface.

The direct control of the pulse output (DQA) can be helpful when commissioning a control system for automation.

When you select the direct control of the pulse output (DQA) during a pulse output sequence, the sequence continues to run in the background so that the output sequence is continued as soon as the channel takes control again (by setting TM_CTRL_DQ = 1).

You assign the status of the pulse output (DQA) using the control bits SET_DQA.

When you set TM_CTRL_DQ = 1, you deselect the direct control of the pulse output (DQA) and the channel takes over the processing. If the output sequence is still running (STS_ENABLE

still active), the PWM channel takes over the control of the output again. If TM_CTRL_DQ = 1 and STS_ENABLE is not active, the module's channel also takes over processing, but then outputs "0".

NOTE

Output signal TM_CTRL_DQ of the PWM channel

- If TM_CTRL_DQ = 1, the technology function takes over the control and generates pulse sequences at the output PWM DQA.
- If TM_CTRL_DQ = 0, the user program takes over the control and the user can set the PWM DQA directly using the control bits SET_DQA.

4.2.3 Configuring the PWM and frequency output modes

4.2.3.1 Assignment of the control interface

The user program influences the behavior of the PWM channel through the control interface.

Control interface per channel

The following table shows the control interface assignment:

Table 4-5 Assignment of the control interface

	7	6	5	4	3	2	1	0
Byte 0	OUTPUT_VALUE PWM: On-load factor * (Int) In PWM mode, the on-load factor uses only the two least significant bytes (byte 2 and byte 3). Frequency output: Frequency in Hz (Real)							
Byte 1								
Byte 2								
Byte 3								
Byte 4	SLOT							
Byte 5								
Byte 6								
Byte 7								
Byte 8	Reserved = 0			MODE_SLOT	LD_SLOT Specifies the meaning of the value under SLOT			
					0000: No action			
					0001: Period duration (PWM)			
					0010 to 1111: Reserved			
Byte 9	Reserved = 0		Reserved = 0	Reserved = 0	SET_DQA	Reserved = 0	TM_CTRL_DQ	SW_ENABL-E
Byte 10	Reserved = 0							RES_ERROR
Byte 11	Reserved = 0							

* The terms "On-load factor", "Pulse duty factor" and "Duty factor" can be used synonymously

Use case

1. Transfer the control for the output to the PWM channel.
2. Set SW_ENABLE, in order that the output can be started.
3. Set the required on-load factor using OUTPUT_VALUE.
4. If necessary, change the period duration (cyclic or once). If you do not change the value, the period duration from the hardware configuration will be used.
5. With TM CTRL_DQ and SET_DQ set the output from the user program permanently to 1 or 0.
6. Acknowledge any errors that occur using RES_ERROR.

Additional parameters for the output sequence are defined before the start of an output sequence.

The data record of the parameter assignment is changed in the device configuration in STEP 7 (TIA Portal) or through WRREC execution.

Control interface parameters

OUTPUT_VALUE

The interpretation of the value OUTPUT_VALUE depends on the set operating mode. OUTPUT_VALUE is always updated. When an invalid value is detected (outside the permissible range), the error memory bit ERR_OUT_VAL is set until a valid value is detected. During the error condition the invalid value is ignored and the PWM channel continues with the last valid OUTPUT_VALUE. Note that, in the frequency output mode, it is also possible that no last valid value is available. In this case the pulse output returns the value 0, i.e. there is no pulse output.

Please note that the on-load factor is not checked in PWM mode. If the on-load factor is greater than the format permits, the PWM channel uses a ratio of 100 %. 0 % in effect for values < 0.

SLOT, MODE_SLOT and LD_SLOT

Use these control interface fields if you occasionally change the period duration in PWM mode before the start of the output sequence or during operation. You can find a description of the interaction between SLOT, MODE_SLOT and LD_SLOT under Handling the SLOT parameter (control interface) (Page 69)

SW_ENABLE

If 0 → 1, activate the output sequence.

TM_CTRL_DQ

- If 1, the output is controlled by the PWM channel and generates the pulse sequences
- If 0, the output is controlled directly by the program using the SET_DQA assignments

SET_DQA

- If 1, set the output A to 1, if TM_CTRL_DQ is inactive
- If 0, set the output A to 0, if TM_CTRL_DQ is inactive

RES_ERROR

Resetting the error bit memory ERR_LD in the feedback interface

4.2.3.2 Handling the SLOT parameter (control interface)

SLOT and MODE_SLOT

SLOT has the following operating modes.

- **Mode for individual update (MODE_SLOT = 0)**
  Use this mode if you occasionally change the specific parameters (such as period duration) before the start of the output sequence or during operation.
  - The value in SLOT is the always applied when the value changes in LD_SLOT.
  - The acknowledgment bit STS_LD_SLOT in the feedback interface is switched.
  - The value of LD_SLOT defines the interpretation of SLOT (see the table below "Interpretation of the SLOT parameter value").
  - If the LD_SLOT value is invalid, the setting of the feedback bit ERR_LD indicates a parameter assignment error. The user has to reset the error using the control bit RES_ERROR and enable the SLOT parameter again for the next value.
  - Changes made in this mode can be read back by the channel in the parameter assignment data record.
  - The current changes are entered in the data record 128 during the reading back of the parameter assignment data with RDREC from the user program. These changes are lost during a warm restart of the CPU.
- **Mode for cyclic updating (MODE_SLOT = 1)**Use this operating mode if the program is to continuously control another parameter in addition to the main parameter to be controlled.
  - The value in SLOT is transferred with each module cycle.
  - No acknowledgment bit is available.
  - The value of LD_SLOT defines the interpretation of SLOT (see the table below "Interpretation of the SLOT parameter value").
  - If the value in SLOT is not valid, the error ERR_SLOT_VAL occurs. The error is automatically reset as soon as a valid value is loaded.
  - In this mode the value in the parameter assignment data record is not updated. If LD_SLOT is changed in this mode, the last value applied from LD_SLOT is valid.
  - The mode for permanent updating can be stopped by setting LD_SLOT to 0 and MODE_SLOT to 0. By stopping the mode for permanent updating the changes made at the parameters during the permanent updating are retained until the next changes via SLOT (cyclic or once) or until the next STOP-RUN transition.

Interpretation of the SLOT parameter value

The value written in the SLOT parameter is displayed as in the table below depending on the LD_SLOT value and the mode is interpreted.

LD_SLOT	Meaning of SLOT value	Valid modes for using the SLOT value	SLOT data type
0	No action / idling	All operating modes	
1	Period duration	PWM	UDInt Permissible value range*: Minimum value: 10 µs, 100 µs or 10 000 µs (10 ms) Maximum value: 10 000 000 µs (10 s)

* The permissible value range depends on the selected hardware output and sometimes on the high-speed mode (high-speed/standard).

Individual updating of the parameter 'Period duration'

The following representation illustrates the workflow of the individual updating of the parameter 'Period duration'. The described workflow principle can also be used on the channels of the high-speed counters.

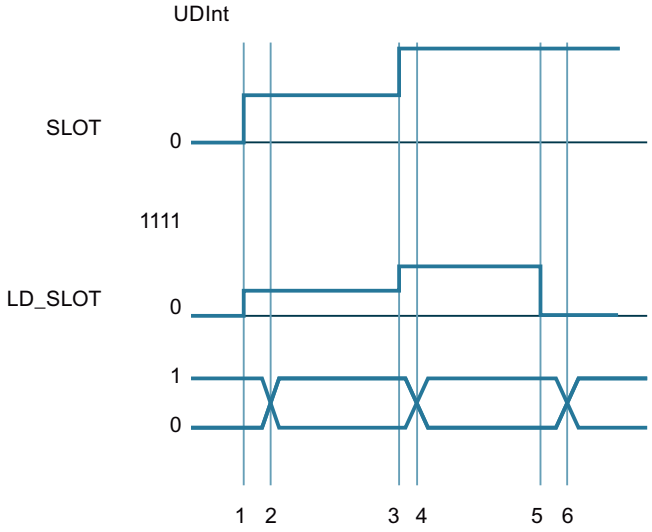

① User writes the first parameter in SLOT and specifies the first parameter in LD_SLOT
② Technology channel applies the first parameter and indicates the application by change in the bit STS_LD_SLOT
③ User writes the second parameter in SLOT and specifies the second parameter in LD_SLOT
④ Technology channel applies the second parameter and indicates the application by change in the bit STS_LD_SLOT
⑤ User writes 0 in LD_SLOT, (SLOT inactive)
⑥ Technology channels answers change in LD_SLOT with a change in STS_LD_SLOT

Figure 4-4 Individual updating

Note that the following requirements apply to the representation shown above:

- The value MODE_SLOT must be set to 0
- Errors or invalid values are shown in the feedback bit ERR_SLOT_VAL
- The error must be acknowledged

If MODE_SLOT 0 = 1, the following applies (for PWM mode only):

- The value in SLOT is continuously evaluated according to LD_SLOT
- STS_LD_SLOT does not change
- An error is automatically reset as soon as a valid value is set in SLOT

Cyclic updating of the parameter 'Period duration'

The following representation illustrates the execution of the cyclic updating of the parameter 'Period duration'. The described workflow principle can also be used on the channels of the high-speed counters.

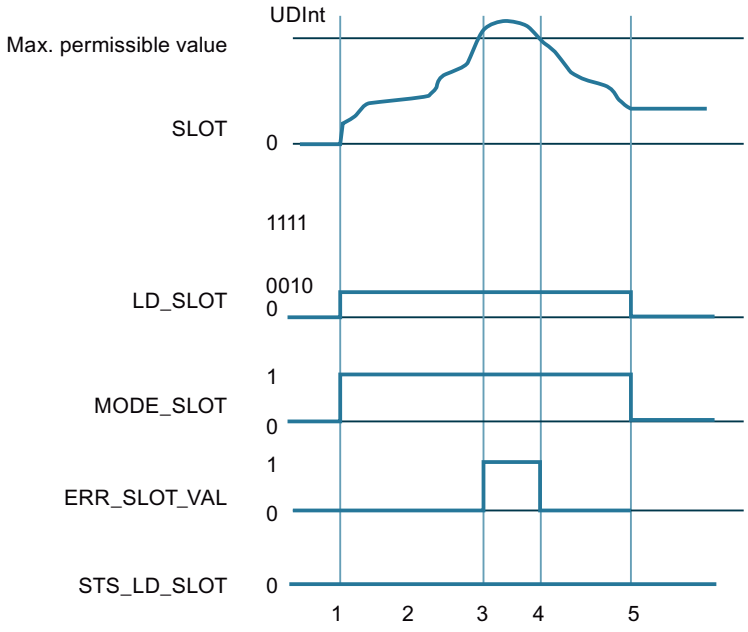

① • User sets SLOT to the required parameter
• User sets MODE_SLOT to 1
• User sets LD_SLOT to the required value (1 for period duration)

② User changes value in SLOT continuously and technology channel evaluates continuously

③ Value in SLOT exceeds permitted limit, technology channel shows this ERR_SLOT_VAL and continues working with the last valid value

④ Value in SLOT again in permitted range, technology channel resets ERR_SLOT_VAL independently and continues working with the value in SLOT

⑤ User resets LD_SLOT and MODE_SLOT, technology channel continues to work with last value

Figure 4-5 Cyclic updating

4.2.3.3 Assignment of the feedback interface

The user program receives current values and status information from the pulse width modulation via the feedback interface.

Feedback interface per channel

The following table shows the feedback interface assignment:

Table 4-6 Assignment of the feedback interface

	7	6	5	4	3	2	1	0
Byte 0	ERR_SLOT_VAL The valid in SLOT is invalid	ERR_OUT_VAL The value in OUTPUT_VALUE is invalid	Reserved = 0	Reserved = 0	ERR_PULSE	ERR_LD Error during loading via control interface	Reserved = 0	ERR_PWR missing supply voltage L+
Byte 1	Reserved = 0		STS_SW_ENABLE SW_ENABLE detected or feedback status SW_ENABLE	STS_READY Channel parameters assigned and ready	Reserved = 0	STS_LD_SLOT Load prompt detected and executed for Slot (toggling)	Reserved = 0	
Byte 2	Reserved = 0			Reserved = 0	Reserved = 0	Reserved = 0	STS_DQA	STS_ENABLE
Byte 3	Reserved = 0				Reserved = 0			

Feedback parameters

Table 4-7 Status feedback

Feedback parameters	Meaning	Value range
STS_READY	The channel is correctly configured, is operating and supplying valid data.	0: Not ready to run 1: Ready to run
STS_SW_ENABLE	Current status of the software enable	0: SW_ENABLE is not active 1: SW_ENABLE detected
STS_LD_SLOT	Acknowledgment bit for each action of the SLOT in the SLOT mode for individual updating (for a description of the acknowledgment bit, refer to the section Handling the SLOT parameter (control interface) (Page 69)).	Each switching of this bit represents a successful LD_SLOT action.
STS_ENABLE	The output sequence is active. (STS_ENABLE always depends on the status of the software enable STS_SW_ENABLE ab)	0: No output sequence running 1: Output sequence running
STS_DQA	State of the pulse output (DQA)	0: Pulse output is not active 1: Pulse output is active

Feedback parameters	Meaning	Value range
ERR_PWR	No supply voltage L+	0: No error 1: Error
ERR_LD	Error during loading of a parameter value in the operating mode for individual updating	0: No error 1: Error
ERR_OUT_VAL	The value in OUTPUT_VALUE is invalid	0: No error 1: Error
ERR_SLOT_VAL	The value in SLOT is invalid, where MODE_SLOT = 1 (permanent updating)	0: No error 1: Error

Wiring

5

5.1 Supply voltage

24 V DC supply voltage (X80)

The connecting plug for the supply voltage is plugged in when the CPU ships from the factory.

The following table shows the signal names and the descriptions of the pin assignment of the 24 V DC supply voltage.

Table 5-1 Pin assignment 24 V DC supply voltage

View Connector	Signal name [1]		Description
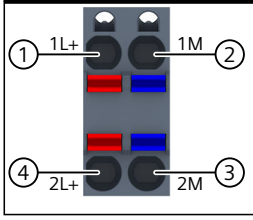	1	1L+	+ 24 V DC of the supply voltage
	2	1M	Ground of the supply voltage
	3	2M	Ground of the supply voltage for loop-through [2]
	4	2L+	+ 24 V DC of the supply voltage for loop-through [2]

[1] 1L+ and 2L+ as well as 1M and 2M are bridged internally

[2] Maximum 10 A permitted

If the CPU is supplied by a system power supply, it is not necessary to connect the 24 V supply.

5.2 PROFINET interfaces

PROFINET interface X1 with 2-port switch (X1 P1R and X1 P2R)

The assignment corresponds to the Ethernet standard for an RJ45 plug.

- When autonegotiation is deactivated, the RJ45 socket is allocated as a switch (MDI-X).
- When autonegotiation is activated, autocrossing is in effect and the RJ45 socket is allocated either as data terminal equipment (MDI) or a switch (MDI-X).

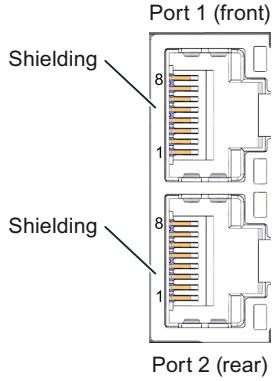

Figure 5-1 PROFINET ports

NOTE

You need a screwdriver (max. blade width 2.5 mm) to remove the PROFINET plug.

Remove display

You can find a description of how to remove and replace the display in the S7-1500, ET 200MP (http://support.automation.siemens.com/WW/view/en/59191792) System Manual.

Reference

For more information on "Wiring the CPU" and "Accessories/spare parts", refer to the S7-1500, ET 200MP System Manual (http://support.automation.siemens.com/WW/view/en/59191792).

Assignment of the MAC addresses

The CPU 1512C-1 PN has a PROFINET interface with two ports. The PROFINET interface itself has a MAC address, and each of the two PROFINET ports has its own MAC address. The CPU 1512C-1 PN therefore has three MAC addresses in total.

The MAC addresses of the PROFINET ports are needed for the LLDP protocol, for example for the neighborhood discovery function.

The number range of the MAC addresses is continuous. The first and last MAC address are lasered on the rating plate on the right side of each CPU 1512C-1 PN.

The table below shows how the MAC addresses are assigned.

Table 5-2 Assignment of the MAC addresses

	Assignment	**Labeling**
MAC address 1	PROFINET interface X1 (visible in STEP 7 for accessible devices)	• Front, lasered • Right side, lasered (start of number range)
MAC address 2	Port X1 P1R (required for LLDP, for example)	• Front and right side, not lasered
MAC address 3	Port X1 P2R (required for LLDP, for example)	• Front, not lasered • Right side, lasered (end of number range)

5.3 Terminal and block diagrams

5.3.1 Block diagram of the CPU part

Block diagram

The following figure shows the block diagram of the CPU part.

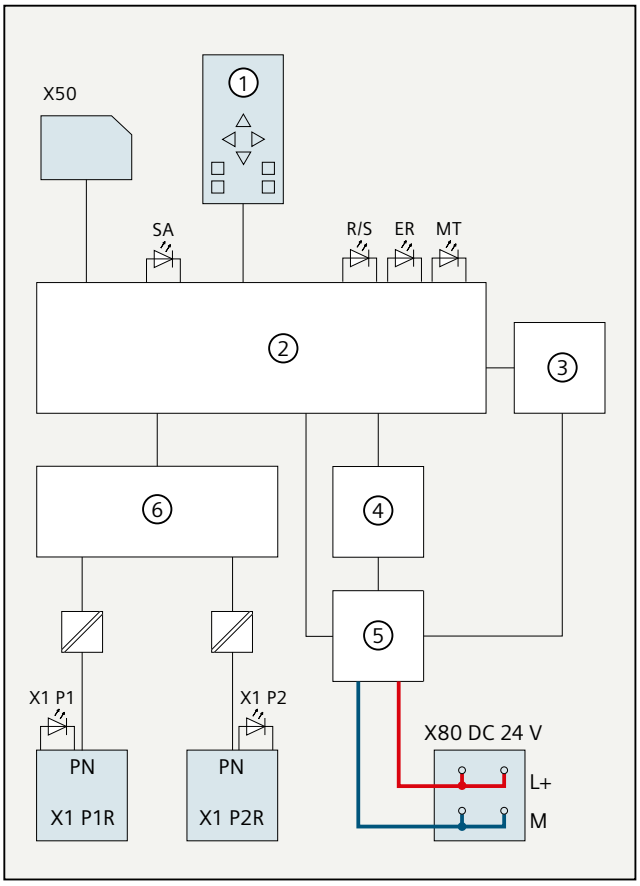

①	CPU with control and operating mode buttons	PN X1 P2R	PROFINET interface X1 port 2
②	Electronics	L+	24 V DC supply voltage
③	Interface to on-board I/O	M	Ground
④	Backplane bus interface	SF	STOP ACTIVE LED (yellow)
⑤	Internal supply voltage	R/S	RUN/STOP LED (yellow/green)
⑥	2-port switch	ER	ERROR LED (red)
X50	SIMATIC Memory Card	MT	MAINT LED (yellow)
X80 24 V DC	Infeed of supply voltage	X1 P1, X1 P2	Link TX/RX LED
PN X1 P1R	PROFINET interface X1 port 1		

Figure 5-2 Block diagram of the CPU part

5.3.2 Terminal and block diagram of the analog on-board I/O

This section contains the block diagram of the analog on-board I/O (X10) and various wiring options.
For information on wiring the front connector, establishing the cable shield, etc., refer to the S7-1500, ET 200MP (http://support.automation.siemens.com/WW/view/en/59191792) system manual.

NOTE

You can use and combine the different wiring options for all channels. Note, however, that unneeded terminals of an analog input channel must not be connected.

Definition

U_n+/U_n-	Voltage input channel n (voltage only)
M_n+/M_n-	Measuring input channel n (only resistance-type transmitters or thermal resistors (RTD))
I_n+/I_n-	Current input channel n (current only)
$I_{c\,n}+/I_{c\,n}-$	Current output for RTD, channel n
QV_n	Voltage output channel
QI_n	Current output channel
M_{ANA}	Reference potential of the analog circuit
CHx	Channel or display of the channel status

Infeed element

The infeed element is inserted on the front connector and serves to shield the analog on-board I/O.

NOTE

The analog on-board I/O does not require power to be supplied by the infeed element. The infeed element is, however, necessary for shielding.

Wiring: Voltage measurement

The following figure shows the terminal assignment for voltage measurement at the channels available for this measurement type (channels 0 to 3).

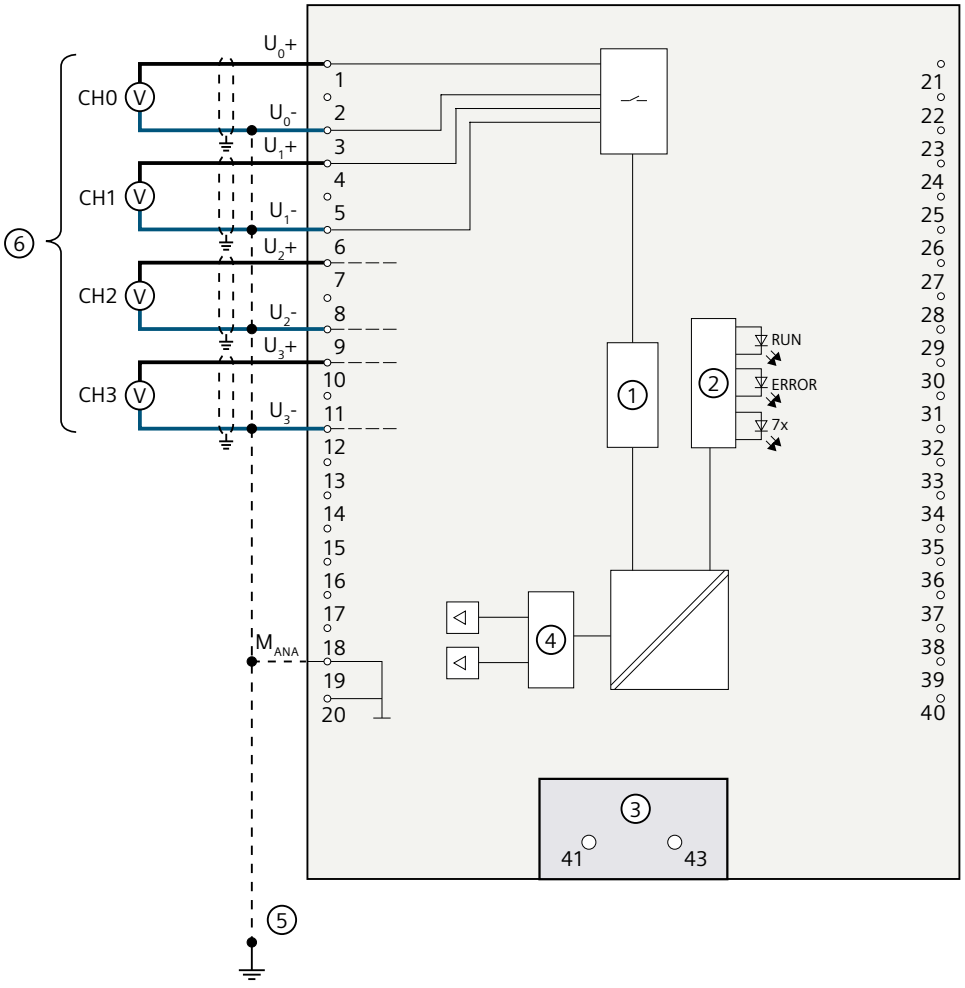

① Analog-to-digital converter (ADC)
② LED interface
③ Infeed element (for shielding only)
④ Digital-to-analog converter (DAC)
⑤ Equipotential bonding cable (optional)
⑥ Voltage measurement

Figure 5-3 Block diagram and terminal assignment for voltage measurement

Wiring: 4-wire measuring transducer for current measurement

The following figure shows the terminal assignment for current measurement with 4-wire measuring transducer at the channels available for this measurement type (channels 0 to 3).

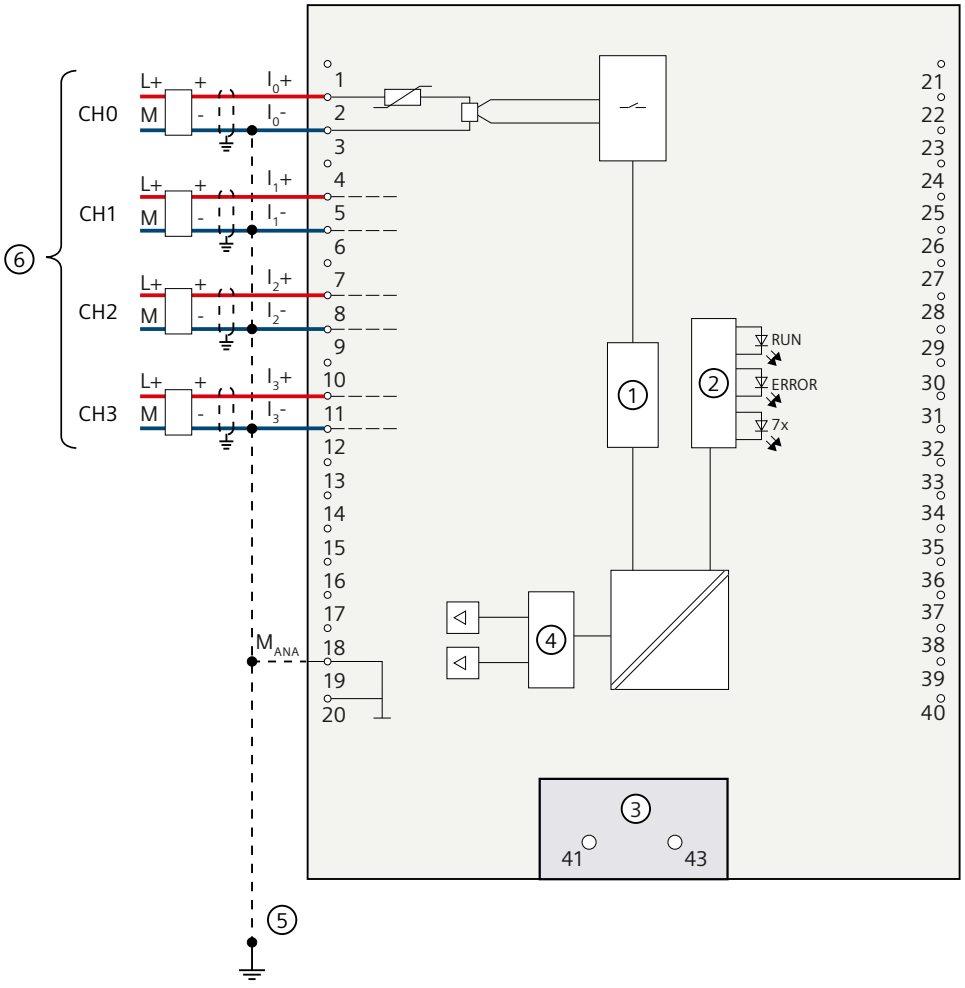

① Analog-to-digital converter (ADC)
② LED interface
③ Infeed element (for shielding only)
④ Digital-to-analog converter (DAC)
⑤ Equipotential bonding cable (optional)
⑥ Connector 4-wire measuring transducer

Figure 5-4 Block diagram and terminal assignment for current measurement with 4-wire measuring transducer

Wiring: 2-wire measuring transducer for current measurement

Alternatively to connecting a 4-wire transducer, you can also connect 2-wire transducers to channels 0 to 3. An external 24 V power supply is required to connect a 2-wire transducer to the analog on-board I/O of the compact CPU. Feed this voltage short-circuit proof to the 2-wire transducer. Use a fuse to protect the power supply unit.

NOTICE
Defective transducers Note that the analog input of the transducer is not protected against destruction in the event of a defect (short circuit). Take the necessary precautions against such cases.

The figure below shows an example of the connection of a 2-wire transducer to channel 0 (CH0) of the analog on-board I/O.

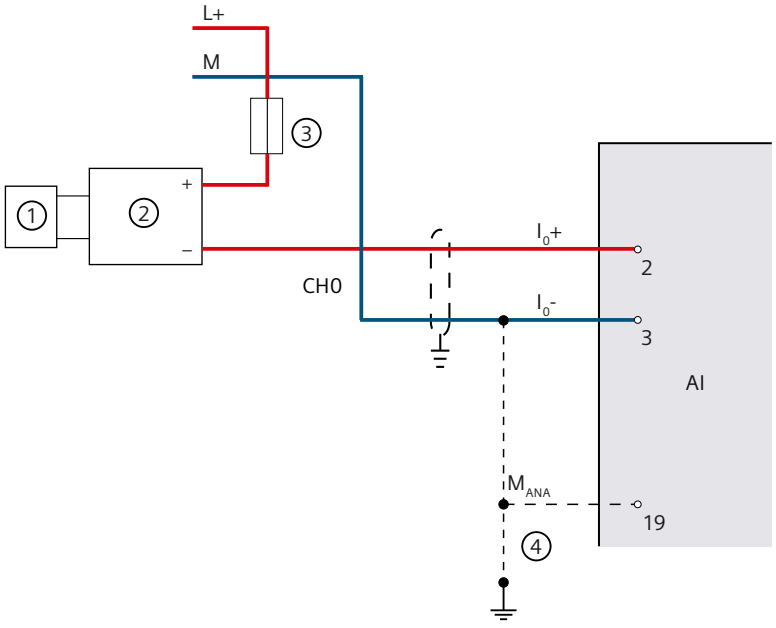

① Sensor (e.g. pressure gauge)
② 2-wire transducer
③ Fuse
④ Equipotential bonding cable (optional)

Figure 5-5 2-wire transducer at channel 0

Use the measurement type "Current (4-wire transducer)" and the measuring range 4 to 20 mA for the parameter assignment of the 2 wire transducer in STEP 7 (TIA Portal).

Wiring: 4-wire connection of resistance-type sensors or thermal resistors (RTD)

The following figure shows the terminal assignment for 4-wire connection of resistance-type sensors or thermal resistors at the channel available for this (channel 4).

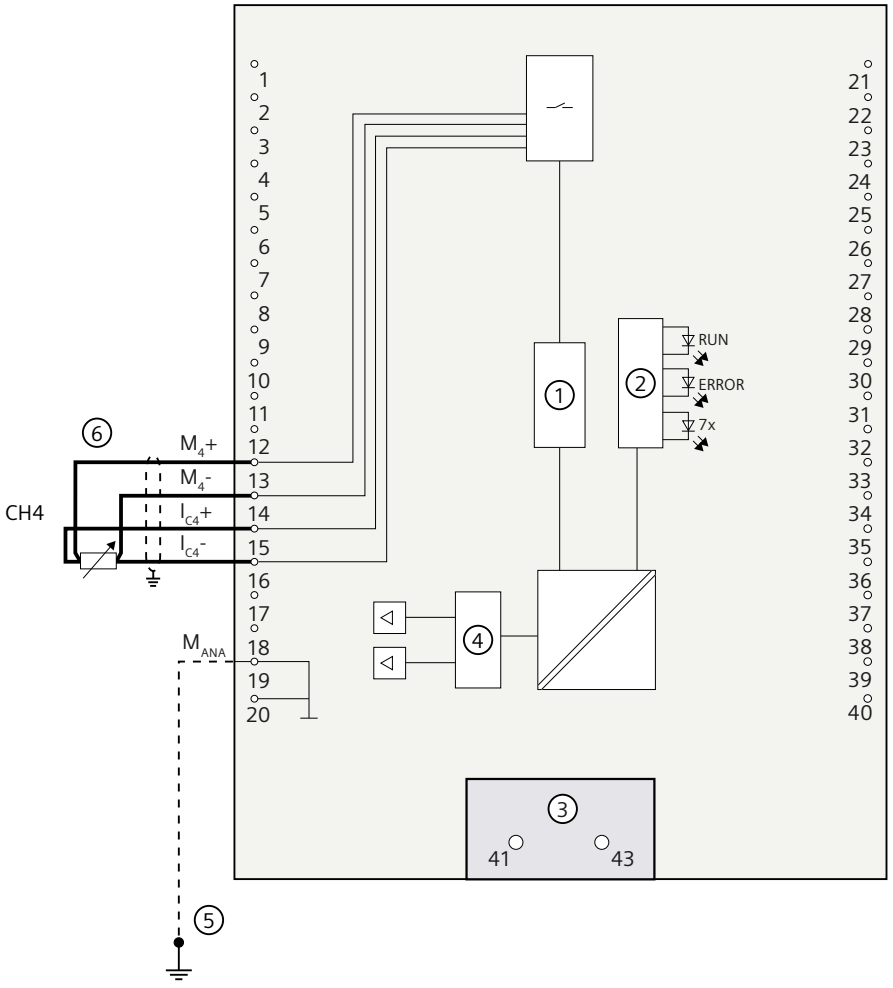

① Analog-to-digital converter (ADC)
② LED interface
③ Infeed element (for shielding only)
④ Digital-to-analog converter (DAC)
⑤ Equipotential bonding cable (optional)
⑥ 4-wire connection

Figure 5-6 Block diagram and terminal assignment for 4-wire connection

Wiring: 3-wire connection of resistance-type sensors or thermal resistors (RTD)

The following figure shows the terminal assignment for 3-wire connection of resistance-type sensors or thermal resistors at the channel available for this (channel 4).

NOTE

3-wire connection

Note that line resistances are not compensated with a 3-wire connection.

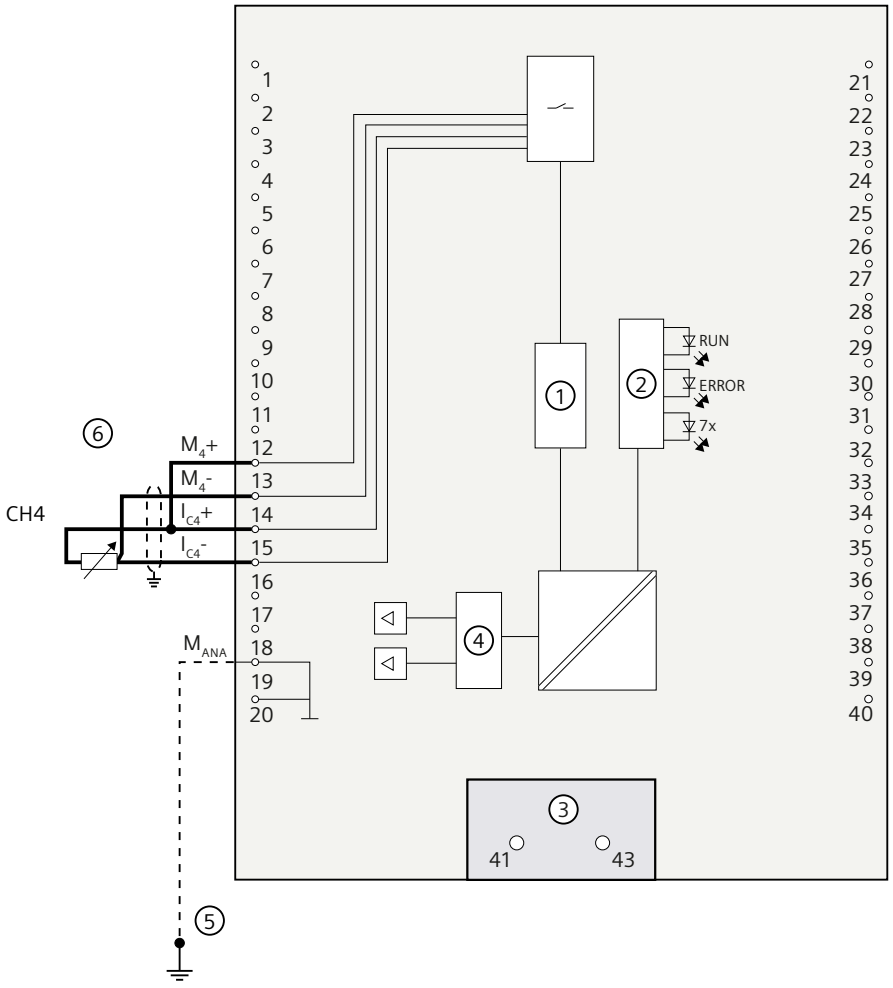

① Analog-to-digital converter (ADC)
② LED interface
③ Infeed element (for shielding only)
④ Digital-to-analog converter (DAC)
⑤ Equipotential bonding cable (optional)
⑥ 3-wire connection

Figure 5-7 Block diagram and terminal assignment for 3-wire connection

Wiring: 2-wire connection of resistance-type sensors or thermal resistors (RTD)

The following figure shows the terminal assignment for 2-wire connection of resistance-type sensors or thermal resistors at the channel available for this (channel 4).

NOTE

2-wire connection

Note that line resistances are not compensated with a 2-wire connection.

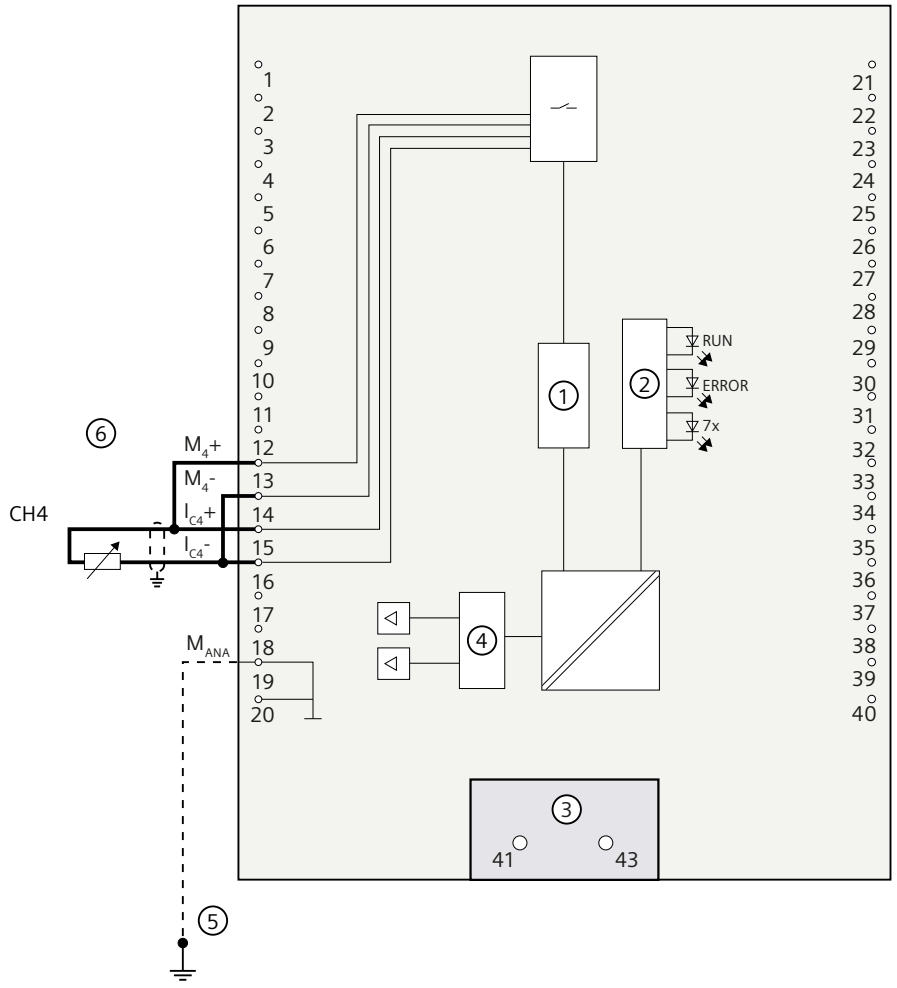

① Analog-to-digital converter (ADC)
② LED interface
③ Infeed element (for shielding only)
④ Digital-to-analog converter (DAC)
⑤ Equipotential bonding cable (optional)
⑥ 2-wire connection

Figure 5-8 Block diagram and terminal assignment for 2-wire connection

Wiring: Voltage output

The figure below shows the terminal assignment for the wiring of the voltage outputs with:

- 2-wire connection, no compensation for line resistances.

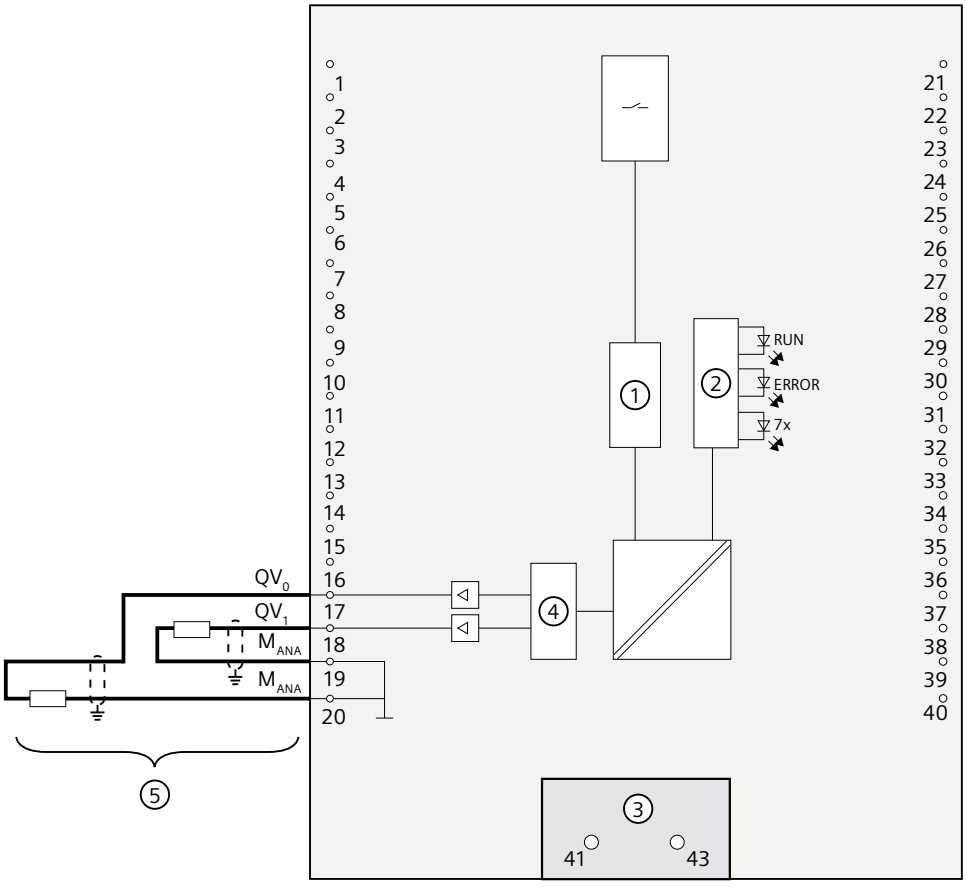

① Analog-to-digital converter (ADC)
② LED interface
③ Infeed element (for shielding only)
④ Digital-to-analog converter (DAC)
⑤ 2-wire connection CH0 and CH1

Figure 5-9 Block diagram and terminal assignment for voltage output

NOTE

M_{ANA} on terminals 19 and 20 is equivalent.

Wiring: Current output

The following figure shows an example of the terminal assignment for wiring current outputs.

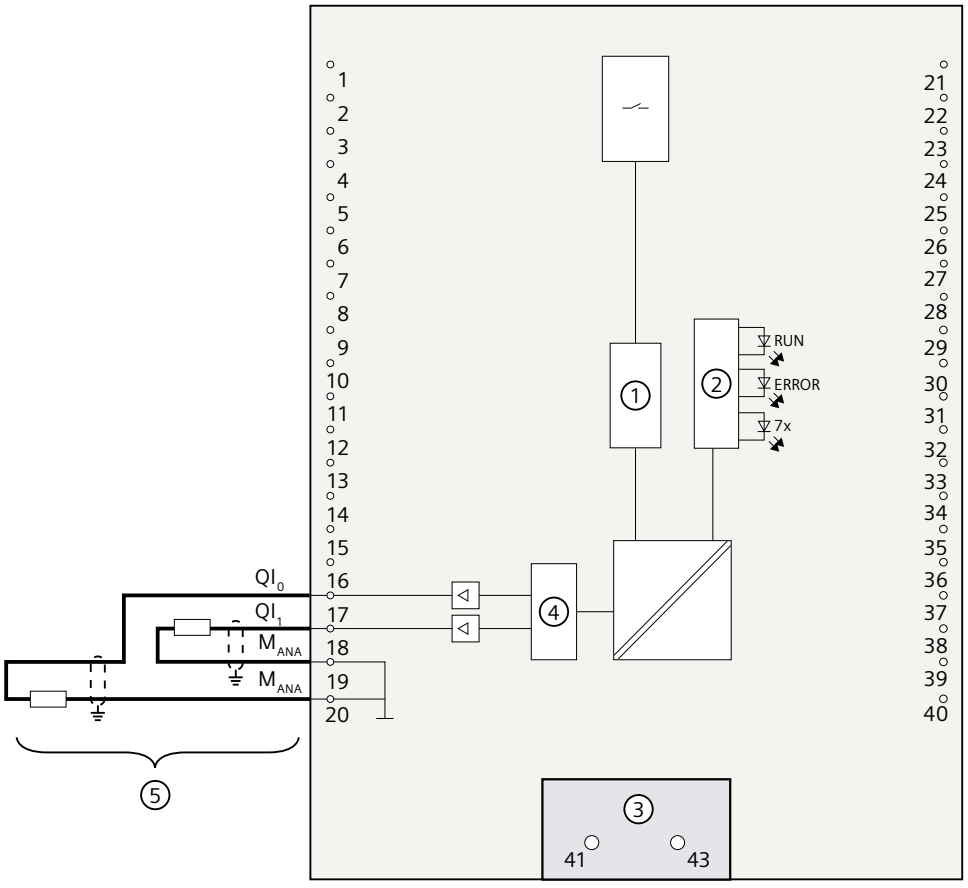

① Analog-to-digital converter (ADC)
② LED interface
③ Infeed element (for shielding only)
④ Digital-to-analog converter (DAC)
⑤ Current output CH0 and CH1

Figure 5-10 Block diagram and terminal assignment for current output

NOTE

M_{ANA} on terminals 19 and 20 is equivalent.

5.3.3 Terminal and block diagram of the digital on-board I/O

This section contains the block diagram of the digital on-board I/O (X11 and X12) with standard inputs and outputs and the encoder supply, as well as the rules for the correct wiring of the ground connections.

For information on wiring the front connector, establishing the cable shield, etc., refer to the S7-1500, ET 200MP (http://support.automation.siemens.com/WW/view/en/59191792) System Manual.

NOTICE

Electromagnetic compatibility

The high-frequency switching (> 30 kHz) of the 24 V outputs generates electromagnetic feedback on the supply network. In order to comply with the limit values that correspond to the current state of the art, plan for a corresponding filter for the 24 V supply. The interference radiation measurements were carried out with filters of the type "EPCOS-C B84113C". Use this type of filter, or a filter with the same characteristic curve or with a characteristic curve with greater attenuation.

Possible filters, depending on the load:

- 3 A: B84113C0000B030
- 6 A: B84113C0000B060
- 10 A: B84113C0000B110

The figure below shows how to integrate the filter in the 24 V supply.

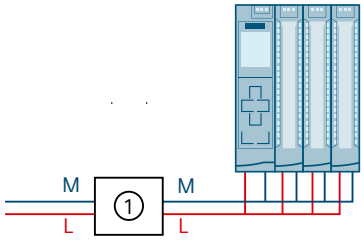

① Filters, depending on the load:

Figure 5-11 Connection of a filter for the 24 V supply.

NOTICE

Signal influences through reflections

When using fast outputs with the technology functions, the input signals may be influenced through reflection depending on the connected load and the cable length. To determine whether your application may be affected, note the following characteristic curve for a typical digital input.

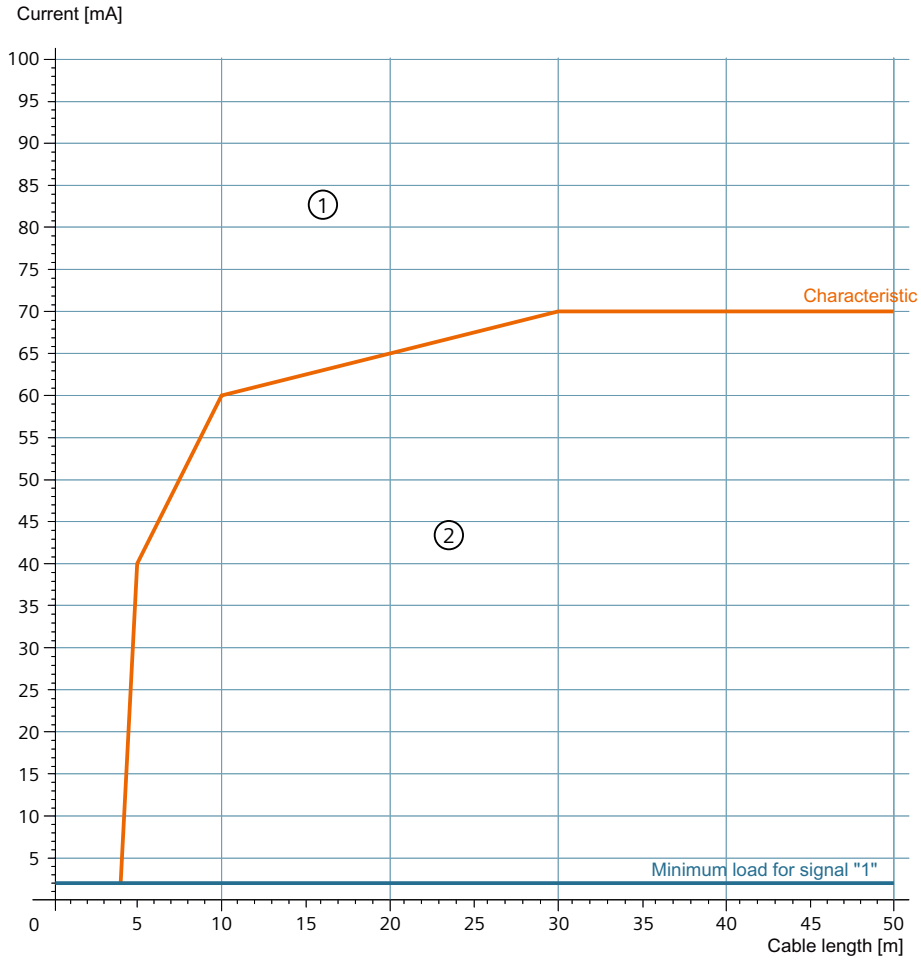

① No diode required

② Diode required

Figure 5-12 Characteristic curve of a typical digital input

If your application lies below the characteristic curve and faulty pulses are detected by the receiver, the installation of a Siemens diode (8WH2003-5CF00) is recommended. The figure below shows how to connect the diode.

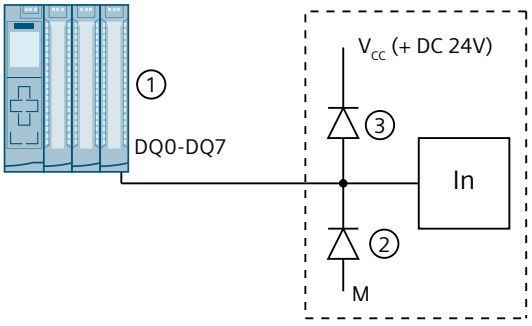

① CPU 1512C with used technology function

② Diode

③ Diode (may be omitted when using a Siemens diode (8WH2003-5CF00) for ②)

Figure 5-13 Installation of a diode before the input

Alternatively you can also suppress the interfering signals (reflections) through the selection of a suitable input filter. For example, with an input filter of approx. 5 µs or 200 kHz.

Infeed element

The infeed element is inserted on the front connector and serves to shield the digital on-board I/O.

NOTE

The digital on-board I/O is supplied via the front connector terminals and therefore does not require power to be supplied by the infeed element. The infeed element is, however, necessary for shielding.

Output driver

The digital onboard I/O uses the following output drivers:

- X11, DQ0 to DQ7: Push-pull stage and freewheeling diode
- X11, DQ8 to DQ15: High-side switch and freewheeling diode
- X12 DQ0 to DQ7: High-side switch without freewheeling diode
- X12 DQ8 to DQ15: High-side switch without freewheeling diode

Block diagram and terminal assignment X11

The figure below shows you how to connect the digital on-board I/O X11 and the assignment of the channels to the addresses (input byte a and b, output byte c and d).

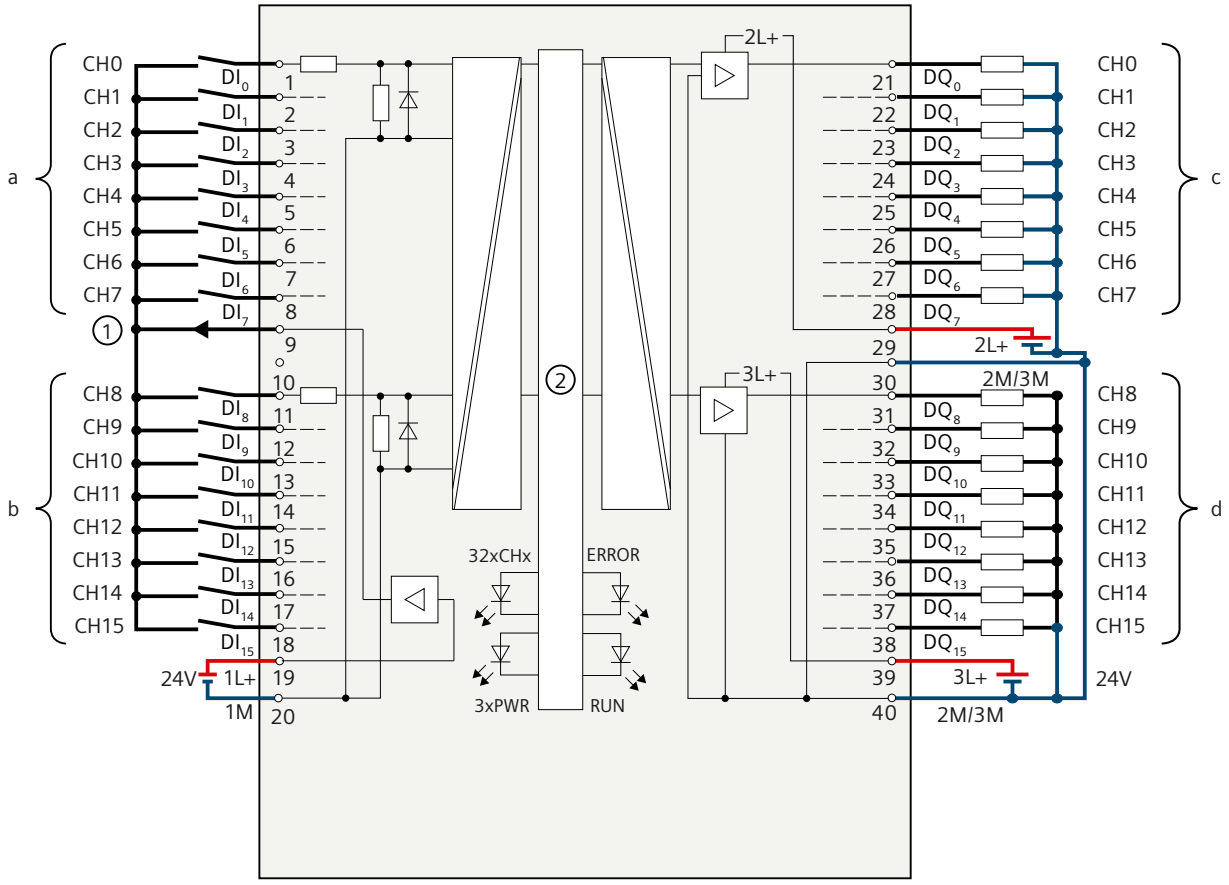

①	Encoder supply for the digital inputs
②	CPU interface
xL+	Connection for 24 V DC supply voltage
xM	Connection for ground
CHx	Channel or channel status LED (green)
RUN	Status display LED (green)
ERROR	Error display LED (red)
PWR	POWER supply voltage LED (green)

Figure 5-14 Block diagram and terminal assignment of the digital on-board I/O X11

Block diagram and terminal assignment X12

The figure below shows you how to connect the digital on-board I/O X12 and the assignment of the channels to the addresses (input byte a and b, output byte c and d).

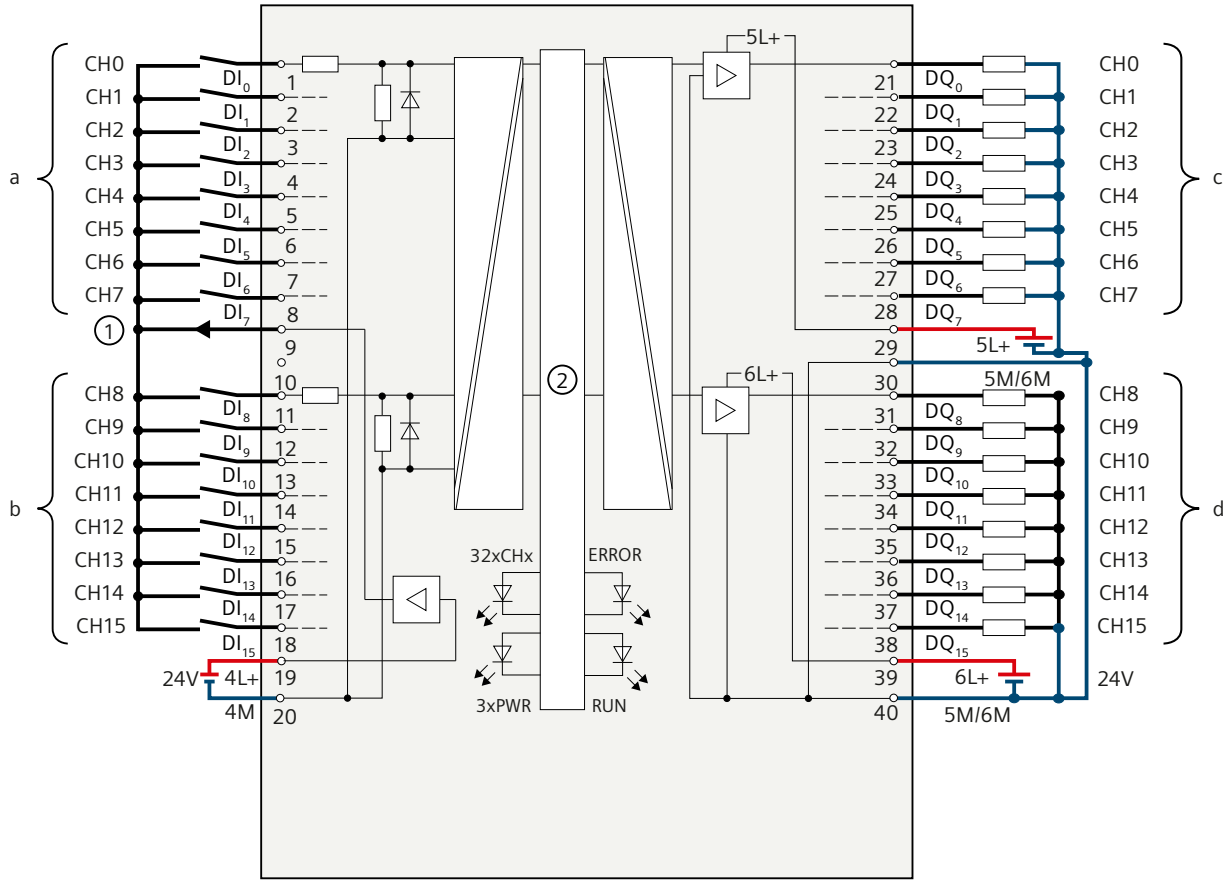

①	Encoder supply for the digital inputs
②	CPU interface
xL+	Connection for 24 V DC supply voltage
xM	Connection for ground
CHx	Channel or channel status LED (green)
RUN	Status display LED (green)
ERROR	Error display LED (red)
PWR	POWER supply voltage LED (green)

Figure 5-15 Block diagram and terminal assignment of the digital on-board I/O X12

Supply voltage using the digital on-board I/O X11 as an example

The inputs and outputs of the digital on-board I/O are divided into two load groups, which are supplied with 24 V DC.

The digital inputs DI0 to DI15 form a load group and are supplied via the connections 1L+ (terminal 19) and 1M (terminal 20).

The digital outputs DQ0 to DQ7 are supplied via the connection 2L+ (terminal 29). The digital outputs DQ8 to DQ15 are supplied via the connection 3L+ (terminal 39). Please note that the digital outputs DQ0 to DQ15 only have a common ground. In each case, they are led through to the two terminals 30 and 40 (2M/3M) and bridged in the module. The digital outputs form a common load group.

NOTICE
Polarity reversal of the supply voltage An internal protective circuit protects the digital on-board I/O against destruction if the polarity of the supply voltage is reversed. In the case of polarity reversal of the supply voltage, however, unexpected states can occur at the digital outputs.

Response of the digital outputs to a wire break at ground connection of the outputs

Due to the characteristics of the output driver used in the module, approx. 25 mA supply current flows out through the outputs via a parasitic diode in the event of a ground wire break. This behavior can lead to non-set outputs also carrying high levels and emitting up to 25 mA output current. Depending on the type of load, 25 mA can be sufficient to control the load with high level. To prevent unintended switching of the digital outputs in the event of a ground wire break, follow these steps:

Wire to ground twice

Connect ground to terminal 30 and to terminal 40.

1. Route the first ground connection from terminal 30 to the central ground connection of the plant.
2. Route the second ground connection from terminal 40 to the central ground connection of the plant.

If terminal 30 or 40 are interrupted by a ground wire break, the outputs will continue to be supplied via the second, intact ground connection.

⚠ WARNING
Wire break at ground connection **Never** bridge from terminal 30 to terminal 40 in the front connector and **never** lead only one wire to the central ground connection. Connect terminal 30 and terminal 40 to a common ground point.

As a supplement to the block diagram and terminal assignment, the following figure shows the correct wiring of the outputs in order to prevent switching of the outputs in the event of a ground wire break.

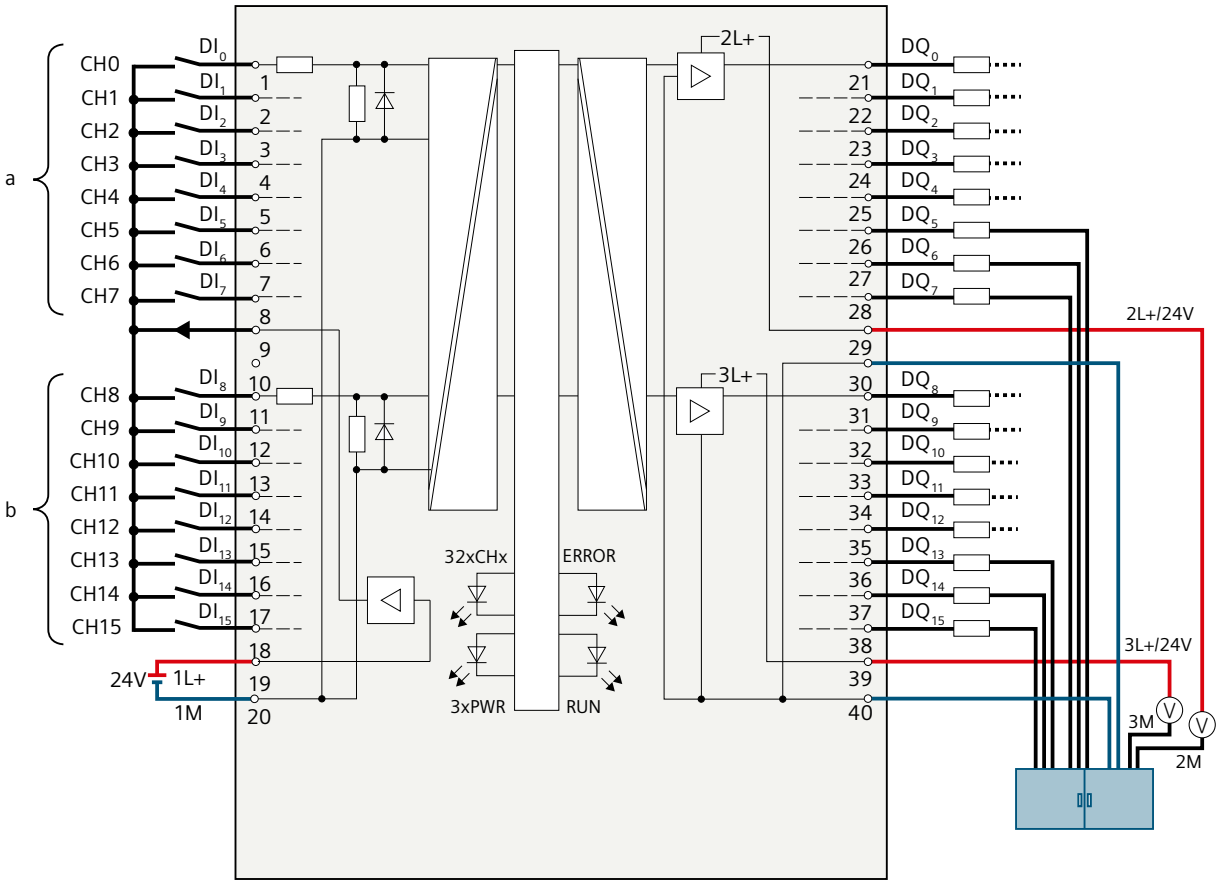

Figure 5-16 Correct wiring using the digital on-board I/O X11 as an example

The ground is supplied with a first cable from the central terminal block to terminal 30 of the module and additionally with a second cable also from the central terminal block to terminal 40 of the module.

At the digital outputs, each of the ground connections of the loads is connected with a separate cable for each load to the central terminal block.

The figure below shows the current flow with correct wiring.

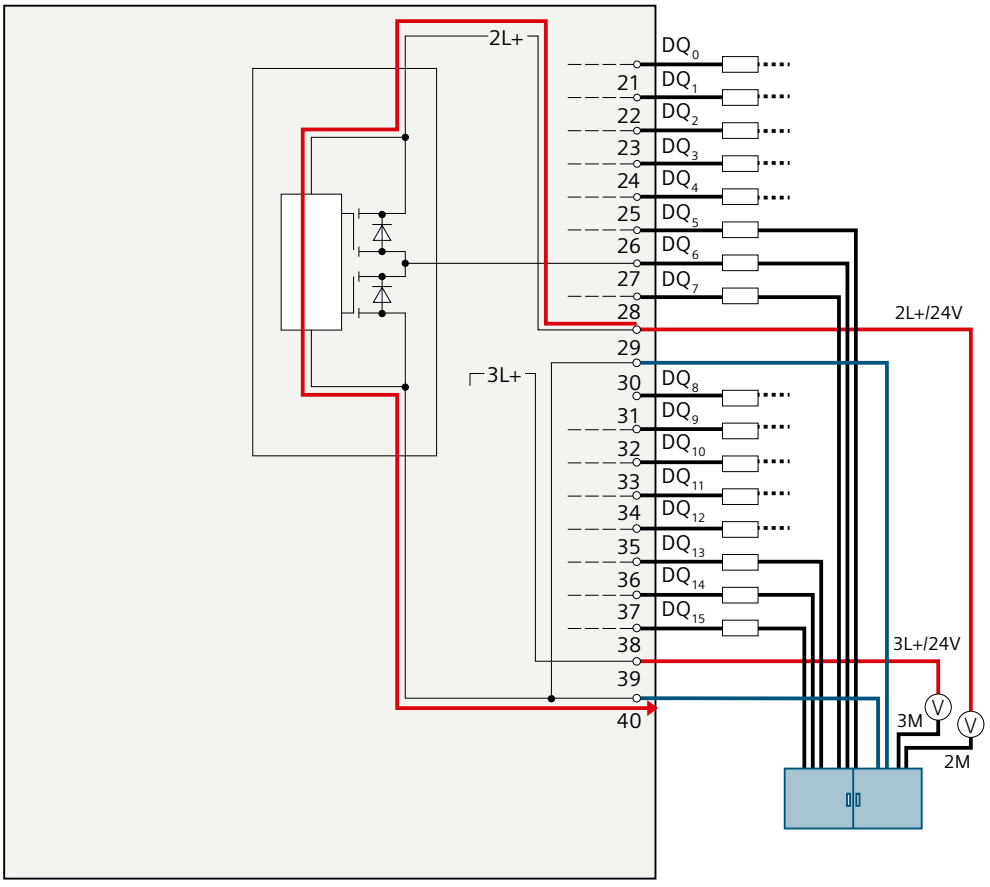

Figure 5-17 Current flow with correct wiring using the digital on-board I/O X11 as an example

With correct wiring, the supply current flows from the power supply 2L+ via terminal 29 to the module. In the module, the current flows via the output driver and exits the module via terminal 40.

The figure below shows the reaction to interruption of the first ground cable.

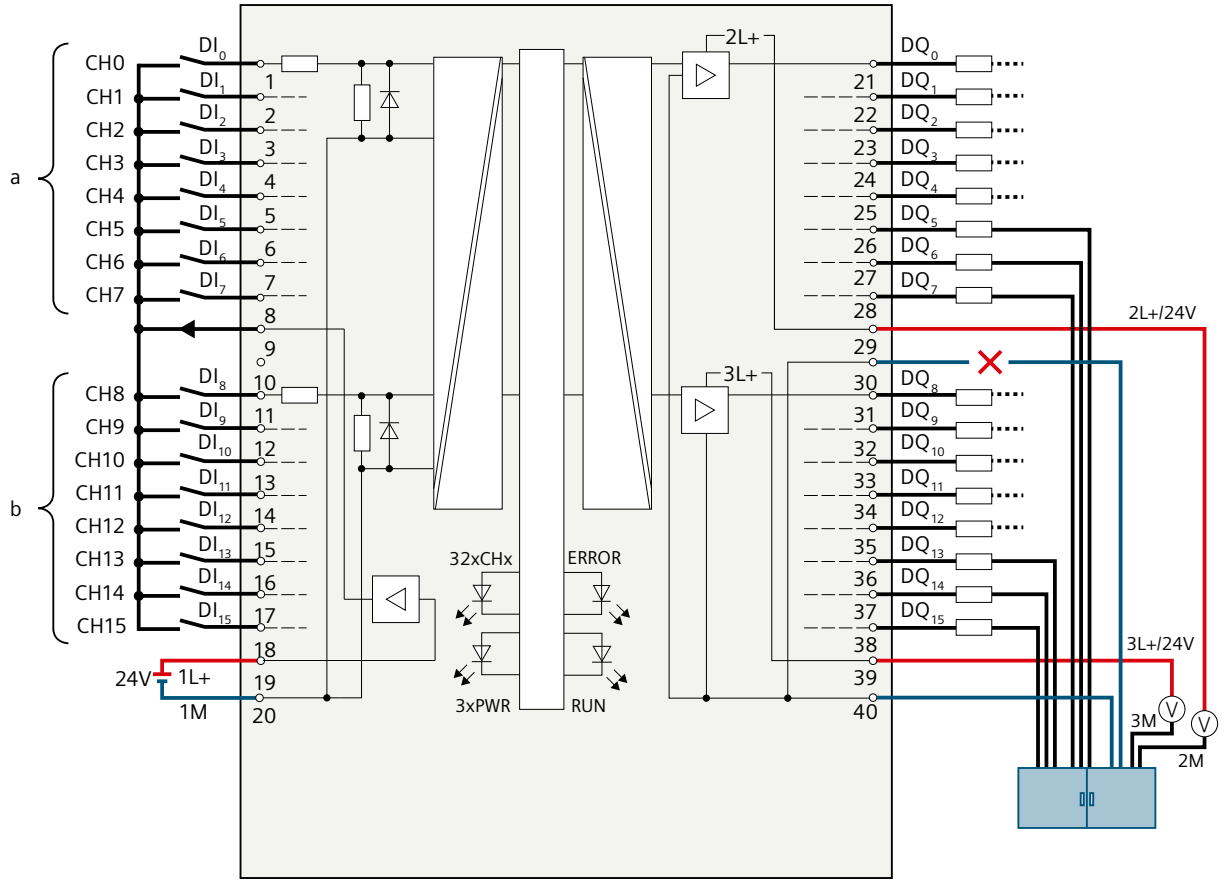

Figure 5-18 Interruption of the first ground cable using the digital on-board I/O X11 as an example

If a wire break occurs on the first ground cable from the central terminal block to terminal 30, the module can continue to operate without restrictions, as it is still connected to the ground via the second cable from the central terminal block to terminal 40.

The figure below shows the reaction to interruption of the second ground cable.

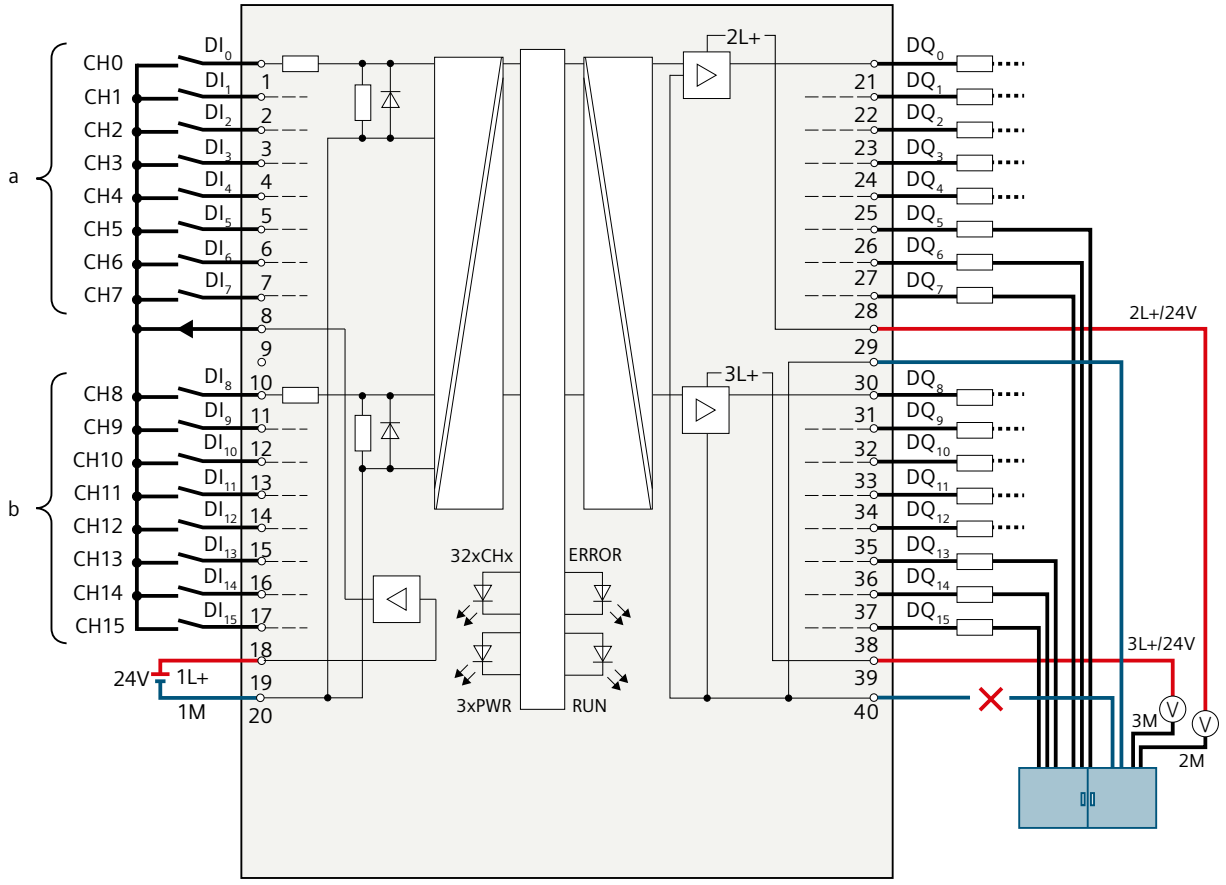

Figure 5-19 Interruption of the second ground cable using the digital on-board I/O X11 as an example

If a wire break occurs on the second ground cable from the central block terminal to terminal 30, the module can continue to operate without restrictions, as it is still connected to the ground via the first cable from the central terminal block to terminal 40.

The figure below shows the current flow upon interruption of both ground cables.

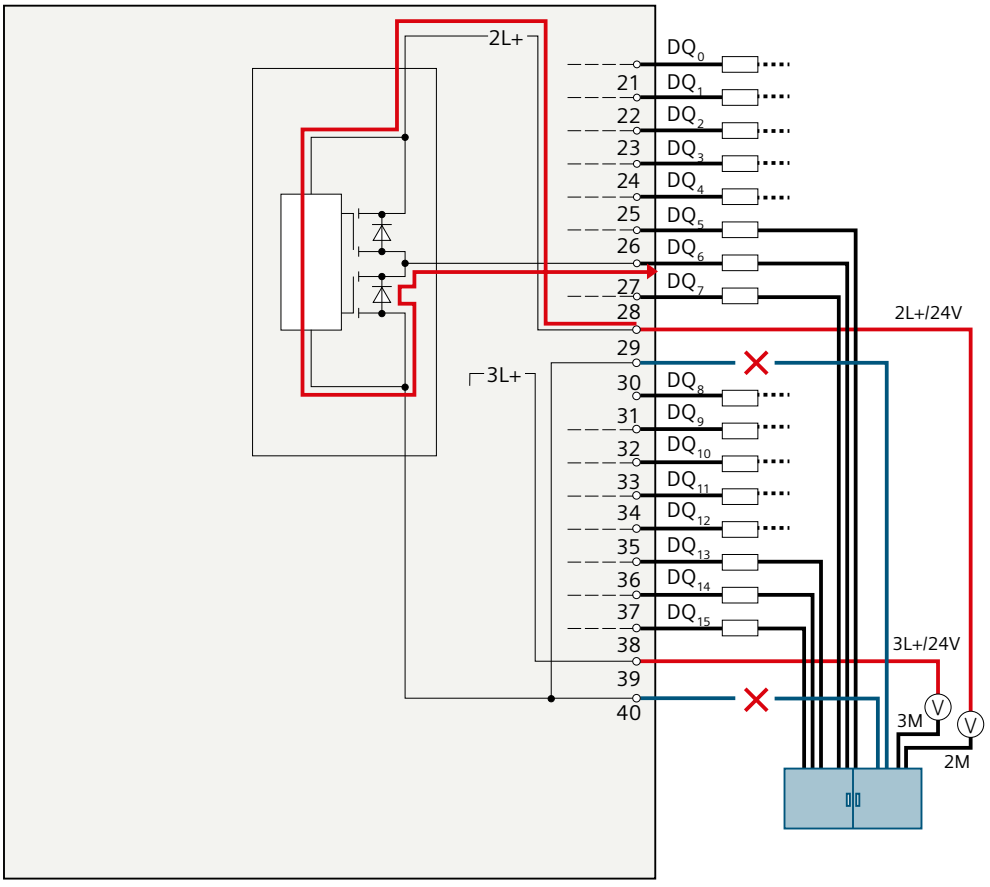

Figure 5-20 Current flow upon interruption of both ground cables using the digital on-board I/O X11 as an example

If a wire break occurs on the first and on the second ground cable from the central terminal block to the terminals 30 and 40 of the module, a malfunction occurs on the module. Both ground connections of the module are interrupted.

The supply current flows from the power supply 2L+ via terminal 29 to the module. In the module, the current flows via the output driver into the parasitic diode and exits the module via the output terminal, e.g. as shown in the figure via terminal 27. The supply current therefore flows via the connected load. The internal supply current is typically 25 mA.

WARNING

Interruption of both ground cables

If the ground terminals 30 and 40 are interrupted, the following incorrect response can occur:

The activated outputs, which are switched to high, start to switch back and forth between high and low. If the load connected at the output is sufficiently small, the output is continuously activated.

Faulty wiring

The following figure shows faulty wiring, which has a bridge on the front connector.

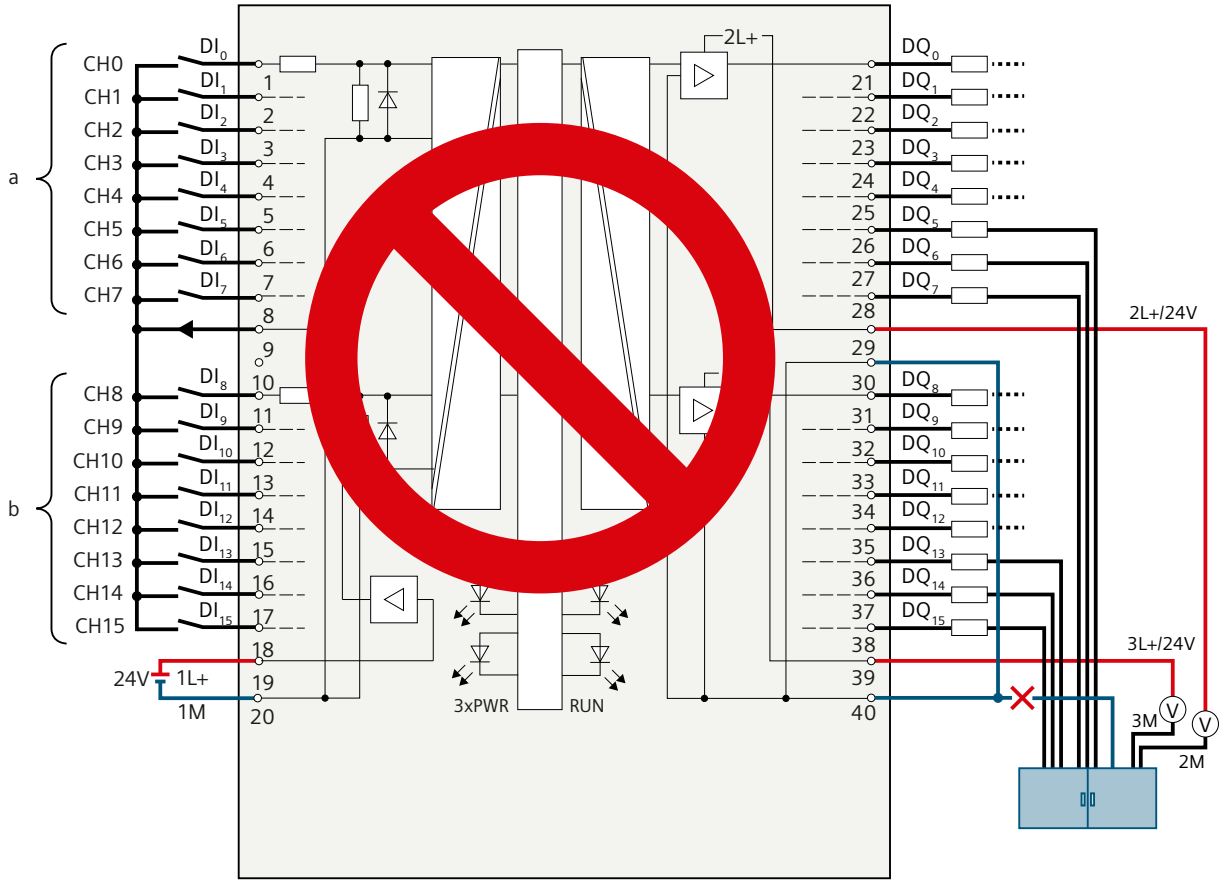

Figure 5-21 Faulty wiring using the digital on-board I/O X11 as an example: Bridge

Terminals 30 and 40 are connected in the front connector and only routed with one cable to the central terminal block. If this cable breaks, terminals 30 and 40 are no longer connected to the ground. The module's supply current flows out via the output terminal.

The figure below shows the current flow when the ground connections of the loads and the ground connection of terminal 30 are routed with a common cable to the central terminal block.

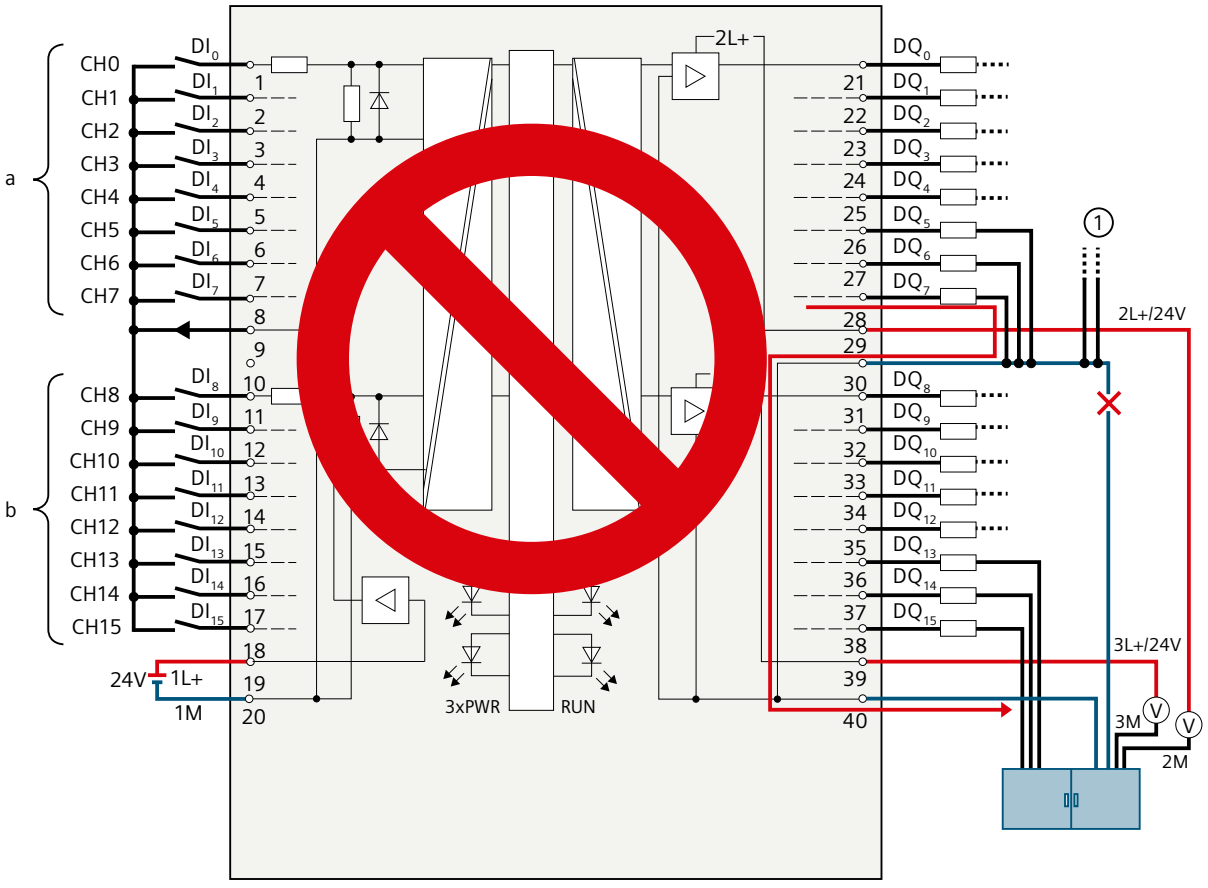

① Ground connections of other plant parts that can also carry large currents.

Figure 5-22 Faulty wiring using the digital on-board I/O X11 as an example: Common cable

If a break occurs in the common cable, the current of the outputs flows via terminal 30 to the module and via terminal 40 to the central terminal block. The current flows via the module.

WARNING

Current flow with faulty wiring

If a break occurs in the common cable, the current can be very high, depending on the plant, and lead to the destruction of the module.

The figure below shows the current flow with correct wiring when a potential difference exits between the grounding points.

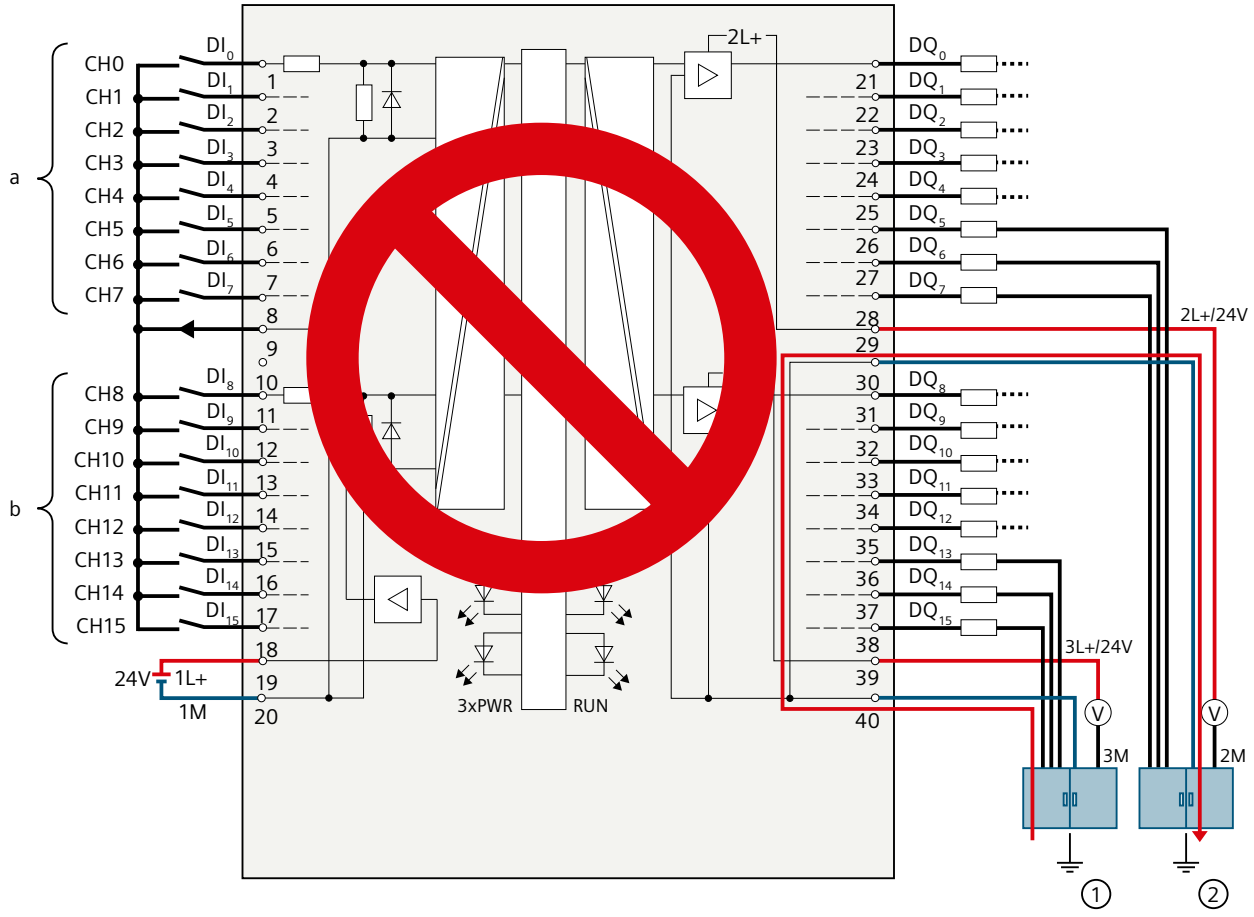

① Grounding point functional earth 1 (FE 1)

② Grounding point functional earth 2 (FE 2)

Figure 5-23 Potential difference using the digital on-board I/O X11 as an example

Equipotential bonding occurs via terminals 30 and 40. When a potential difference exists between the grounding points FE1 and FE2, the compensating current flows via terminals 30 and 40.

⚠ WARNING

Current flow with faulty wiring

In the event of a potential difference, the current can be very high, depending on the potential conditions, and lead to the destruction of the module.

Response of the digital outputs to a wire break at ground connection of the outputs (X12)

Due to the design of the module, in contrast to the digital onboard I/O X12, no supply current is discharged via the outputs if ground is interrupted in the digital onboard I/O X12, in contrast to the digital onboard I/O X11.

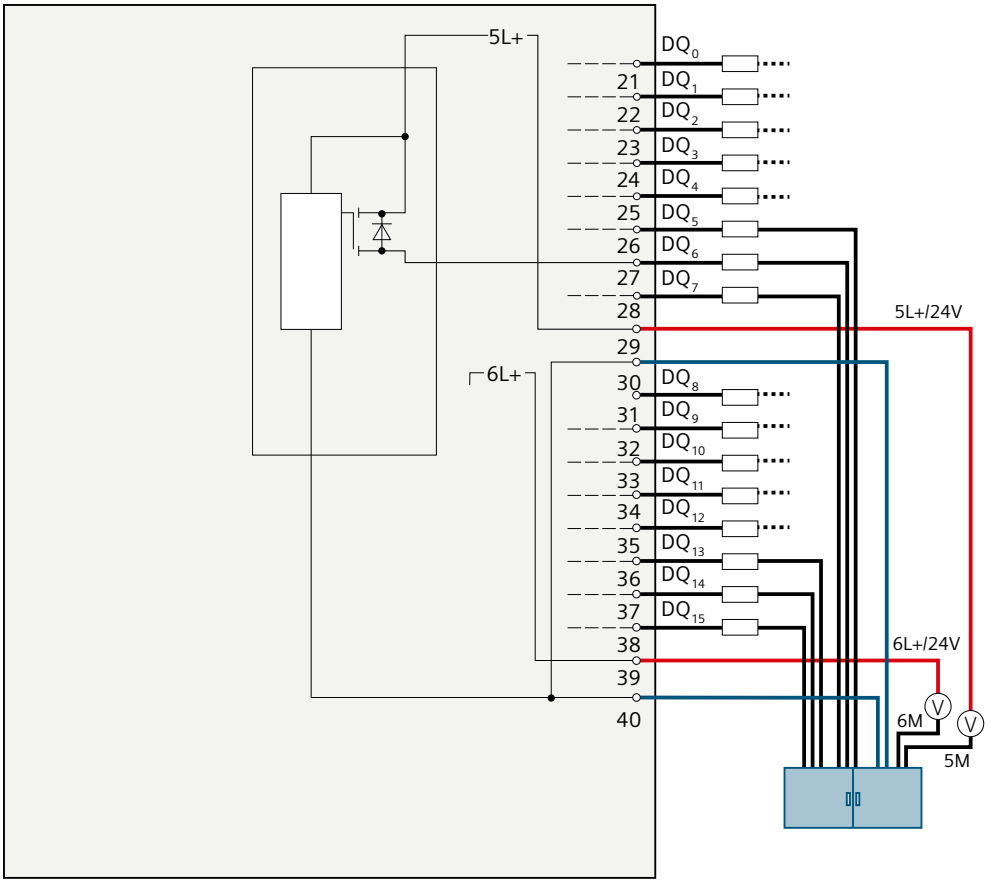

Figure 5-24 Internal circuitry of the digital onboard I/O X12

Input filter for digital inputs

To suppress disruptions, you can configure an input delay for the digital inputs.
You can specify the following values for the input delay:

- None
- 0.05 ms
- 0.1 ms
- 0.4 ms
- 1.6 ms
- 3.2 ms (default setting)
- 12.8 ms
- 20 ms

NOTE

Shielding

If you use standard digital inputs with "None" set as the input delay, you must use shielded cables. Shielding and the infeed element are recommended for use of standard digital inputs starting from an input delay of 0.05 ms but are not absolutely necessary.

⚠ WARNING

Digital input as a measuring input

If you configure a digital input as a measuring input, the value which the digital input returns via the input data of the "DI 16/DQ 16" is not reliable. If you configure a hardware interrupt on this input it can trigger sporadically without a rising or falling edge actually existing.

5.3.4 Addresses of the high-speed counters

You connect the encoder signals, the digital input and output signals and the encoder supplies to the two 40-pin front connectors of the digital on-board I/O. For information on wiring the front connectors, establishing the cable shields, etc., refer to the S7-1500, ET 200MP (http://support.automation.siemens.com/WW/view/en/59191792) system manual.

Encoder signals

The 24 V encoder signals are designated with letters A, B and N. You can connect the following encoder types:

- Incremental encoder with signal N:
  Signals A, B and N are connected using the correspondingly marked connections. Signals A and B are the two incremental signals, phase-shifted by 90°. N is the zero mark signal that supplies a pulse per revolution.
- Incremental encoder without signal N:
  Signals A and B are connected using the correspondingly marked connections. Signals A and B are the two incremental signals, phase-shifted by 90°.
- Pulse encoder without direction signal:
  The count signal is connected to the A connection.

- Pulse encoder with direction signal:
  The count signal is connected to the A connection. The direction signal is connected to the B connection.
- Pulse encoder with up/down count signal:
  The up count signal is connected to the A connection. The down count signal is connected to the B connection.

You can connect the following encoders or sensors to the A, B and N inputs:

- Switching to P potential:
  The encoder or sensor switches the A, B and N inputs to 24 V DC.

  NOTE

  External load resistance

  Note that, depending on the characteristics of the signal source, effective load and height of the signal frequency, you may possibly require an external load resistance to limit the fall time of the signal from high level to low level.

  The specifications/technical data of the signal source (e.g. sensor) are decisive for the configuration of such a load resistance.

- Push-pull:
  The encoder or sensor switches the A, B and N inputs alternately to 24 V DC and to ground M.

Digital inputs HSC DI0 and HSC DI1

The digital inputs are logically assigned to the high-speed counters (HSC). For information on the possible assignment of the on-board I/O inputs to the high-speed counters, refer to table Interconnection overview of the inputs (Page 106). Up to two digital inputs are available for each high-speed counter (HSC DI0 and HSC DI1). You can use the digital inputs for the gate control (Gate), synchronization (Sync) and Capture functions. Alternatively, you can use one or more digital inputs as standard digital inputs without the functions mentioned and read the signal state of the respective digital input using the feedback interface.

Digital inputs that you do not use for high-speed counting are available for use as standard DIs.

Input addresses of the high-speed counters

You set the digital input addresses used by the high-speed counters (HSC) and the assignment of A/B/N, DI0, DI1 and DQ1 signals in STEP 7 (TIA Portal). You can enable and configure each HSC when you configure the compact CPU.

The compact CPU assigns the input addresses for the A/B/N signals automatically according to the configuration.

You specify the input addresses for DI0 and DI1 according to the table Interconnection overview of the inputs (Page 106). The interconnection produces a direct connection of the HSC to an input of the on-board I/O. The high-speed counter then uses this input as HSC DI0 or HSC DI1 ([DI] symbol). The [DI] symbols in the table identify the input addresses for HSC DI0 and HSC DI1 that are offered for selection in the hardware configuration.

Assignment of HSC addresses of inputs

You can find an overview of the options for interconnecting the inputs of the front connectors X11 and X12 in the section Interconnection overview of the inputs (Page 106).

NOTE

HSC compatibility mode

The displayed interconnection options in the section Interconnection overview of the inputs (Page 106) assume that the "Front connector assignment like CPU 1511C" option is disabled. If the option is enabled, the input signals are interconnected the same way as for the CPU 1511C-1 PN. In this case, the interconnection options of the CPU 1511C-1 PN manual apply.

Digital outputs HSC-DQ0 and HSC-DQ1

Two digital outputs are available for each high-speed counter. Digital output HSC-DQ0 is a logical output that cannot be interconnected with a digital output of the on-board I/O. Digital output HSC-DQ0 can only be used via the user program. HSC-DQ1 is a physical output that can be interconnected with a digital output of the on-board I/O.

The digital outputs are 24 V sourcing output switches relative to M and can be loaded with a rated load current of 0.1 A. The outputs used as standard outputs have a rated load current of 0.5 A. The digital outputs are protected against overload and short-circuit.

NOTE

It is possible to directly connect relays and contactors without external wiring. For information on the maximum possible operating frequencies and the inductance values of the inductive loads at the digital outputs, refer to the Technical specifications section.

The section Interconnection overview of outputs (Page 108) provides an overview of which digital outputs you can interconnect to which high-speed counters. Digital outputs to which no high-speed counter is interconnected can be used as standard outputs. The maximum output delay of each digital output used as standard output is 500 µs.

Shielding

NOTE

When you use digital inputs/outputs with technology functions, i.e. interconnect high-speed counters with the inputs/outputs, you must use shielded cables and the infeed element for shielding.

Reference

For more information on configuring the inputs of the high-speed counters, refer to the S7-1500, ET 200MP, ET 200SP Counting, measurement and position detection (http://support.automation.siemens.com/WW/view/en/59709820) function manual and the STEP 7 online help.

5.3.5 Addresses of the pulse generators in the Pulse Width Modulation (PWM) and Frequency Output modes

Configuring the outputs as pulse generators

If you configure the memory of the outputs of the CPU as pulse generators (for PWM or PTO), the corresponding addresses of the outputs are removed from the memory. You cannot use the addresses of the outputs for other purposes in your user program. When your user program writes a value to an output that you are using as a pulse generator, the CPU does not write this value to the physical output.

Assignment of the PWM addresses of the outputs

The section Interconnection overview of outputs (Page 108) provides an overview of which digital outputs you can interconnect to which PWM channels.

NOTE

The digital inputs and outputs assigned to PWM and PTO cannot be forced.

You assign the digital inputs and outputs to the pulse duration modulation (PWM) and the pulse train output (PTO) during the device configuration. If you assign digital inputs and outputs to these functions, the values of the addresses of the assigned digital inputs and outputs cannot be changed by the function for forcing in the watch table. Instead, you can force the output bit TM_CTRL_DQ to 0 and switch the output on or off with the bit SET_DQA (relevant for the PWM and Frequency Output modes).

For more information on forcing inputs and outputs, refer to the S7-1500, ET 200MP system manual (http://support.automation.siemens.com/WW/view/en/59191792).

5.3.6 Addresses of pulse generators in the PTO mode

You connect the encoder signals, the digital input and output signals and the encoder supplies to the two 40-pin front connectors of the digital on-board I/O. For information on wiring the front connectors and establishing the cable shield, refer to the S7-1500, ET 200MP system manual (http://support.automation.siemens.com/WW/view/en/59191792).

Encoder signals

In addition to supporting its outputs, each PTO channel also supports the three following optional inputs:

- Reference Switch (RS)
- Measuring Input (MI)
- Drive Ready (DR)

Input addresses of the pulse generators (PTO)

You make the settings of the digital input addresses used by the pulse generators (PTO) in the hardware configuration of STEP 7 (TIA Portal). When you configure the compact CPU you can individually activate and configure the four PTO channels.

Assignment of PTO addresses of inputs

A direct connection from the PTO to an input of the on-board I/O is established through the interconnection. You can find an overview of the options for interconnecting the inputs (DI0 to DI15) to the available PTO channels (PTO1 to PTO4) in the section Interconnection overview of the inputs (Page 106).

Assignment of the PTO addresses of the outputs

The section Interconnection overview of outputs (Page 108) provides an overview of which digital outputs you can interconnect to which PTO channels.

5.3.7 Interconnection overview of the inputs

Combined interconnection of the technology channels

In order that you can correctly divide the available inputs between the possible technology channels HSC and PTO, the following table provides you with an overview of the possible interconnections of the front connectors X11 and X12. This overview is a combination of interconnection options of technology channels for HSC and PTO.

Front connector	Terminal	Channel	PTO								High-speed counter (HSC)					
			PTO1		PTO2		PTO3		PTO4		HSC1		HSC2		HSC3	
X11	1	DI0	[DR]		[DR]		[DR]		[DR]		A					
	2	DI1	[DR]		[DR]		[DR]		[DR]		[B]					
	3	DI2	[DR]		[DR]		[DR]		[DR]		[N]					
	4	DI3	[DR]		[DR]		[DR]		[DR]				A			
	5	DI4	[DR]		[DR]		[DR]		[DR]				[B]			
	6	DI5	[DR]		[DR]		[DR]		[DR]				[N]			
	7	DI6	[DR]		[DR]		[DR]		[DR]						A	
	8	DI7	[DR]		[DR]		[DR]		[DR]						[B]	
	11	DI8	[DR]		[DR]		[DR]		[DR]			[DI]		[DI]	[N]	[DI]
	12	DI9	[DR]		[DR]		[DR]		[DR]			[DI]		[DI]		[DI]
	13	DI10	[DR]		[DR]		[DR]		[DR]			[DI]		[DI]		[DI]
	14	DI11	[DR]		[DR]		[DR]		[DR]			[DI]		[DI]		[DI]
	15	DI12	[DR]	[MI]	[DR]		[DR]		[DR]			[DI]		[DI]		[DI]

[...] = Use is optional

[DR] = Drive Ready; [MI] = Measuring Input; [RS] = Reference Switch

[DI] stands for [HSC DI0/HSC DI1] = DI: Is used for the HSC functions: Gate, Sync and Capture

The assignment to [B] or [N] takes precedence over the assignment to HSC DI0 or HSC DI1. This means that input addresses that are assigned to count signal [B] or [N] based on the selected signal type cannot be used for other signals such as HSC DI0 or HSC DI1.

X11	16	DI13	[DR]	[RS]	[DR]	[MI]	[DR]		[DR]			[DI]		[DI]		[DI]
	17	DI14	[DR]		[DR]	[RS]	[DR]		[DR]			[DI]		[DI]		[DI]
	18	DI15	[DR]		[DR]		[DR]		[DR]			[DI]		[DI]		[DI]

[...] = Use is optional

[DR] = Drive Ready; [MI] = Measuring Input; [RS] = Reference Switch

[DI] stands for [HSC DI0/HSC DI1] = DI: Is used for the HSC functions: Gate, Sync and Capture

The assignment to [B] or [N] takes precedence over the assignment to HSC DI0 or HSC DI1. This means that input addresses that are assigned to count signal [B] or [N] based on the selected signal type cannot be used for other signals such as HSC DI0 or HSC DI1.

Front connector	**Terminal**	**Channel**	**PTO**								**High-speed counter (HSC)**					
			PTO1		**PTO2**		**PTO3**		**PTO4**		**HSC4**		**HSC5**		**HSC6**	
X12	1	DI0	[DR]		[DR]		[DR]		[DR]		A					
	2	DI1	[DR]		[DR]		[DR]		[DR]		[B]					
	3	DI2	[DR]		[DR]		[DR]		[DR]		[N]					
	4	DI3	[DR]		[DR]		[DR]		[DR]				A			
	5	DI4	[DR]		[DR]		[DR]		[DR]				[B]			
	6	DI5	[DR]		[DR]		[DR]		[DR]				[N]			
	7	DI6	[DR]		[DR]		[DR]		[DR]						A	
	8	DI7	[DR]		[DR]		[DR]		[DR]						[B]	
	11	DI8	[DR]		[DR]		[DR]		[DR]			[DI]		[DI]	[N]	[DI]
	12	DI9	[DR]		[DR]		[DR]		[DR]			[DI]		[DI]		[DI]
	13	DI10	[DR]		[DR]		[DR]		[DR]			[DI]		[DI]		[DI]
	14	DI11	[DR]		[DR]		[DR]		[DR]			[DI]		[DI]		[DI]
	15	DI12	[DR]		[DR]		[DR]	[MI]	[DR]			[DI]		[DI]		[DI]
	16	DI13	[DR]		[DR]		[DR]	[RS]	[DR]			[DI]		[DI]		[DI]
	17	DI14	[DR]		[DR]		[DR]		[DR]	[MI]		[DI]		[DI]		[DI]
	18	DI15	[DR]		[DR]		[DR]		[DR]	[RS]		[DI]		[DI]		[DI]

[...] = Use is optional

[DR] = Drive Ready; [MI] = Measuring Input; [RS] = Reference Switch

[DI] stands for [HSC DI0/HSC DI1] = DI: Is used for the HSC functions: Gate, Sync and Capture

The assignment to [B] or [N] takes precedence over the assignment to HSC DI0 or HSC DI1. This means that input addresses that are assigned to count signal [B] or [N] based on the selected signal type cannot be used for other signals such as HSC DI0 or HSC DI1.

5.3.8 Interconnection overview of outputs

Combined interconnection of the technology channels

The following table provides you with an overview of the possible interconnections of the front connectors X11 and X12 to allow you to correctly divide the available inputs between the possible technology channels HSC, PWM and PTO. This overview is a combination of interconnection options of technology channels for HSC, PWM and PTO.

	Hardware output			Standard DQ	PWM	PTO			HSC
Front connector	**Terminal**	**Channel**	**Output module**	**Configurable as standard DQ for channel**	**Configurable as PWM output for channel**	**Configurable as PTO output A for channel** 1)	**Configurable as PTO output B for channel** 2)	**Configurable as "Drive enable output" for channel**	**Can be used as HSC-DQ1 for channel**
X11	1	DQ0	High-speed		PWM1	PTO1			
			Standard	DQ0	PWM1			[PTO 2/3/4]	
	2	DQ1	High-speed				PTO1		[HSC1]
			Standard	DQ1				[PTO 1/2/3/4]	
	3	DQ2	High-speed		PWM2	PTO2			
			Standard	DQ2	PWM2			[PTO 1/3/4]	
	4	DQ3	High-speed				PTO2		HSC2
			Standard	DQ3				[PTO 1/2/3/4]	
	5	DQ4	High-speed		PWM3	PTO3			[HSC3]
			Standard	DQ4	PWM3			[PTO 1/2/4]	
	6	DQ5	High-speed				PTO3		[HSC4]
			Standard	DQ5				[PTO 1/2/3/4]	
	7	DQ6	High-speed		PWM4	PTO4			HSC6
			Standard	DQ6	PWM4			[PTO 1/2/3]	
	8	DQ7	High-speed				PTO4		[HSC5]
			Standard	DQ7				[PTO 1/2/3/4]	
	11	DQ8	Standard	DQ8	PWM1			[PTO 1/2/3/4]	
	12	DQ9		DQ9			PTO1*	[PTO 1/2/3/4]	[HSC1]
	13	DQ1-0		DQ10	PWM2			[PTO 1/2/3/4]	
	14	DQ1-1		DQ11			PTO2*	[PTO 1/2/3/4]	HSC2

* Only supports for PTO direction signal (signal type "pulse A and direction B")

1) "PTOx - Output A" stands for the signal types Pulse Output A or Pulse

2) "PTOx - Output B" stands for the Pulse output B or Direction signal types

X11	15	DQ1-2	Standard	DQ12	PWM3			[PTO 1/2/3/4]	[HSC3]
	16	DQ1-3		DQ13			PTO3*	[PTO 1/2/3/4]	[HSC4]
	17	DQ1-4		DQ14	PWM4			[PTO 1/2/3/4]	HSC6
	18	DQ1-5		DQ15			PTO4*	[PTO 1/2/3/4]	[HSC5]
X12	1	DQ0	Standard	DQ0				[PTO 1/2/3/4]	
	2	DQ1		DQ1				[PTO 1/2/3/4]	
	3	DQ2		DQ2				[PTO 1/2/3/4]	
	4	DQ3		DQ3				[PTO 1/2/3/4]	
	5	DQ4		DQ4				[PTO 1/2/3/4]	
	6	DQ5		DQ5				[PTO 1/2/3/4]	
	7	DQ6		DQ6				[PTO 1/2/3/4]	
	8	DQ7		DQ7				[PTO 1/2/3/4]	
	11	DQ8		DQ8				[PTO 1/2/3/4]	
	12	DQ9		DQ9				[PTO 1/2/3/4]	
	13	DQ1-0		DQ10				[PTO 1/2/3/4]	
	14	DQ1-1		DQ11				[PTO 1/2/3/4]	
	15	DQ1-2		DQ12				[PTO 1/2/3/4]	
	16	DQ1-3		DQ13				[PTO 1/2/3/4]	
	17	DQ1-4		DQ14				[PTO 1/2/3/4]	
	18	DQ1-5		DQ15				[PTO 1/2/3/4]	

* Only supports for PTO direction signal (signal type "pulse A and direction B")

1) "PTOx - Output A" stands for the signal types Pulse Output A or Pulse

2) "PTOx - Output B" stands for the Pulse output B or Direction signal types

Technical characteristics of the outputs

The following table shows an overview of the technical characteristics of the individual outputs.

	(period duration)Frequency range	DQ0 to DQ7		DQ8 to DQ15
		(0.1 A) activatedHigh-speed output	(0.1 A) deactivatedHigh-Speed output	Standard output
		max. 100 kHz	max. 10 kHz	max. 100 Hz
		max. 0.1 A	max. 0.5 A	max. 0.5 A
		Switching to P potential / sink output	Switching to P potential[1]	Switching to P potential[1]
Accuracy of the pulse duration	10 to <= 100 kHz (100 to > = 10 µs)	±100 ppm ±2 µs	---	---
	100 Hz to <10 kHz (10 ms to > 100 µs)		±100 ppm ±10 µs with load > 0.1 A ±100 ppm ±20 µs with load ≥ 2mA	
	10 to < 100 Hz (0.1 s to > 10 ms)			±100 ppm ±100 µs with load > 0.1 A ±100 ppm ±200 µs with load ≥ 2mA
	1 to <10 Hz (1 to > 0.1 s)	±150 ppm ±2 µs	±150 ppm ±10 µs with load > 0.1 A ±150 ppm ±20 µs with load ≥ 2mA	±150 ppm ±100 µs with load > 0.1 A ±150 ppm ±200 µs with load ≥ 2mA
	0.1 to < 1 Hz (10 to >1 s)	±600 ppm ±2 µs	±600 ppm ±10 µs with load > 0.1 A ±600 ppm ± 20 µs with load ≥ 2mA	±600 ppm ±100 µs with load > 0.1 A ±600 ppm ±200 µs with load ≥ 2mA
Accuracy of the frequency	---	± 100 ppm[2]	± 100 ppm[2]	± 100 ppm[2][3]
Minimum pulse duration		2 µs	20 µs with load > 0.1 A 40 µs with load ≥ 2 mA 20 µs with load < 240 Ω[1]	400 µs with load > 0.1 A 500 µs with load ≥ 2 mA 400 µs with load < 240 Ω[1]

1) With sourcing outputs, it must be taken into consideration that falling edges can be delayed as compared to rising edges depending on the load. The on-load factor can therefore be falsified. Consider using a high-speed output if the load at the output is greater than 240 Ω.

2) The frequency has a basic accuracy of ±100 ppm with a resolution of 0.3638 mHz.

3) Standard outputs are affected by jitter during generation of frequencies. The set period duration is not adhered to in every period, but it is adhered to on average over several periods.

Parameters/address space

6

6.1 Address space of the analog on-board I/O

Address space of the analog input and output channels

The addresses are divided into five analog input channels and two analog output channels. STEP 7 (TIA Portal) assigns the addresses automatically. You can change the addresses in the hardware configuration of STEP 7 (TIA Portal), i.e. freely assign the start address. The addresses of the channels are based on the start address.

"IB x" stands, for example, for the start address input byte x. "QB x" stands, for example, for the start address output byte x.

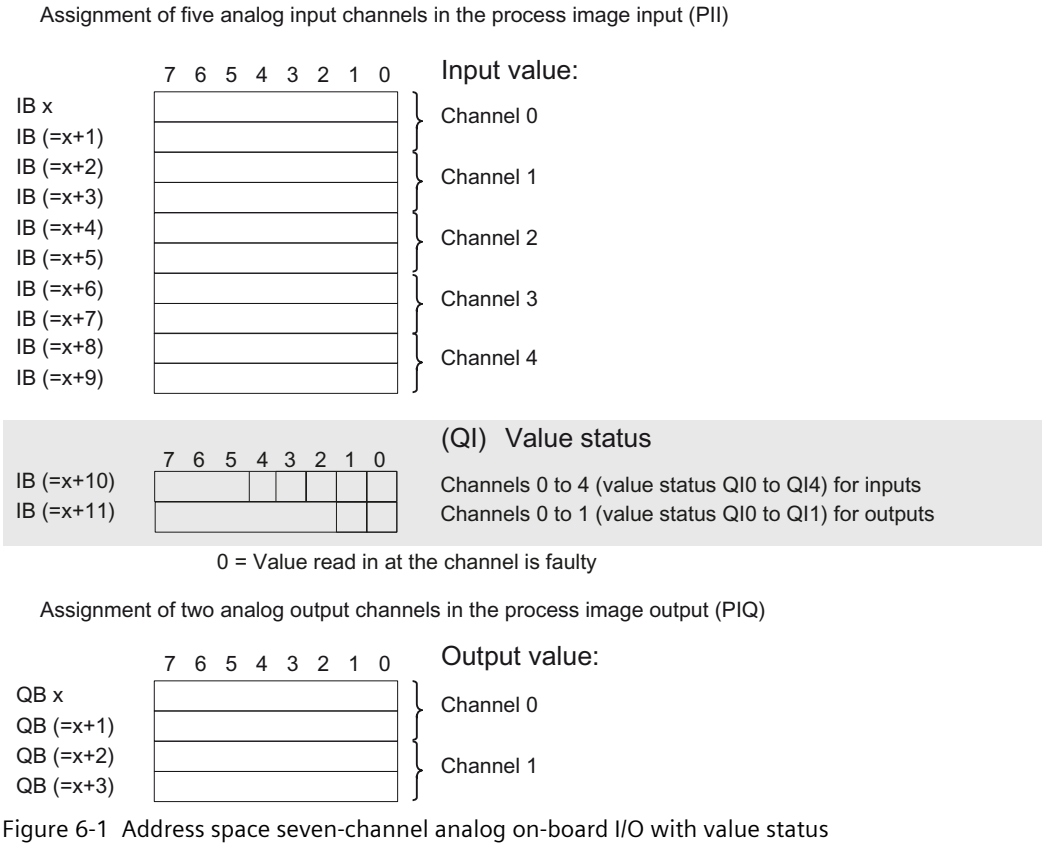

Figure 6-1 Address space seven-channel analog on-board I/O with value status

Value status (quality information, QI)

As of firmware version 2.0, the analog and digital on-board I/O support the value status as diagnostics option. You activate the use of the value status in the hardware configuration of STEP 7 (TIA Portal). Value status is deactivated by default.

When you activate the value status, the input area of the analog on-board I/O contains two additional bytes, which provide the QI bits to the five analog input channels and two analog output channels. You access the QI bits through the user program.

Value status of input channels

Value status = 1 ("Good") indicates that the value of the assigned input at the terminal is valid.

Value status = 0 ("Bad") indicates that the read value is not valid.

Possible cause for value status = 0:

- a channel has been deactivated
- a measured value was not updated after a parameter change
- a measured value is outside the low/high measuring range (overflow/underflow)
- Wire break has occurred (only for the "Voltage" measurement type in the measuring range "1 to 5 V" and for the "Current" measurement type in the measuring range "4 to 20 mA")

Value status of output channels

The value status = 1 ("Good") indicates that the process value specified by the user program is correctly output at the terminal.

The value status = 0 ("Bad") indicates that the process value output at the hardware output is incorrect.

Possible cause for value status = 0:

- a channel has been deactivated
- Outputs are inactive (for example, CPU in STOP)
- An output value is outside the lower/upper measuring range (overflow/underflow)
- Wire break has occurred (only for the "Current" output type)
- Short-circuit has occurred (only for the "Voltage" output type)

6.2 Address space of the digital on-board I/O

Address space of digital input and digital output channels

The addresses are divided into 2 x 16 digital input channels and 2 x 16 digital output channels. STEP 7 (TIA Portal) assigns the addresses automatically. You can change the addresses in the hardware configuration of STEP 7 (TIA Portal), i.e. freely assign the start address. The addresses of the channels are based on the start address.

The letters "a" to "d" are lasered on the on-board I/O. "IB a", for example, stands for start address input byte a. "QB x", for example, stands for start address output byte x.

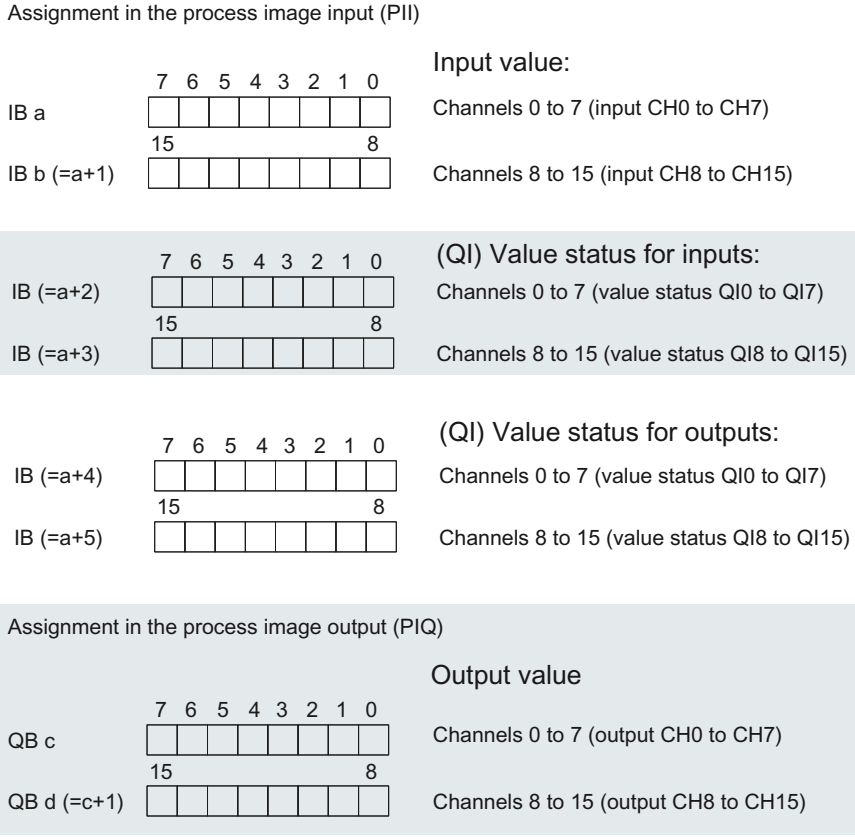

Figure 6-2 Address space of the submodule X11 of the 2 x 32-channel digital on-board I/O (16 digital inputs/16 digital outputs) with value status

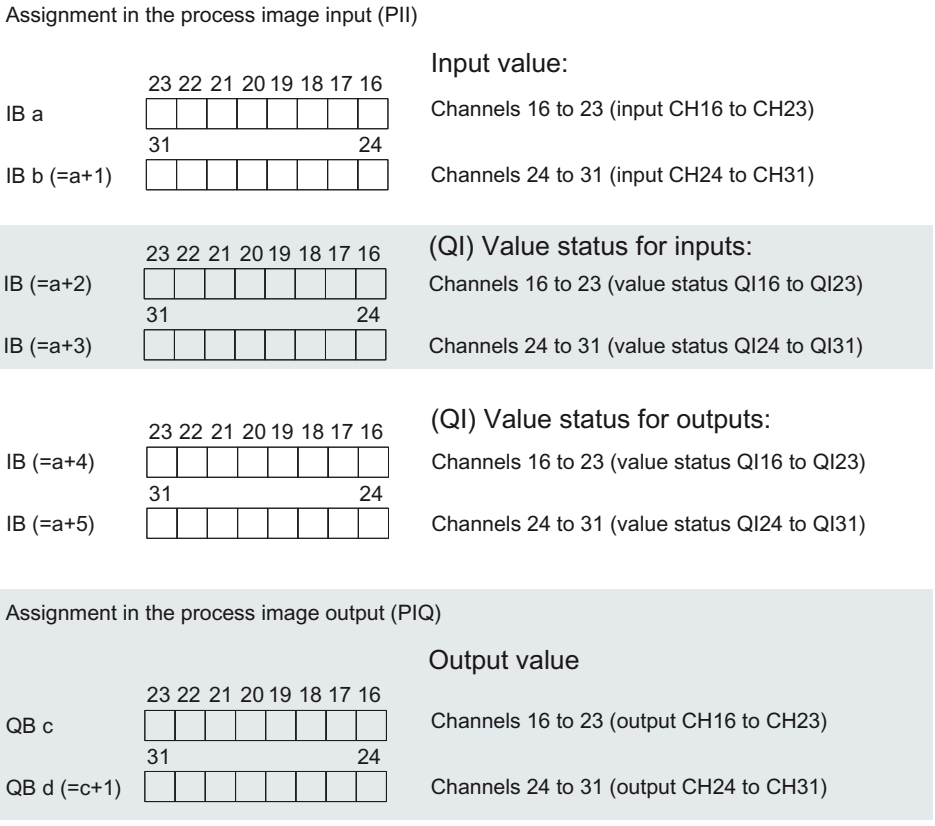

Figure 6-3 Address space of the submodule X12 of the 2 x 32-channel digital on-board I/O (16 digital inputs/16 digital outputs) with value status

Value status (quality information, QI)

As of firmware version 2.0, the analog and digital on-board I/O support the value status as diagnostics option. You activate the use of the value status in the hardware configuration of STEP 7 (TIA Portal). Value status is deactivated by default. You can activate/deactivate the value status of the digital on-board I/O for X11 and X12 independently of each other.

When you activate the value status, the input area of the digital on-board I/O (X11/X12) contains four additional bytes, which provide the QI bits to the 16 digital input channels and 16 digital output channels. You access the QI bits through the user program.

Value status of input channels

Value status = 1 ("Good") indicates that the value of the assigned input at the terminal is valid.

Value status = 0 ("Bad") indicates that no/or too little supply voltage L+ is applied at the terminal and that the read value is therefore not valid.

Value status of output channels

The value status = 1 ("Good") indicates that the process value specified by the user program is correctly output at the terminal.

The value status = 0 ("Bad") indicates that the process value output at the hardware output is incorrect or the channel is used for technology functions.

Possible cause for value status = 0:

- The supply voltage L+ is missing at the terminals or is not sufficient
- Outputs are inactive (for example, CPU in STOP)
- Technology functions (HSC, PWM or PTO) use the channel

NOTE

Behavior of the value status at the output channels for technology functions

The output channels return the value status 0 ("Bad") when a technology channel (HSC, PWM or PTO) is used. It does not matter in this context whether the output value is incorrect or not.

Address space of the high-speed counters

Table 6-1 Size of the input and output addresses of the high-speed counters

	Inputs	Outputs
Size per high-speed counter (6x)	16 bytes	12 bytes

You can find a description of the control interface in the section Assignment of the control interface of the high-speed counters (Page 47). You can find a description of the feedback interface in the section Assignment of the feedback interface of the high-speed counters (Page 49).

Table 6-2 Size of the input and output addresses in operating mode "Position input for Motion Control"

	Inputs	Outputs
Size per high-speed counter (6x)	16 bytes	4 bytes

6.3 Address space of the pulse generators

Address space of the pulse generators in the PWM, frequency output and PTO modes

Operating mode	Feedback interface (inputs)	Control interface (outputs)
PWM (4x)	4 bytes	12 bytes
Frequency output	4 bytes	12 bytes
PTO	18 bytes	10 bytes
Deactivated	4 bytes *	12 bytes *

* In "Deactivated" mode, the control interface is not evaluated and the feedback interface is set to 0 value

6.4 Measurement types and measuring ranges of the analog on-board I/O

Introduction

The analog on-board I/O is set to voltage measurement type and measuring range ±10 V by default for the inputs on channels 0 to 3. By default, channel 4 is set to resistance measuring type and measuring range 600 Ω. If you want to use another measurement type or measuring range, change the parameter settings of the analog on-board I/O with STEP 7 (TIA Portal).

Disable unused inputs to prevent disturbances that cause incorrect behavior (e.g. triggering of a hardware interrupt).

Measurement types and measuring ranges

The following table shows the measurement types, the measuring range and the possible channels.

Table 6-3 Measurement types and measuring range

Measurement type	Measuring range	Channel
Voltage	0 to 10 V 1 to 5 V ±5 V ±10 V	0 to 3
Current 4WMT (4-wire measuring transducer)	0 to 20 mA 4 to 20 mA ±20 mA	0 to 3
Resistance	150 Ω 300 Ω 600 Ω	4
Thermal resistor RTD	Pt 100 Standard/Climate Ni 100 Standard/Climate	4
Deactivated	-	-

The tables of the input ranges, overflow, underrange, etc. can be found in the appendix .

6.5 Output type and output ranges of the analog on-board I/O

Introduction

The analog on-board I/O is set to voltage output type and output range ±10 V as default for the outputs. If you want to use another output range or output type, you need to change the parameter settings of the analog on-board I/O in STEP 7 (TIA Portal).

Output types and output ranges

The following table shows the output type and the corresponding output ranges.

Table 6-4 Output type and output ranges

Output type	Output range
Voltage	1 to 5 V 0 to 10 V ±10 V
Current	0 to 20 mA 4 to 20 mA ±20 mA
Deactivated	-

6.6 Parameters of the analog on-board I/O

Parameters of the analog on-board I/O

You specify the properties of the analog on-board I/O during parameter assignment with STEP 7 (TIA Portal). The tables below list the parameters that can be set for inputs and outputs, respectively.

When parameters are assigned in the user program, they are transferred to the analog on-board I/O via data records with the WRREC instruction, see section Parameter assignment and structure of the parameter data records of the analog on-board I/O (Page 160).

Configurable parameters and default settings for inputs

Table 6-5 Configurable "Diagnostics" parameters

Parameters [1]	Value range	Default	Reconfiguration in RUN
Diagnostics			
• Overflow	Yes/No	No	Yes
• Underflow	Yes/No	No	Yes
• Wire break [2]	Yes/No	No	Yes
• Current limit for wire break diagnostics	1.185 mA or 3.6 mA	1.185 mA	Yes

1) All parameters can be set channel-selective

2) Only for the "Voltage" measurement type in the measuring range 1 to 5 V and for the "Current" measurement type in the measuring range 4 to 20 mA

Table 6-6 Configurable "Measuring" parameters

Parameters [1]	Value range	Default	Reconfiguration in RUN
Measuring			
• Measurement type	See section Measurement types and measuring ranges of the analog on-board I/O (Page 116)	Voltage (channels 0 to 3) Resistance (channel 4)	Yes
• Measuring range		±10 V (channels 0 to 3) 600 Ω (channel 4)	Yes
• Temperature coefficient	Pt: 0.003851 Pt: 0.003916 Pt: 0.003902 Pt: 0.003920 Ni: 0.006180 Ni: 0.006720	0.003851	Yes

1) All parameters can be set channel-selective

2) Kelvin (K) is only possible for the "Standard range" measuring range and not for the "Climatic range" measuring range

3) The interference frequency suppression must have the same value for all active input channels. This value can only be changed through reconfiguration in RUN with single channel parameter assignment (data records 0 to 4) if all other input channels are disabled.

Parameters [1]	Value range	Default	Reconfiguration in RUN
• Temperature unit	• Kelvin (K) [2] • Fahrenheit (°F) • Celsius (°C)	°C	Yes
• Interference frequency suppression	400 Hz 60 Hz 50 Hz 10 Hz	50 Hz	Yes [3]
• Smoothing	None/weak/medium/strong	None	Yes

1) All parameters can be set channel-selective

2) Kelvin (K) is only possible for the "Standard range" measuring range and not for the "Climatic range" measuring range

3) The interference frequency suppression must have the same value for all active input channels. This value can only be changed through reconfiguration in RUN with single channel parameter assignment (data records 0 to 4) if all other input channels are disabled.

Table 6-7 Configurable "Hardware interrupt" parameters

Parameters [1]	Value range	Default	Reconfiguration in RUN
Hardware interrupts			
• Hardware interrupt low limit 1	Yes/No	No	Yes
• Hardware interrupt high limit 1	Yes/No	No	Yes
• Hardware interrupt low limit 2	Yes/No	No	Yes
• Hardware interrupt high limit 2	Yes/No	No	Yes

1) All parameters can be set channel-selective

You can find an overview of the limits for the hardware interrupts in the section Structure of a data record for input channels of the analog on-board I/O (Page 161).

Configurable parameters and default settings for outputs

Table 6-8 Configurable "Diagnostics" parameters

Parameters [1]	Value range	Default	Reconfiguration in RUN
Diagnostics			
• Wire break [2]	Yes/No	No	Yes
• Short-circuit to ground [3]	Yes/No	No	Yes
• Overflow	Yes/No	No	Yes
• Underflow	Yes/No	No	Yes

1) All parameters can be set channel-selective

2) Only for the "Current" output type

3) Only for the "Voltage" output type

Table 6-9 Configurable output parameters

Parameters [1]	Value range	Default	Reconfiguration in RUN
Output parameters			
• Output type	See section Output type and output ranges of the analog on-board I/O (Page 117)	Voltage	Yes
• Output range		±10 V	Yes
• Reaction to CPU STOP	• Turn off • Keep last value • Output substitute value	Turn off	Yes
• Substitute value	Must be within the permitted voltage/current output range. See "Valid substitute value for the output range" table in the section Structure of a data record for output channels of the analog on-board I/O (Page 167)	0	Yes

[1] All parameters can be set channel-selective

Short-circuit detection

The diagnostics for short circuit to ground can be configured for the voltage output type. Short-circuit detection is not possible for low output values. The output voltages must therefore be under -0.1 V or over +0.1 V.

Wire break detection

The diagnostics for wire break can be configured for the current output type. Wire break detection is not possible for low output values; the output currents must therefore be below -0.2 mA or above +0.2 mA.

6.7 Parameters of the digital on-board I/O

Parameters of the digital on-board I/O in standard mode

You specify the properties of the digital on-board I/O during the parameter assignment with STEP 7 (TIA Portal). The tables below list the parameters that can be set for inputs and outputs, respectively.

When parameters are assigned in the user program, they are transferred to the digital on-board I/O via data records with the WRREC instruction, see section Parameter assignment and structure of the parameter data records of the digital on-board I/O (Page 170).

The use of a digital input by a technology channel

When a digital input is in use by a technology channel (HSC, PTO or PWM) the corresponding digital input channel remains fully usable without any restriction.

Use of a digital output by a technology channel

When a digital output is in use by a technology channel (HSC, PTO or PWM) the following restrictions apply to the use of the corresponding digital output channel:

- Output values for the digital output channel are not effective. The output values are specified by the technology channel.
- The CPU STOP behavior configured for the digital output channel is not effective. The reaction of the output to CPU Stop is specified by the technology channel.
- With activated value status (Quality Information) for the DI16/DQ16 submodule, the QI-bit for the digital output channel shows the value 0 (= Status "Bad").
- The current state of the digital output is not returned to the process image output. In the PTO operating mode, you can only observe the switching operations of the assigned digital outputs directly at the output. In the PWM operating mode and with high-speed counters (HSC), you can observe the current state additionally via the feedback interface. Note, however, that high frequencies may no longer be observed under certain circumstances due to an excessively low sampling rate.

Configurable parameters and default settings for inputs

Table 6-10 Configurable parameters for inputs

Parameters [1]	Value range	Default	Reconfiguration in RUN
Diagnostics			
• No supply voltage L+	Yes/No	No	Yes
Input delay	None, 0.05 ms, 0.1 ms, 0.4 ms, 1.6 ms, 3.2 ms, 12.8 ms, 20 ms	3.2 ms	Yes
Hardware interrupt			
• Rising edge	Yes/No	No	Yes
• Falling edge	Yes/No	No	Yes

[1] All parameters can be set channel-selective

Configurable parameters and default settings for outputs

Table 6-11 Configurable parameters for outputs

Parameters [1]	Value range	Default	Reconfiguration in RUN
Diagnostics			
• Missing supply voltage L+	Yes/No	No	Yes
Reaction to CPU STOP When the digital output is controlled by a technology channel (HSC, PTO or PWM), this parameter is not effective. In this case the technology channel specifies the reaction of the digital output to CPU STOP.	• Turn off • Keep last value • Output substitute value 1	Turn off	Yes

[1] All parameters can be set channel-selective

Interrupts/diagnostics alarms

7

7.1 Status and error displays

7.1.1 Status and error displays of the CPU part

LED display

The figure below shows the LED displays of the CPU part.

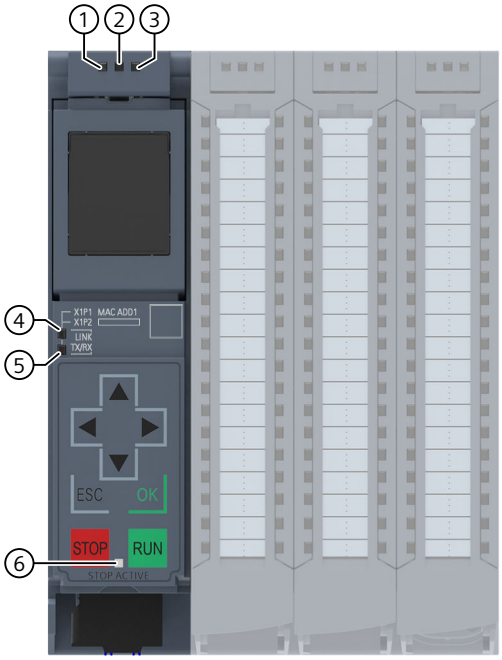

① RUN/STOP LED (yellow/green LED)
② ERROR LED (red LED)
③ MAINT LED (yellow LED)
④ LINK RX/TX LED for port X1 P1 (yellow/green LED)
⑤ LINK RX/TX LED for port X1 P2 (yellow/green LED)
⑥ STOP ACTIVE-LED (yellow LED)

Figure 7-1 LED display of the CPU 1512C-1 PN (without front flap)

Meaning of the RUN/STOP, ERROR and MAINT LEDs

The CPU has three LEDs for displaying the current operating mode and diagnostics status. The following table shows the meaning of the various combinations of colors for the RUN/STOP, ERROR and MAINT LEDs.

Table 7-1 Meaning of the LEDs

RUN/STOP LED	ERROR LED	MAINT LED	Meaning
LED off	LED off	LED off	Missing or insufficient supply voltage on the CPU.
LED off	LED flashes red	LED off	An error has occurred.
LED lit green	LED off	LED off	CPU is in RUN mode.
LED lit green	LED flashes red	LED off	A diagnostics event is pending.
LED lit green	LED off	LED lit yellow	Maintenance demanded for the plant. You need to promptly check/replace the affected hardware within a short period of time.
			Active Force job
			OPC UA server of the CPU expects initial trust lists and CRLs via the GDS push function.
LED lit green	LED off	LED flashes yellow	Bad configuration
LED lit yellow	LED flashes red	LED off	A diagnostics event is pending.
LED lit yellow	LED off	LED flashes yellow	Firmware update using SIMATIC Memory Card completed successfully.
LED lit yellow	LED off	LED off	CPU is in STOP mode.
			CPU runs a program with active breakpoints. The program is at a breakpoint.
LED lit yellow	LED flashes red	LED flashes yellow	The program on the SIMATIC memory card is causing an error.
			Firmware update using SIMATIC memory card has failed.
			The CPU has detected an error state. Additional information is available via the CPU diagnostic buffer.
LED flashes yellow	LED off	LED off	CPU is performing internal activities during STOP, e.g. ramp-up after STOP.
			Download of the user program from the SIMATIC memory card
			CPU carries out a program with active breakpoint. The program is presently moving from one breakpoint to another.
			Firmware update is being performed.
LED flashes yellow/green	LED off	LED off	Startup (transition from STOP → RUN)

RUN/STOP LED	ERROR LED	MAINT LED	Meaning
LED flashes yellow/green	LED flashes red	LED flashes yellow	Startup (CPU booting)
			Test of LEDs during startup, inserting a module.
			LED flashing test

Meaning of LINK RX/TX LED

Each port has a LINK RX/TX LED. The table below shows the various "LED scenarios" of the CPU ports.

Table 7-2 Meaning of the LED

LINK TX/RX LED	Meaning
LED off	There is no Ethernet connection between the PROFINET interface of the PROFINET device and the communication partner. No data is currently being sent/received via the PROFINET interface. There is no LINK connection.
LED flashes green	The CPU is performing an "LED flash test".
LED lit green	There is an Ethernet connection between the PROFINET interface of your PROFINET device and a communication partner.
LED flashes yellow/green	Data is currently being received from or sent to a communications partner on Ethernet via the PROFINET interface of the PROFINET device.

NOTE

"LED" instruction

You can read the status (e.g. "On" or "Off") of LEDs of a CPU or a module using the "LED" instruction. Note, however, that it is not possible to read the LED status of the LINK RX/TX LEDs on all S7-1500 CPUs.

You can find additional information on the "LED" instruction in the STEP 7 online help.

Meaning of the STOP ACTIVE LED

The following table shows the meaning of the STOP ACTIVE LED for the CPU 1512C-1 PN.

Table 7-3 Meaning of the LEDs

STOP ACTIVE LED	Meaning
LED lit yellow	The CPU is switched to "STOP" mode using the STOP button. • As long as the STOP ACTIVE LED is lit up, switching the CPU to RUN mode is only possible using the RUN button. • The CPU can then no longer be set to RUN mode via the display operation or via online functions. The state of the buttons is retained at power-off. If the CPU does not start up automatically after a power-on, you have to keep the STOP button pressed during start-up until the STOP ACTIVE LED is activated. • If an automatic start-up is to be reliably prevented after a power-up, the STOP button has to be kept pressed during the start-up of the CPU until the STOP ACTIVE LED is activated.

STOP ACTIVE LED	Meaning
□ LED off	• The CPU is set to "STOP" mode using the display or programming device and not with the STOP button on the device. • The CPU is in RUN mode.

7.1.2 Status and error displays of the analog on-board I/O

LED displays

The figure below shows the LED displays (status and error displays) of the analog on-board I/O.

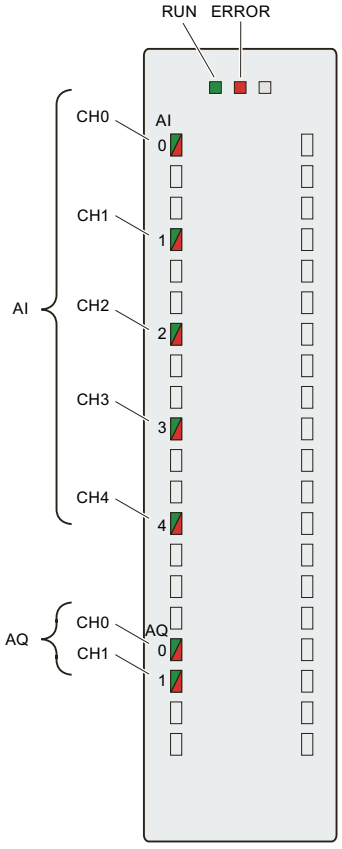

Figure 7-2 LED displays

Meaning of the LED displays

The following tables explain the meaning of the status and error displays. Remedial measures for diagnostics alarms can be found in the Interrupts and diagnostics of the analog on-board I/O (Page 129) section.

Table 7-4 RUN/ERROR status and error displays

LEDs		Meaning	Remedy
RUN	**ERROR**		
Off	Off	No voltage or voltage too low	• Turn on the CPU and/or the system power supply modules.
Flashes	Off	Analog on-board I/O starts up and flashes until valid parameter assignment.	---
On	Off	Parameters have been set for the analog on-board I/O.	
On	Flashes	Indicates module errors (at least one error is present on one channel, e.g. wire break).	Evaluate the diagnostics and eliminate the error (e.g. wire break).
Flashes	Flashes	Hardware defective.	Replace the compact CPU.

CHx LED

Table 7-5 CHx status display

CHx LED	Meaning	Remedy
Off	Channel disabled.	---
On	Channel parameters set and OK.	---
On	Channel parameters set, channel error present. Diagnostics alarm: e.g. wire break	Check the wiring. Disable diagnostics.

NOTE

Maintenance LED

During ramp-up, the firmware of the CPU checks the consistency of the calibration data of the analog on-board I/O stored by the SIEMENS Production. The yellow MAINT LED lights up if the firmware detects an inconsistency (e.g. an invalid value) or missing calibration data. The MAINT-LED is located next the red ERROR-LED on the analog on-board I/O.

Note that the MAINT LED on the analog on-board I/O is only intended for troubleshooting by SIEMENS. In normal condition, the MAINT-LED should not light up. However, if the LED is lit up, please contact SIEMENS "mySupport" at Internet (https://support.industry.siemens.com/My/ww/en/).

7.1.3 Status and error displays of the digital on-board I/O

LED displays

The figure below shows an example of the LED displays (status and error displays) of the first module of the digital on-board I/O. Remedial measures for diagnostics alarms can be found in the Interrupts and diagnostics of the digital on-board I/O (Page 132) section.

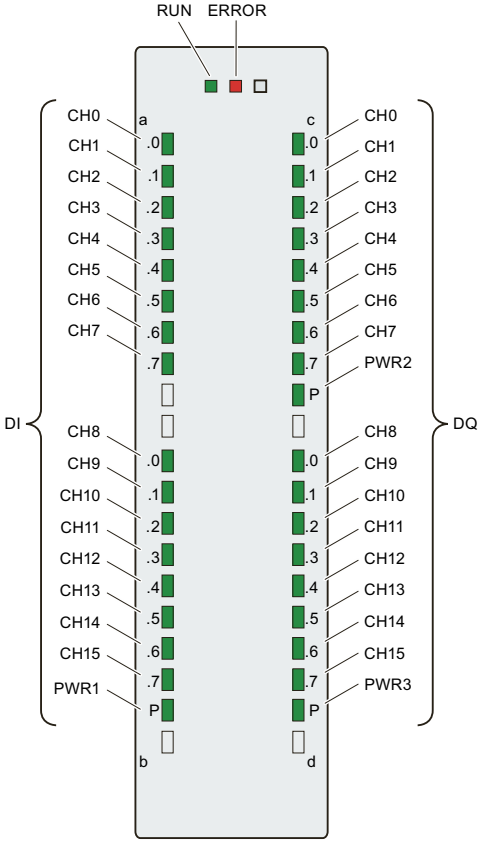

Figure 7-3 LED displays

Meaning of the LED displays

The following tables explain the meaning of the status and error displays.

RUN/ERROR LED

Table 7-6 RUN/ERROR status and error displays

LED		Meaning	Remedy
RUN	**ERROR**		
Off	Off	No voltage or voltage too low	• Turn on the CPU. • Check whether too many modules are inserted.
Flashes	Off	Digital on-board I/O starts up.	---
On	Off	Digital on-board I/O is ready for operation.	
On	Flashes	A diagnostics interrupt is pending. Supply voltage missing.	Check supply voltage L+.

PWRx LED

Table 7-7 PWRx status display

PWRx LED	Meaning	Remedy
Off	Supply voltage L+ to module too low or missing	Check supply voltage L+.
On	Supply voltage L+ is present and OK.	---

CHx LED

Table 7-8 CHx status display

CHx LED	Meaning	Remedy
Off	0 = Status of the input/output signal.	---
On	1 = Status of the input/output signal.	---

NOTE

For the status display, the digital inputs only take into account the filter time of the corresponding DI and not the filter time of the A/B/N signals of the fast counters (HSC).

For example, a static signal may be displayed when the DI has a configured input delay of 3.2 ms, even though a 100 kHz counter on these inputs still detects edge transitions.

7.2 Interrupts and diagnostics

7.2.1 Interrupts and diagnostics of the CPU part

For information on the topic of "Interrupts", refer to the STEP 7 (TIA Portal) online help.
For information on "Diagnostics" and "System alarms", refer to the Diagnostics (http://support.automation.siemens.com/WW/view/en/59192926) function manual.

7.2.2 Interrupts and diagnostics of the analog on-board I/O

Diagnostics interrupt

The analog on-board I/O generates a diagnostics interrupt at the following events:

Table 7-9 Diagnostics interrupt for inputs and outputs

Event	Diagnostics interrupt	
	Inputs	Outputs
Overflow	x	x
Underflow	x	x
Wire break	x [1]	x [2]
Short-circuit to ground	---	x [3]

1) Possible for the voltage measuring range (1 to 5 V), current measuring range (4 to 20 mA)
2) Possible for current output type
3) Possible for voltage output type

Hardware interrupt for inputs

The compact CPU can generate a hardware interrupt for the following events:

- Below low limit 1
- Above high limit 1
- Below low limit 2
- Above high limit 2

You can find detailed information on the event in the hardware interrupt organization block with the "RALARM" (read additional interrupt information) instruction and in the STEP 7 (TIA Portal) online help.

The start information of the organization block includes information on which channel of the analog on-board I/O triggered the hardware interrupt. The figure below shows the assignment to the bits of double word 8 in local data.

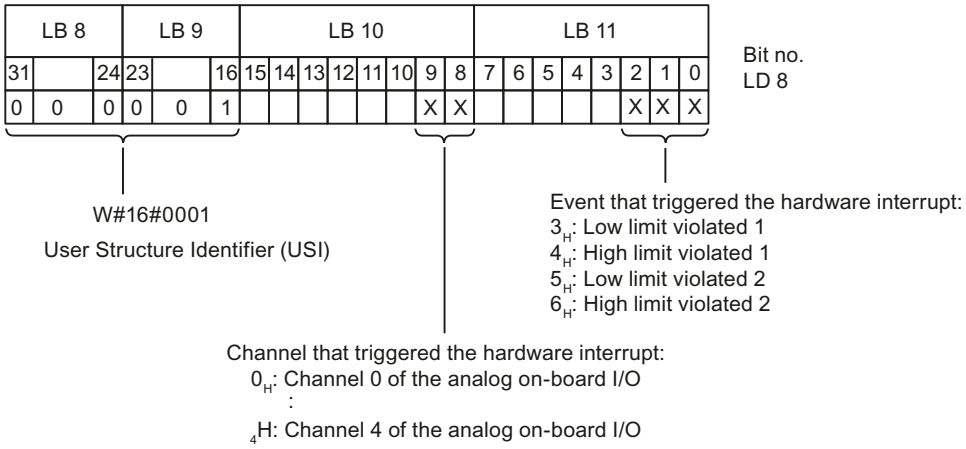

Figure 7-4 Start information of the organization block

Behavior when limits 1 and 2 are reached at the same time

If the two high limits 1 and 2 are reached at the same time, the analog on-board I/O always signals the hardware interrupt for high limit 1 first. The configured value for high limit 2 is irrelevant. After processing the hardware interrupt for high limit 1, the compact CPU triggers the hardware interrupt for high limit 2.

The analog on-board I/O behaves accordingly when the low limits are reached simultaneously. If the two low limits 1 and 2 are reached at the same time, the analog on-board I/O always signals the hardware interrupt for low limit 1 first. After processing the hardware interrupt for low limit 1, the analog on-board I/O triggers the hardware interrupt for low limit 2.

Structure of the additional interrupt information

Table 7-10 Structure of USI = W#16#0001

Data block name		Contents	Comment	Bytes
USI (User Structure Identifier)		W#16#0001	Additional hardware interrupt information of the analog on-board I/O	2
The channel that triggered the hardware interrupt follows.				
	Channel	B#16#00 to B#16#n	Number of the event-triggering channel (n = number of analog on-board I/O channels -1)	1
It is followed by the event that triggered the hardware interrupt.				
	Event	B#16#03	Below low limit 1	1
		B#16#04	Above high limit 1	
		B#16#05	Below low limit 2	
		B#16#06	Above high limit 2	

Diagnostics alarms

A diagnostics alarm is output for each diagnostics event and the ERROR LED flashes on the analog on-board I/O. The diagnostics alarms can, for example, be read out in the diagnostics buffer of the CPU. You can evaluate the error codes with the user program.

Table 7-11 Diagnostics alarms, their meaning and corrective measures

Diagnostics alarm	Error code	Meaning	Remedy
Wire break	6_H	Resistance of encoder circuit too high	Use a different encoder type or modify the wiring, for example, using cables with larger cross-section
		Interruption of the cable between the analog on-board I/O and sensor	Connect the cable
		Channel not connected (open)	• Disable diagnostics • Connect the channel
Overflow	7_H	Measuring range exceeded	Check the measuring range
		The output value set by the user program exceeds the valid rated range/overrange	Correct the output value
Underflow	8_H	Value below measuring range	Check the measuring range
		The output value set by the user program is below the valid rated range/underrange	Correct the output value
Short-circuit to ground	1_H	Overload at output	Eliminate overload
		Short-circuit of output Q_V to M_{ANA}	Eliminate the short-circuit

7.2.3 Interrupts and diagnostics of the digital on-board I/O

Diagnostics interrupt

A diagnostics alarm is output for each diagnostics event and the ERROR LED flashes on the digital on-board I/O. You can read out the diagnostics alarms, for example, in the diagnostics buffer of the CPU. You can evaluate the error codes with the user program.

Table 7-12 Diagnostics alarms, their meaning and corrective measures

Diagnostics alarm	Error code	Meaning	Corrective measures
Load voltage missing	11_H	No supply voltage L+	Feed supply voltage L+
Hardware interrupt lost	16_H	The digital on-board I/O cannot trigger an interrupt because the previous interrupt was not acknowledged; possibly a configuration error	• Change the interrupt processing in the CPU and reconfigure the digital on-board I/O.

Diagnostic interrupts when using high-speed counters

Table 7-13 Diagnostics alarms, their meaning and corrective measures

Diagnostics alarm	Error code	Meaning	Corrective measures
Illegal A/B signal ratio	500_H	• Time sequence of the A and B signals of the incremental encoder do not meet certain requirements. • Possible causes: – Signal frequency too high – Encoder is defective – Process wiring is incorrect	• Correct the process wiring • Check the encoder/sensor • Check the parameter assignment.

Hardware interrupt

The compact CPU can generate a hardware interrupt for the following events:

- Rising edge
- Falling edge

You will find detailed information on the event in the hardware interrupt organization block with the "RALRM" (read additional interrupt information) instruction and in the STEP 7 online help.

The start information of the organization block includes information on which channel triggered the hardware interrupt. The figure below shows the assignment to the bits of double word 8 in local data.

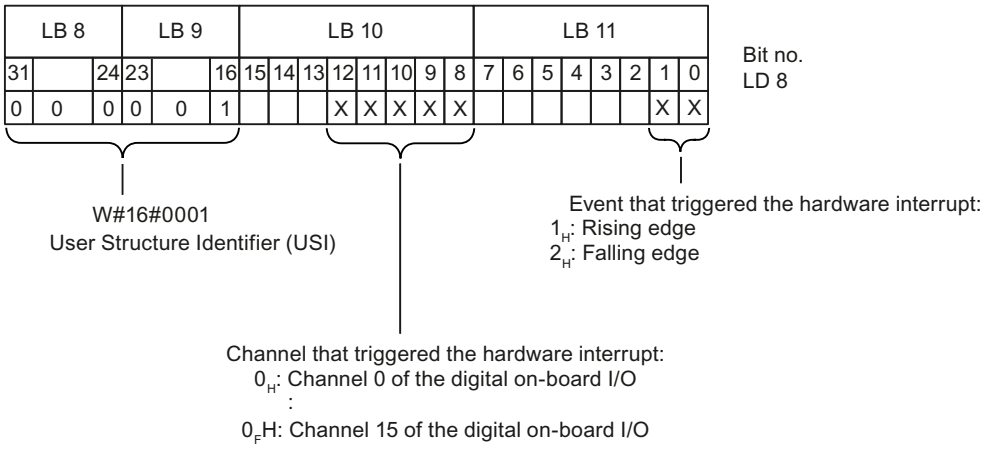

Figure 7-5 Start information of the organization block

Structure of the additional interrupt information

Table 7-14 Structure of USI = W#16#0001

Data block name	Contents	Comment	Bytes
USI (User Structure Identifier)	W#16#0001	Additional interrupt information of the hardware interrupts of the digital on-board I/O	2
The channel that triggered the hardware interrupt follows.			
Channel	B#16#00 to B#16#0F	Number of the event-triggering channel (channel 0 to channel 15)	1
The error event that triggered the hardware interrupt follows.			
Event	B#16#01	Rising edge	1
	B#16#02	Falling edge	

Hardware interrupts when using the high-speed counters

Table 7-15 Hardware interrupts and their meaning

Hardware interrupt	Event type number	Meaning
Opening of the internal gate (gate start)	1	When the internal gate is opened, the technology function triggers a hardware interrupt in the CPU.
Closing of the internal gate (gate stop)	2	When the internal gate is closed, the technology functions trigger a hardware interrupt in the CPU.
Overflow (high counting limit violated)	3	When the count value exceeds the high counting limit, the technology function triggers a hardware interrupt in the CPU.
Underflow (low counting limit violated)	4	When the count value falls below the low counting limit, the technology function triggers a hardware interrupt in the CPU.
Comparison event for DQ0 occurred	5	When a comparison event for DQ0 occurs due to the selected comparison condition, the technology function triggers a hardware interrupt in the CPU. When the change of the count value for an incremental or pulse encoder was not caused by a count pulse, the technology function does not trigger a hardware interrupt.
Comparison event for DQ1 occurred	6	When a comparison event for DQ1 occurs due to the selected comparison condition, the technology function triggers a hardware interrupt in the CPU. When the change of the count value for an incremental or pulse encoder was not caused by a count pulse, the technology function does not trigger a hardware interrupt.
Zero crossing	7	At a zero crossing of the counter or position value, the technology function triggers a hardware interrupt in the CPU.
New Capture value present[1)]	8	When the current counter or position value is saved as a Capture value, the technology function triggers a hardware interrupt in the CPU.
Synchronization of the counter by an external signal	9	At the synchronization of the counter by an N signal or edge at DI, the technology function triggers a hardware interrupt in the CPU.
Direction reversal[2)]	10	When the count value or position value changes direction, the technology function triggers a hardware interrupt in the CPU.

1) Can only be set in counting mode

2) Feedback bit STS_DIR is preset to "0". When the first count value or position value change occurs in the reverse direction directly after switching on the digital on-board I/O, a hardware interrupt is not triggered.

Technical specifications

8

Technical specifications of the CPU 1512C-1 PN

The following table shows the technical specifications as of 05/2024. You will find a data sheet including daily updated technical specifications on the Internet (https://support.industry.siemens.com/cs/ww/en/pv/6ES7512-1CM03-0AB0/td?dl=en).

Article number	6ES7512-1CM03-0AB0
General information	
Product type designation	CPU 1512C-1 PN
HW functional status	FS01
Firmware version	V3.1
• FW update possible	Yes
Product function	
• I&M data	Yes; I&M0 to I&M3
• Isochronous mode	Yes; with minimal OB 6x cycle of 500 µs (distributed)
• SysLog	Yes
Engineering with	
• STEP 7 TIA Portal configurable/integrated from version	V19 (FW V3.1); with older TIA Portal versions configurable as 6ES7512-1CK00-0AB0
Configuration control	
via dataset	Yes
Display	
Screen diagonal [cm]	3.45 cm
Control elements	
Number of keys	8
Mode buttons	2
Supply voltage	
Rated value (DC)	24 V
permissible range, lower limit (DC)	19.2 V; 20.4 V DC, for supplying the digital inputs/outputs
permissible range, upper limit (DC)	28.8 V
Reverse polarity protection	Yes
Mains buffering	
• Mains/voltage failure stored energy time	5 ms; Refers to the power supply on the CPU section
• Repeat rate, min.	1/s

Article number	6ES7512-1CM03-0AB0
Input current	
Current consumption (rated value)	0.66 A; without DI/DO load
Current consumption, max.	1 A; without DI/DO load
Inrush current, max.	1.22 A; Rated value
I^2t	0.6 $A^2 \cdot s$
Digital inputs	
• from load voltage L+ (without load), max.	20 mA; per group
Digital outputs	
• from load voltage L+, max.	30 mA; Per group, without load
output voltage / header	
Rated value (DC)	24 V
Encoder supply	
Number of outputs	2; One common 24 V encoder supply per 16 digital inputs
24 V encoder supply	
• 24 V	Yes; L+ (-0.8 V)
• Short-circuit protection	Yes
• Output current, max.	1 A
Power	
Infeed power to the backplane bus	10 W
Power consumption from the backplane bus (balanced)	9 W
Power loss	
Power loss, typ.	6 W
Memory	
Number of slots for SIMATIC memory card	1
SIMATIC memory card required	Yes
Work memory	
• integrated (for program)	400 kbyte
• integrated (for data)	2 Mbyte
Load memory	
• Plug-in (SIMATIC Memory Card), max.	32 Gbyte
Backup	
• maintenance-free	Yes
CPU processing times	
for bit operations, typ.	25 ns
for word operations, typ.	32 ns
for fixed point arithmetic, typ.	42 ns
for floating point arithmetic, typ.	170 ns
CPU-blocks	
Number of elements (total)	4 000; Blocks (OB, FB, FC, DB) and UDTs

Article number	6ES7512-1CM03-0AB0
DB	
• Number range	1 ... 60 999; subdivided into: number range that can be used by the user: 1 ... 59 999, and number range of DBs created via SFC 86: 60 000 ... 60 999
• Size, max.	2 Mbyte; For DBs with absolute addressing, the max. size is 64 KB
FB	
• Number range	0 ... 65 535
• Size, max.	400 kbyte
FC	
• Number range	0 ... 65 535
• Size, max.	400 kbyte
OB	
• Size, max.	400 kbyte
• Number of free cycle OBs	100
• Number of time alarm OBs	20
• Number of delay alarm OBs	20
• Number of cyclic interrupt OBs	20; With minimum OB 3x cycle of 250 µs
• Number of process alarm OBs	50
• Number of DPV1 alarm OBs	3
• Number of isochronous mode OBs	1
• Number of technology synchronous alarm OBs	2
• Number of startup OBs	100
• Number of asynchronous error OBs	4
• Number of synchronous error OBs	2
• Number of diagnostic alarm OBs	1
Nesting depth	
• per priority class	24
Counters, timers and their retentivity	
S7 counter	
• Number	2 048
Retentivity	
– adjustable	Yes
IEC counter	
• Number	Any (only limited by the main memory)
Retentivity	
– adjustable	Yes
S7 times	
• Number	2 048

Article number	6ES7512-1CM03-0AB0
Retentivity	
– adjustable	Yes
IEC timer	
• Number	Any (only limited by the main memory)
Retentivity	
– adjustable	Yes
Data areas and their retentivity	
Retentive data area (incl. timers, counters, flags), max.	256 kbyte; in total; available retentive memory for bit memories, timers, counters, DBs, and technology data (axes): 216 KB
Extended retentive data area (incl. timers, counters, flags), max.	2 Mbyte; When using PS 6 0W 24/48/60 V DC HF
Flag	
• Size, max.	16 kbyte
• Number of clock memories	8; 8 clock memory bit, grouped into one clock memory byte
Data blocks	
• Retentivity adjustable	Yes
• Retentivity preset	No
Local data	
• per priority class, max.	64 kbyte; max. 16 KB per block
Address area	
Number of IO modules	2 048; max. number of modules / submodules
I/O address area	
• Inputs	32 kbyte; All inputs are in the process image
• Outputs	32 kbyte; All outputs are in the process image
per integrated IO subsystem	
– Inputs (volume)	8 kbyte
– Outputs (volume)	8 kbyte
per CM/CP	
– Inputs (volume)	8 kbyte
– Outputs (volume)	8 kbyte
Subprocess images	
• Number of subprocess images, max.	32
Hardware configuration	
Number of distributed IO systems	32; A distributed I/O system is characterized not only by the integration of distributed I/O via PROFINET or PROFIBUS communication modules, but also by the connection of I/O via AS-i master modules or links (e.g. IE/PB-Link)
Number of DP masters	
• Via CM	6; A maximum of 6 CMs/CPs (PROFIBUS, PROFINET, Ethernet) can be inserted in total

Article number	6ES7512-1CM03-0AB0
Number of IO Controllers	
• integrated	1
• Via CM	6; A maximum of 6 CMs/CPs (PROFIBUS, PROFINET, Ethernet) can be inserted in total
Rack	
• Modules per rack, max.	32; CPU + 31 modules
• Number of lines, max.	1
PtP CM	
• Number of PtP CMs	the number of connectable PtP CMs is only limited by the number of available slots
Time of day	
Clock	
• Type	Hardware clock
• Backup time	6 wk; At 40 °C ambient temperature, typically
• Deviation per day, max.	10 s; Typ.: 2 s
Operating hours counter	
• Number	16
Clock synchronization	
• supported	Yes
• in AS, master	Yes
• in AS, slave	Yes
• on Ethernet via NTP	Yes
Digital inputs	
integrated channels (DI)	32
Digital inputs, parameterizable	Yes
Source/sink input	P-reading
Input characteristic curve in accordance with IEC 61131, type 3	Yes
Digital input functions, parameterizable	
• Gate start/stop	Yes
• Capture	Yes
• Synchronization	Yes
Input voltage	
• Type of input voltage	DC
• Rated value (DC)	24 V
• for signal "0"	-3 to +5V
• for signal "1"	+11 to +30V
Input current	
• for signal "1", typ.	2.5 mA

Article number	6ES7512-1CM03-0AB0
Input delay (for rated value of input voltage)	
for standard inputs	
– parameterizable	Yes; none / 0.05 / 0.1 / 0.4 / 1.6 / 3.2 / 12.8 / 20 ms
– at "0" to "1", min.	4 µs; for parameterization "none"
– at "0" to "1", max.	20 ms
– at "1" to "0", min.	4 µs; for parameterization "none"
– at "1" to "0", max.	20 ms
for interrupt inputs	
– parameterizable	Yes; Same as for standard inputs
for technological functions	
– parameterizable	Yes; Same as for standard inputs
Cable length	
• shielded, max.	1 000 m; 600 m for technological functions; depending on input frequency, encoder and cable quality; max. 50 m at 100 kHz
• unshielded, max.	600 m; for technological functions: No
Digital outputs	
Type of digital output	Transistor
integrated channels (DO)	32
Current-sourcing	Yes; Push-pull output
Short-circuit protection	Yes; electronic/thermal
• Response threshold, typ.	1.6 A with standard output, 0.5 A with high-speed output; see manual for details
Limitation of inductive shutdown voltage to	Connector X11: -0.8 V; connector X12: L+ (-53 V)
Controlling a digital input	Yes
Accuracy of pulse duration	Up to ±100 ppm ±2 µs at high-speed output; see manual for details
minimum pulse duration	2 µs; With High Speed output
Digital output functions, parameterizable	
• Switching tripped by comparison values	Yes; As output signal of a high-speed counter
• PWM output	Yes
– Number, max.	4
– Cycle duration, parameterizable	Yes
– ON period, min.	0 %
– ON period, max.	100 %
– Resolution of the duty cycle	0.0036 %; For S7 analog format, min. 40 ns
• Frequency output	Yes

Article number	6ES7512-1CM03-0AB0
Switching capacity of the outputs	
• with resistive load, max.	0.5 A; 0.1 A with high-speed output, i.e. when using a high-speed output; see manual for details
• on lamp load, max.	5 W; 1 W with high-speed output, i.e. when using a high-speed output; see manual for details
Load resistance range	
• lower limit	48 Ω; 240 ohms with high-speed output, i.e. when using a high-speed output; see manual for details
• upper limit	12 kΩ
Output voltage	
• Type of output voltage	DC
• for signal "0", max.	1 V; With high-speed output, i.e. when using a high-speed output; see manual for details
• for signal "1", min.	23.2 V; L+ (-0.8 V)
Output current	
• for signal "1" rated value	0.5 A; 0.1 A with high-speed output, i.e. when using a high-speed output, observe derating; see manual for details
• for signal "1" permissible range, min.	2 mA
• for signal "1" permissible range, max.	0.6 A; 0.12 A with high-speed output, i.e. when using a high-speed output, observe derating; see manual for details
• for signal "0" residual current, max.	0.5 mA
Output delay with resistive load	
• "0" to "1", max.	200 µs
• "1" to "0", max.	500 µs; Load-dependent
for technological functions	
– "0" to "1", max.	5 µs; Depending on the output used, see additional description in manual
– "1" to "0", max.	5 µs; Depending on the output used, see additional description in manual
Parallel switching of two outputs	
• for logic links	Yes; for technological functions: No
• for uprating	No
• for redundant control of a load	Yes; for technological functions: No
Switching frequency	
• with resistive load, max.	100 kHz; For high-speed output, 100 Hz for standard output
• with inductive load, max.	0.5 Hz; Acc. to IEC 60947-5-1, DC-13; observe derating curve
• on lamp load, max.	10 Hz

Article number	6ES7512-1CM03-0AB0
Total current of the outputs	
• Current per channel, max.	0.5 A; see additional description in the manual
• Current per group, max.	8 A; see additional description in the manual
• Current per power supply, max.	4 A; 2 power supplies for each group, current per power supply max. 4 A, see additional description in manual
for technological functions	
– Current per channel, max.	0.5 A; see additional description in the manual
Relay outputs	
• Number of relay outputs	0
Cable length	
• shielded, max.	1 000 m; 600 m for technological functions; depending on output frequency, load, and cable quality; max. 50 m at 100 kHz
• unshielded, max.	600 m; for technological functions: No
Analog inputs	
Number of analog inputs	5; 4x for U/I, 1x for R/RTD
• For current measurement	4; max.
• For voltage measurement	4; max.
• For resistance/resistance thermometer measurement	1
permissible input voltage for voltage input (destruction limit), max.	28.8 V
permissible input current for current input (destruction limit), max.	40 mA
Cycle time (all channels), min.	1 ms; Dependent on the parameterized interference frequency suppression; for details, see conversion procedure in manual
Technical unit for temperature measurement adjustable	Yes; °C/°F/K
Input ranges (rated values), voltages	
• 0 to +10 V	Yes; Physical measuring range: ± 10 V
– Input resistance (0 to 10 V)	100 kΩ
• 1 V to 5 V	Yes; Physical measuring range: ± 10 V
– Input resistance (1 V to 5 V)	100 kΩ
• -10 V to +10 V	Yes
– Input resistance (-10 V to +10 V)	100 kΩ
• -5 V to +5 V	Yes; Physical measuring range: ± 10 V
– Input resistance (-5 V to +5 V)	100 kΩ
Input ranges (rated values), currents	
• 0 to 20 mA	Yes; Physical measuring range: ± 20 mA
– Input resistance (0 to 20 mA)	50 Ω; Plus approx. 55 ohm for overvoltage protection by PTC

Article number	6ES7512-1CM03-0AB0
• -20 mA to +20 mA	Yes
– Input resistance (-20 mA to +20 mA)	50 Ω; Plus approx. 55 ohm for overvoltage protection by PTC
• 4 mA to 20 mA	Yes; Physical measuring range: ± 20 mA
– Input resistance (4 mA to 20 mA)	50 Ω; Plus approx. 55 ohm for overvoltage protection by PTC
Input ranges (rated values), resistance thermometer	
• Ni 100	Yes; Standard/climate
– Input resistance (Ni 100)	10 MΩ
• Pt 100	Yes; Standard/climate
– Input resistance (Pt 100)	10 MΩ
Input ranges (rated values), resistors	
• 0 to 150 ohms	Yes; Physical measuring range: 0 ... 600 ohms
– Input resistance (0 to 150 ohms)	10 MΩ
• 0 to 300 ohms	Yes; Physical measuring range: 0 ... 600 ohms
– Input resistance (0 to 300 ohms)	10 MΩ
• 0 to 600 ohms	Yes
– Input resistance (0 to 600 ohms)	10 MΩ
Cable length	
• shielded, max.	800 m; for U/I, 200 m for R/RTD
Analog outputs	
integrated channels (AO)	2
Voltage output, short-circuit protection	Yes
Cycle time (all channels), min.	1 ms; Dependent on the parameterized interference frequency suppression; for details, see conversion procedure in manual
Output ranges, voltage	
• 0 to 10 V	Yes
• 1 V to 5 V	Yes
• -10 V to +10 V	Yes
Output ranges, current	
• 0 to 20 mA	Yes
• -20 mA to +20 mA	Yes
• 4 mA to 20 mA	Yes
Load impedance (in rated range of output)	
• with voltage outputs, min.	1 kΩ
• with voltage outputs, capacitive load, max.	100 nF
• with current outputs, max.	500 Ω
• with current outputs, inductive load, max.	1 mH

Article number	6ES7512-1CM03-0AB0
Cable length	
• shielded, max.	200 m
Analog value generation for the inputs	
Integration and conversion time/resolution per channel	
• Resolution with overrange (bit including sign), max.	16 bit
• Integration time, parameterizable	Yes; 2.5 / 16.67 / 20 / 100 ms, acts on all channels
• Interference voltage suppression for interference frequency f1 in Hz	400 / 60 / 50 / 10
Smoothing of measured values	
• parameterizable	Yes
• Step: None	Yes
• Step: low	Yes
• Step: Medium	Yes
• Step: High	Yes
Analog value generation for the outputs	
Integration and conversion time/resolution per channel	
• Resolution with overrange (bit including sign), max.	16 bit
Settling time	
• for resistive load	1.5 ms
• for capacitive load	2.5 ms
• for inductive load	2.5 ms
Encoder	
Connection of signal encoders	
• for voltage measurement	Yes
• for current measurement as 4-wire transducer	Yes
• for resistance measurement with two-wire connection	Yes
• for resistance measurement with three-wire connection	Yes
• for resistance measurement with four-wire connection	Yes
Connectable encoders	
• 2-wire sensor	Yes
– permissible quiescent current (2-wire sensor), max.	1.5 mA

Article number	6ES7512-1CM03-0AB0
Encoder signals, incremental encoder (asymmetrical)	
• Input voltage	24 V
• Input frequency, max.	100 kHz
• Counting frequency, max.	400 kHz; with quadruple evaluation
• Signal filter, parameterizable	Yes
• Incremental encoder with A/B tracks, 90° phase offset	Yes
• Incremental encoder with A/B tracks, 90° phase offset and zero track	Yes
• pulse encoder	Yes
• pulse encoder with direction	Yes
• pulse encoder with one impulse signal per count direction	Yes
Errors/accuracies	
Linearity error (relative to input range), (+/-)	0.1 %
Temperature error (relative to input range), (+/-)	0.005 %/K
Crosstalk between the inputs, max.	-60 dB
Repeat accuracy in steady state at 25 °C (relative to input range), (+/-)	0.05 %
Output ripple (relative to output range, bandwidth 0 to 50 kHz), (+/-)	0.02 %
Linearity error (relative to output range), (+/-)	0.15 %
Temperature error (relative to output range), (+/-)	0.005 %/K
Crosstalk between the outputs, max.	-80 dB
Repeat accuracy in steady state at 25 °C (relative to output range), (+/-)	0.05 %
Operational error limit in overall temperature range	
• Voltage, relative to input range, (+/-)	0.3 %
• Current, relative to input range, (+/-)	0.3 %
• Resistance, relative to input range, (+/-)	0.3 %
• Resistance thermometer, relative to input range, (+/-)	Pt100 Standard: ±2 K, Pt100 Climate: ±1 K, Ni100 Standard: ±1.2 K, Ni100 Climate: ±1 K
• Voltage, relative to output range, (+/-)	0.3 %
• Current, relative to output range, (+/-)	0.3 %

Article number	6ES7512-1CM03-0AB0
Basic error limit (operational limit at 25 °C)	
• Voltage, relative to input range, (+/-)	0.2 %
• Current, relative to input range, (+/-)	0.2 %
• Resistance, relative to input range, (+/-)	0.2 %
• Resistance thermometer, relative to input range, (+/-)	Pt100 Standard: ±1 K, Pt100 Climate: ±0.5 K, Ni100 Standard: ±0.6 K, Ni100 Climate: ±0.5 K
• Voltage, relative to output range, (+/-)	0.2 %
• Current, relative to output range, (+/-)	0.2 %
Interference voltage suppression for f = n x (f1 +/- 1 %), f1 = interference frequency	
• Series mode interference (peak value of interference < rated value of input range), min.	30 dB
• Common mode voltage, max.	10 V
• Common mode interference, min.	60 dB; at 400 Hz: 50 dB
Interfaces	
Number of PROFINET interfaces	1
1. Interface	
Interface types	
• RJ 45 (Ethernet)	Yes; X1
• Number of ports	2
• integrated switch	Yes
Protocols	
• IP protocol	Yes; IPv4
• PROFINET IO Controller	Yes
• PROFINET IO Device	Yes
• SIMATIC communication	Yes
• Open IE communication	Yes; Optionally also encrypted
• Web server	Yes
• Media redundancy	Yes

Article number	6ES7512-1CM03-0AB0
PROFINET IO Controller	
Services	
– Isochronous mode	Yes
– Direct data exchange	Yes; Requirement: IRT and isochronous mode (MRPD optional)
– IRT	Yes
– PROFIenergy	Yes; per user program
– Prioritized startup	Yes; Max. 32 PROFINET devices
– Number of connectable IO Devices, max.	128; In total, up to 512 distributed I/O devices can be connected via AS-i, PROFIBUS or PROFINET
– Of which IO devices with IRT, max.	64
– Number of connectable IO Devices for RT, max.	128
– of which in line, max.	128
– Number of IO Devices that can be simultaneously activated/deactivated, max.	8; in total across all interfaces
– Number of IO Devices per tool, max.	8
– Updating times	The minimum value of the update time also depends on communication share set for PROFINET IO, on the number of IO devices, and on the quantity of configured user data
– PROFINET Security Class	1
Update time for IRT	
– for send cycle of 250 µs	250 µs to 4 ms; Note: In the case of IRT with isochronous mode, the minimum update time of 500 µs of the isochronous OB is decisive
– for send cycle of 500 µs	500 µs to 8 ms
– for send cycle of 1 ms	1 ms to 16 ms
– for send cycle of 2 ms	2 ms to 32 ms
– for send cycle of 4 ms	4 ms to 64 ms
– With IRT and parameterization of "odd" send cycles	Update time = set "odd" send clock (any multiple of 125 µs: 375 µs, 625 µs ... 3 875 µs)
Update time for RT	
– for send cycle of 250 µs	250 µs to 128 ms
– for send cycle of 500 µs	500 µs to 256 ms
– for send cycle of 1 ms	1 ms to 512 ms
– for send cycle of 2 ms	2 ms to 512 ms
– for send cycle of 4 ms	4 ms to 512 ms

Article number	6ES7512-1CM03-0AB0
PROFINET IO Device	
Services	
– Isochronous mode	No
– IRT	Yes
– PROFIenergy	Yes; per user program
– Shared device	Yes
– Number of IO Controllers with shared device, max.	4
– activation/deactivation of I-devices	Yes; per user program
– Asset management record	Yes; per user program
– PROFINET Security Class	SNMP Configuration and DCP Read Only
Interface types	
RJ 45 (Ethernet)	
• 100 Mbps	Yes
• Autonegotiation	Yes
• Autocrossing	Yes
• Industrial Ethernet status LED	Yes
Protocols	
Number of connections	
• Number of connections, max.	128; via integrated interfaces of the CPU and connected CPs / CMs
• Number of connections reserved for ES/HMI/web	10
• Number of connections via integrated interfaces	88
• Number of S7 routing paths	16
Redundancy mode	
• H-Sync forwarding	Yes
Media redundancy	
– Media redundancy	only via 1st interface (X1)
– MRP	Yes; MRP Automanager according to IEC 62439-2 Edition 2.0, MRP Manager; MRP Client
– MRP interconnection, supported	Yes; as MRP ring node according to IEC 62439-2 Edition 3.0
– MRPD	Yes; Requirement: IRT
– Switchover time on line break, typ.	200 ms; For MRP, bumpless for MRPD
– Number of stations in the ring, max.	50

Article number	6ES7512-1CM03-0AB0
SIMATIC communication	
• PG/OP communication	Yes; encryption with TLS V1.3 pre-selected
• S7 routing	Yes
• Data record routing	Yes
• S7 communication, as server	Yes
• S7 communication, as client	Yes
• User data per job, max.	See online help (S7 communication, user data size)
Open IE communication	
• TCP/IP	Yes
– Data length, max.	64 kbyte
– several passive connections per port, supported	Yes
• ISO-on-TCP (RFC1006)	Yes
– Data length, max.	64 kbyte
• UDP	Yes
– Data length, max.	2 kbyte; 1 472 bytes for UDP broadcast
– UDP multicast	Yes; max. 78 multicast circuits
• DHCP	Yes
• DNS	Yes
• SNMP	Yes
• DCP	Yes
• LLDP	Yes
• Encryption	Yes; Optional
Web server	
• HTTP	Yes; Standard and user pages
• HTTPS	Yes; Standard and user pages
• web API	
– Number of sessions, max.	50
– number of simultaneous HTTP calls, max.	4
– HTTP request body, max.	131 072 byte

Article number	6ES7512-1CM03-0AB0
OPC UA	
• Runtime license required	Yes; "Small" license required
• OPC UA Client	Yes; Data Access (registered Read/Write), Method Call
– Application authentication	Yes
– Security policies	Available security policies: None, Basic128Rsa15, Basic256Rsa15, Basic256Sha256
– User authentication	"anonymous" or by user name & password
– Number of connections, max.	4
– Number of nodes of the client interfaces, recommended max.	1 000
– Number of elements for one call of OPC_UA_NodeGetHandleList/OPC_UA_ReadList/OPC_UA_WriteList, max.	300
– Number of elements for one call of OPC_UA_NameSpaceGetIndexList, max.	20
– Number of elements for one call of OPC_UA_MethodGetHandleList, max.	100
– Number of simultaneous calls of the client instructions for session management, per connection, max.	1
– Number of simultaneous calls of the client instructions for data access, per connection, max.	5
– Number of registerable nodes, max.	5 000
– Number of registerable method calls of OPC_UA_MethodCall, max.	100
– Number of inputs/outputs when calling OPC_UA_MethodCall, max.	20

Article number	6ES7512-1CM03-0AB0
• OPC UA Server	Yes; Data Access (Read, Write, Subscribe), Method Call, Alarms & Condition (A&C), Custom Address Space
– Application authentication	Yes
– Security policies	available security policies: None, Basic128Rsa15, Basic256Rsa15, Basic256Sha256, Aes128Sha256RsaOaep, Aes256Sha256RsaPss
– User authentication	"anonymous" or by user name & password
– GDS support (certificate management)	Yes
– Number of sessions, max.	32
– Number of accessible variables, max.	50 000
– Number of registerable nodes, max.	10 000
– Number of subscriptions per session, max.	50
– Sampling interval, min.	100 ms
– Publishing interval, min.	200 ms
– Number of server methods, max.	20
– Number of inputs/outputs per server method, max.	20
– Number of monitored items, recommended max.	4 000; for 1 s sampling interval and 1 s send interval
– Number of server interfaces, max.	10 of each "Server interfaces" / "Companion specification" type and 20 of the type "Reference namespace"
– Number of nodes for user-defined server interfaces, max.	15 000
• Alarms and Conditions	Yes
– Number of program alarms	100
– Number of alarms for system diagnostics	50
Further protocols	
• MODBUS	Yes; MODBUS TCP
S7 message functions	
Number of login stations for message functions, max.	32
number of subscriptions, max.	250
number of tags/attributes for subscriptions, max.	2 000
Program alarms	Yes
Number of configurable program messages, max.	5 000; Program messages are generated by the "Program_Alarm" block, ProDiag or GRAPH
Number of loadable program messages in RUN, max.	5 000

Article number	6ES7512-1CM03-0AB0
Number of simultaneously active program alarms	
• Number of program alarms	600
• Number of alarms for system diagnostics	100
• Number of alarms for motion technology objects	160
Test commissioning functions	
Joint commission (Team Engineering)	Yes; Parallel online access possible for up to 5 engineering systems
Status block	Yes; Up to 8 simultaneously (in total across all ES clients)
Single step	No
Number of breakpoints	8
Profiling	Yes
Status/control	
• Status/control variable	Yes
• Variables	Inputs/outputs, memory bits, DBs, distributed I/Os, timers, counters
• Number of variables, max.	
– of which status variables, max.	200; per job
– of which control variables, max.	200; per job
Forcing	
• Forcing	Yes
• Forcing, variables	Peripheral inputs/outputs
• Number of variables, max.	200
Diagnostic buffer	
• present	Yes
• Number of entries, max.	1 000
– of which powerfail-proof	500
Traces	
• Number of configurable Traces	4; Up to 512 KB of data per trace are possible
Interrupts/diagnostics/status information	
Alarms	
• Diagnostic alarm	Yes
• Hardware interrupt	Yes
Diagnoses	
• Monitoring the supply voltage	Yes
• Wire-break	Yes; for analog inputs/outputs, see description in manual
• Short-circuit	Yes; for analog outputs, see description in manual
• A/B transition error at incremental encoder	Yes

Article number	6ES7512-1CM03-0AB0
Diagnostics indication LED	
• RUN/STOP LED	Yes
• ERROR LED	Yes
• MAINT LED	Yes
• STOP ACTIVE LED	Yes
• Monitoring of the supply voltage (PWR-LED)	Yes
• Channel status display	Yes
• for channel diagnostics	Yes; For analog inputs/outputs
• Connection display LINK TX/RX	Yes
Supported technology objects	
Motion Control	Yes; Note: The number of technology objects affects the cycle time of the PLC program; selection guide via the TIA Selection Tool
• Number of available Motion Control resources for technology objects	1 120
• Required Motion Control resources	
– per speed-controlled axis	40
– per positioning axis	80
– per synchronous axis	160
– per external encoder	80
– per output cam	20
– per cam track	160
– per probe	40
• Positioning axis	
– Number of positioning axes at motion control cycle of 4 ms (typical value)	11
– Number of positioning axes at motion control cycle of 8 ms (typical value)	14
Controller	
• PID_Compact	Yes; Universal PID controller with integrated optimization
• PID_3Step	Yes; PID controller with integrated optimization for valves
• PID-Temp	Yes; PID controller with integrated optimization for temperature
Counting and measuring	
• High-speed counter	Yes
Integrated Functions	
Counter	
• Number of counters	6
• Counting frequency, max.	400 kHz; with quadruple evaluation

Article number	6ES7512-1CM03-0AB0
Counting functions	
• Continuous counting	Yes
• Counter response parameterizable	Yes
• Hardware gate via digital input	Yes
• Software gate	Yes
• Event-controlled stop	Yes
• Synchronization via digital input	Yes
• Counting range, parameterizable	Yes
Comparator	
– Number of comparators	2; per count channel; see manual for details
– Direction dependency	Yes
– Can be changed from user program	Yes
Position detection	
• Incremental acquisition	Yes
• Suitable for S7-1500 Motion Control	Yes
Measuring functions	
• Measuring time, parameterizable	Yes
• Dynamic measurement period adjustment	Yes
• Number of thresholds, parameterizable	2
Measuring range	
– Frequency measurement, min.	0.04 Hz
– Frequency measurement, max.	400 kHz; with quadruple evaluation
– Cycle duration measurement, min.	2.5 µs
– Cycle duration measurement, max.	25 s
Accuracy	
– Frequency measurement	100 ppm; depending on measuring interval and signal evaluation
– Cycle duration measurement	100 ppm; depending on measuring interval and signal evaluation
– Velocity measurement	100 ppm; depending on measuring interval and signal evaluation
Potential separation	
Potential separation digital inputs	
• between the channels	No
• between the channels, in groups of	16
Potential separation digital outputs	
• between the channels	No
• between the channels, in groups of	16

Article number	6ES7512-1CM03-0AB0
Potential separation channels	
• between the channels and backplane bus	Yes
• Between the channels and load voltage L+	No
Ambient conditions	
Ambient temperature during operation	
• horizontal installation, min.	-30 °C; No condensation
• horizontal installation, max.	60 °C; note derating data for onboard I/O in the manual. Display: 50 °C, at an operating temperature of typically 50 °C, the display is switched off
• vertical installation, min.	-30 °C; No condensation
• vertical installation, max.	40 °C; note derating data for onboard I/O in the manual. Display: 40 °C, at an operating temperature of typically 40 °C, the display is switched off
Ambient temperature during storage/transportation	
• min.	-40 °C
• max.	70 °C
Altitude during operation relating to sea level	
• Installation altitude above sea level, max.	5 000 m; Restrictions for installation altitudes > 2 000 m, see manual
configuration / header	
configuration / programming / header	
Programming language	
– LAD	Yes
– FBD	Yes
– STL	Yes
– SCL	Yes
– GRAPH	Yes
Know-how protection	
• User program protection/password protection	Yes
• Copy protection	Yes
• Block protection	Yes

Article number	6ES7512-1CM03-0AB0
Access protection	
• protection of confidential configuration data	Yes
• Password for display	Yes
• Protection level: Write protection	Yes
• Protection level: Read/write protection	Yes
• Protection level: Write protection for Failsafe	No
• Protection level: Complete protection	Yes
• User administration	Yes; device-wide
programming / cycle time monitoring / header	
• lower limit	adjustable minimum cycle time
• upper limit	adjustable maximum cycle time
Dimensions	
Width	110 mm
Height	147 mm
Depth	129 mm
Weights	
Weight, approx.	1 235 g; with front connector

Power reduction (derating) to total current of digital outputs (per power supply)

The following figure shows the load rating of the digital outputs in relation to the mounting position and the ambient temperature.

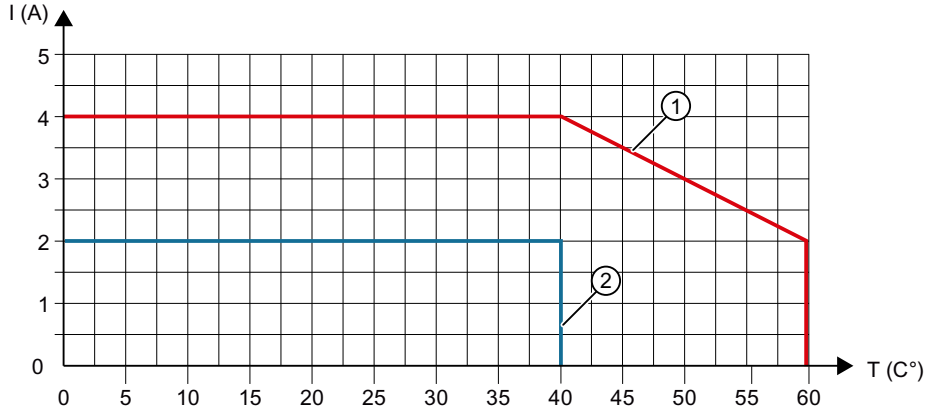

① Horizontal mounting position

② Vertical mounting position

Figure 8-1 Loading capacity of the digital outputs per mounting position

The following trends shows the load rating of the digital outputs when technology functions are used in dependence on the ambient temperature.

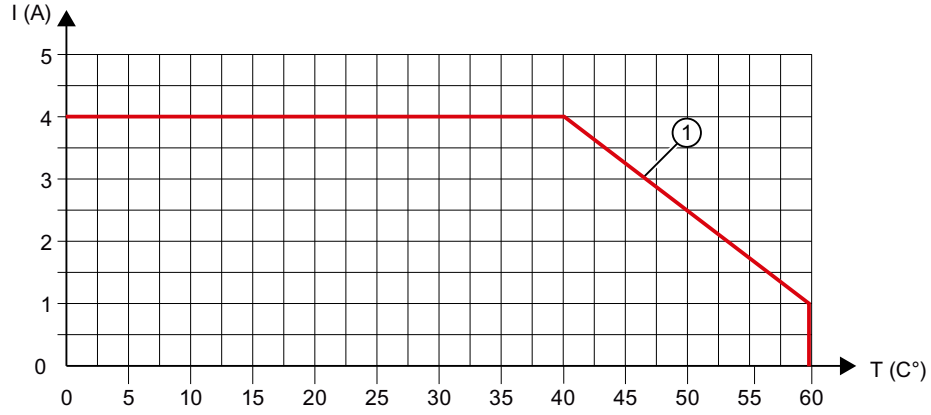

① Horizontal mounting position

Figure 8-2 Load rating of the digital outputs when technology functions are used

Power reduction (derating) to total current of digital inputs (per power supply)

The following figure shows the load rating of the current for encoder supplies of digital inputs.

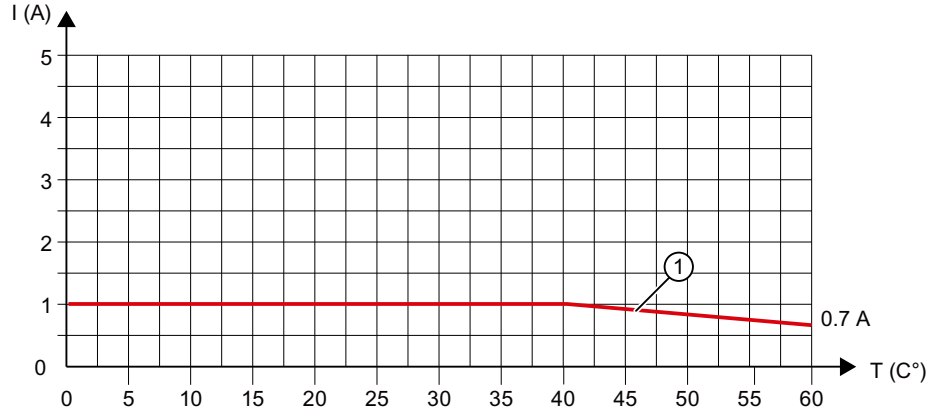

① Horizontal mounting position

Figure 8-3 Load rating of the current for encoder supplies of digital inputs

Simultaneity of digital inputs per group

If the maximum voltage at the inputs is 24 V, all the digital inputs may be simultaneously at high level (corresponds to 100% of the digital inputs).

If the maximum voltage at the inputs is 30 V, only 12 digital inputs of 16 digital inputs of one group may be simultaneously at high level (corresponds to 75% of the digital inputs).

General technical specifications

For information on the general technical specifications, such as standards and approvals, electromagnetic compatibility, protection class, etc., refer to the S7-1500, ET 200MP System Manual (http://support.automation.siemens.com/WW/view/en/59191792).

Dimension drawings

A

This appendix contains the dimension drawings of the compact CPU installed on a mounting rail. You must take the dimensions into consideration for installation in cabinets, control rooms, etc.

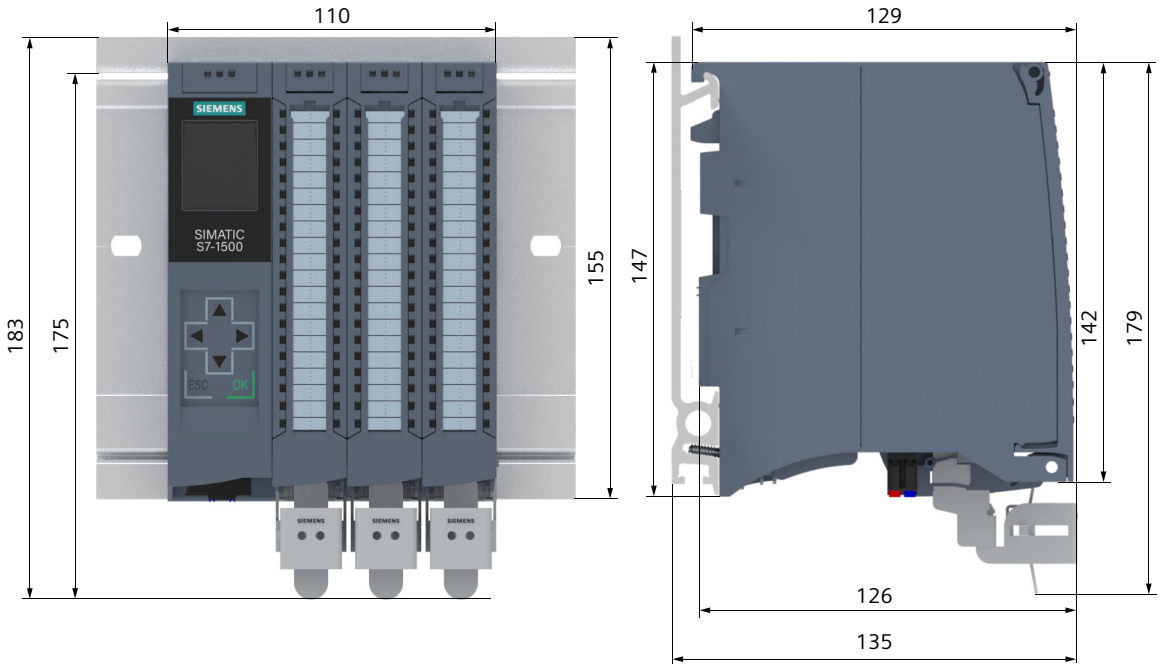

Figure A-1 Dimension drawing of CPU 1512C-1 PN – front and side views

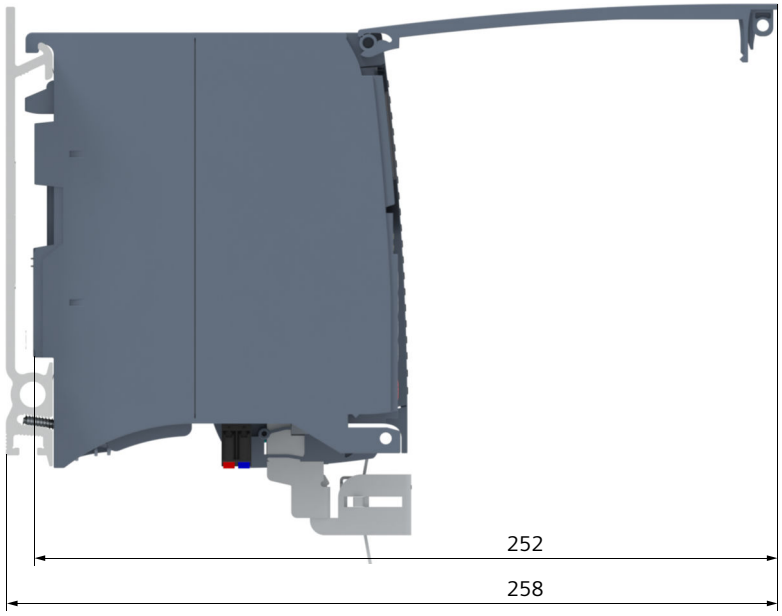

Figure A-2 Dimension drawing of CPU 1512C-1 PN – side view with front panel open

Parameter data records

B

B.1 Parameter assignment and structure of the parameter data records of the analog on-board I/O

Parameter assignment in the user program

You have the option of reassigning parameters for the analog on-board I/O in RUN (for example, measuring ranges of individual channels can be modified in RUN without affecting the other channels).

Changing parameters in RUN

The parameters are transferred to the analog on-board I/O via data records with the WRREC instruction. The parameters set with STEP 7 (TIA Portal) are not changed in the CPU, which means the parameters set in STEP 7 (TIA Portal) will be valid again after a restart.

The parameters are checked for plausibility by the analog on-board I/O only after the transfer.

Output parameter STATUS

If errors occur when transferring parameters with the "WRREC" instruction, the analog on-board I/O continues operation with the previous parameter assignment. However, a corresponding error code is written to the STATUS output parameter.

You will find a description of the "WRREC" instruction and the error codes in the STEP 7 (TIA Portal) online help.

B.2 Structure of a data record for input channels of the analog on-board I/O

Assignment of data record and channel

The parameters for the 5 analog input channels are located in data records 0 to 4 and are assigned as follows:

- Data record 0 for channel 0
- Data record 1 for channel 1
- Data record 2 for channel 2
- Data record 3 for channel 3
- Data record 4 for channel 4

Data record structure

The example in the figure below shows the structure of data record 0 for channel 0. The structure is identical for channels 1 to 4. The values in byte 0 and byte 1 are fixed and must not be changed.
You enable a parameter by setting the corresponding bit to "1".

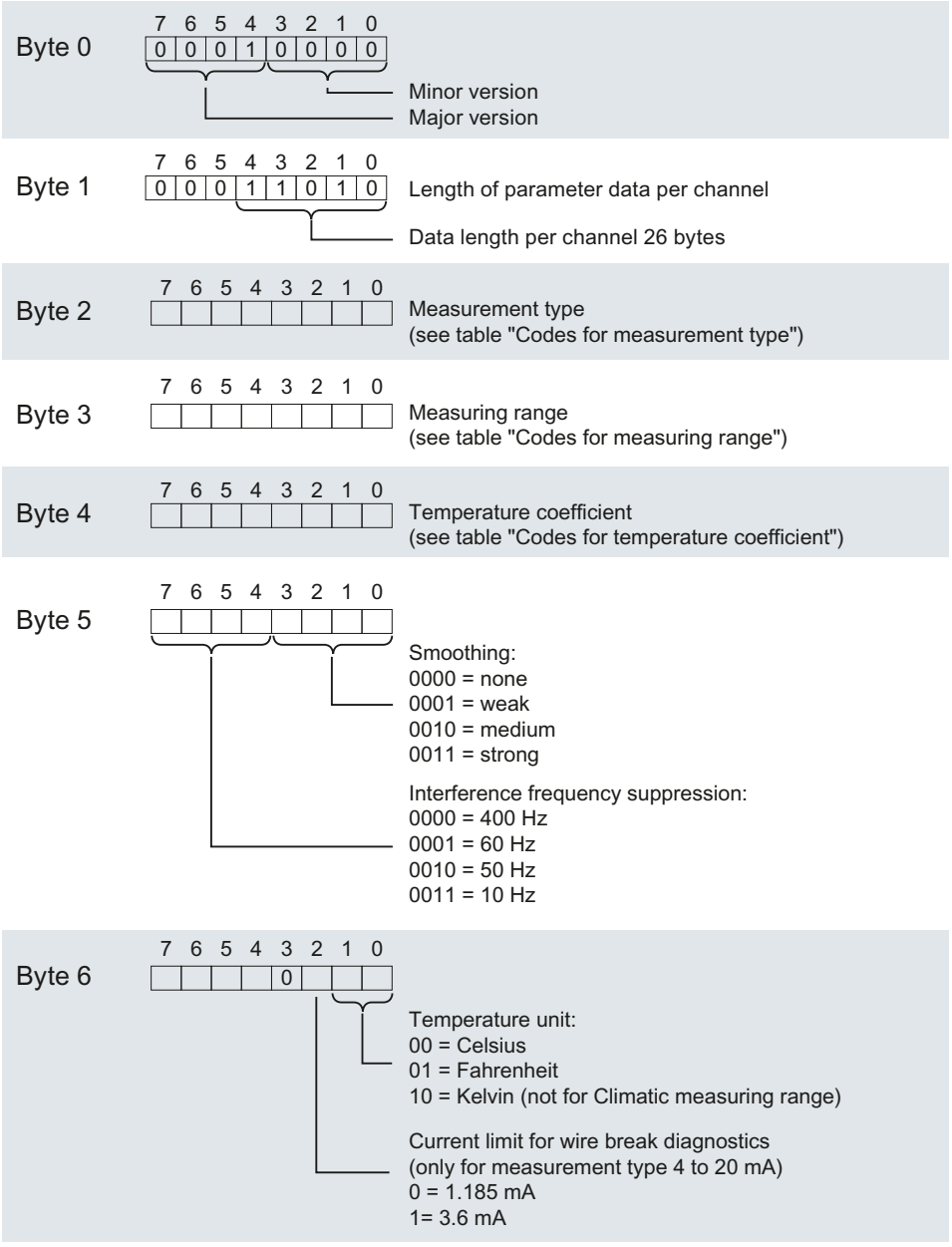

Figure B-1 Structure of data record 0: Bytes 0 to 6

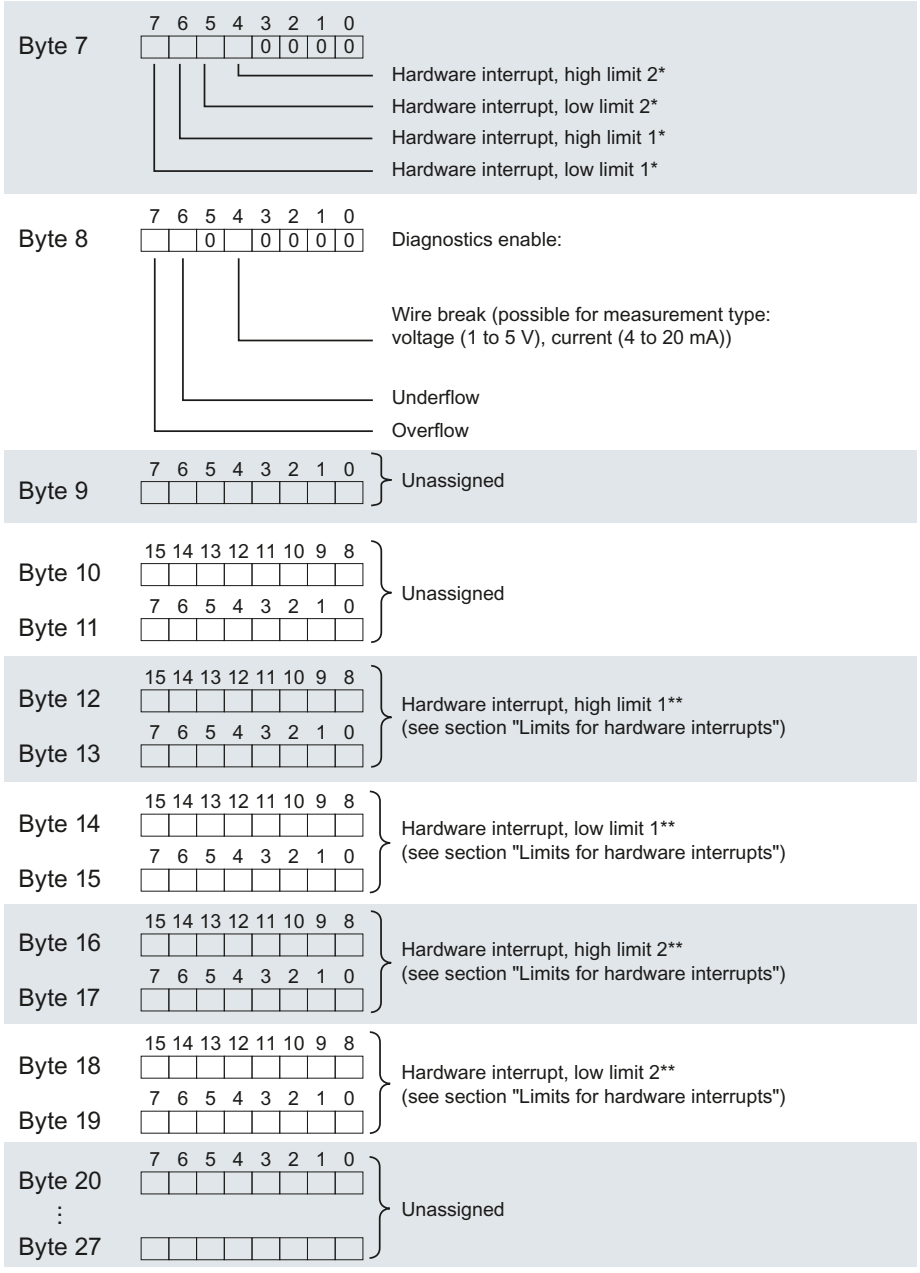

* Hardware interrupts may only be enabled via a data record if a hardware interrupt OB is assigned to the channel in STEP 7

** High limit must be greater than low limit

Figure B-2 Structure of data record 0: Bytes 7 to 27

Codes for measurement types

The following table contains all measurement types of the inputs of the analog on-board I/O with the corresponding codes. You must enter these codes in byte 2 of the data record for the corresponding channel (refer to the figure Structure of data record 0: Bytes 0 to 6).

Table B-1 Codes for measurement type

Measurement type	Code
Deactivated	0000 0000
Voltage (valid for channels 0 to 3)	0000 0001
Current, 4-wire measuring transducer (valid for channels 0 to 3)	0000 0010
Resistance (valid for channel 4)	0000 0100
Thermal resistor linear (valid for channel 4)	0000 0111

Codes for measuring ranges

The following table contains all measuring ranges of the inputs of the analog on-board I/O with the corresponding codes. You must enter these codes in each case in byte 3 of the data record for the corresponding channel (refer to the figure Structure of data record 0: Bytes 0 to 6).

Table B-2 Codes for measuring range

Measuring range	Code
Voltage	
±5 V	0000 1000
±10 V	0000 1001
1 to 5 V	0000 1010
0 to 10 V	0000 1011
Current, 4-wire measuring transducer	
0 to 20 mA	0000 0010
4 to 20 mA	0000 0011
±20 mA	0000 0100
Resistance	
150 Ω	0000 0001
300 Ω	0000 0010
600 Ω	0000 0011
Thermal resistor	
Pt 100 Climate	0000 0000
Ni 100 Climate	0000 0001
Pt 100 Standard	0000 0010
Ni 100 Standard	0000 0011

Codes for temperature coefficient

The following table lists all temperature coefficients for temperature measurement of the thermal resistors along with their codes. You must enter these codes in each case in byte 4 of the data record for the corresponding channel (refer to the figure Structure of data record 0: Bytes 0 to 6)

Table B-3 Codes for temperature coefficient

Temperature coefficient	Code
Pt xxx	
0.003851	0000 0000
0.003916	0000 0001
0.003902	0000 0010
0.003920	0000 0011
Ni xxx	
0.006180	0000 1000
0.006720	0000 1001

Hardware interrupt limits

The values that can be set for hardware interrupts (high/low limit) must be within the nominal range and overrange/underrange of the relevant measuring range.
The following tables list the permitted hardware interrupt limits. The limits depend on the selected measurement type and measuring range.

Table B-4 Voltage limits

Voltage		
±5 V, ±10 V	1 to 5 V, 0 to 10 V	
32510	32510	High limit
-32511	-4863	Low limit

Table B-5 Current and resistance limits

Current		Resistance	
±20 mA	4 to 20 mA / 0 to 20 mA	(all configurable measuring ranges)	
32510	32510	32510	High limit
-32511	-4863	1	Low limit

Table B-6 Limits for thermal resistor Pt 100 Standard and Pt 100 Climate

Thermal resistor						
Pt 100 Standard			Pt 100 Climate			
°C	°F	K	°C	°F	K	
9999	18319	12731	15499	31099	---	High limit
-2429	-4053	303	-14499	-22899	---	Low limit

Table B-7 Limits for thermal resistor Ni 100 Standard and Ni 100 Climate

Thermal resistor						
Ni 100 Standard			Ni 100 Climate			
°C	°F	K	°C	°F	K	
2949	5629	5681	15499	31099	---	High limit
-1049	-1569	1683	-10499	-15699	---	Low limit

B.3 Structure of a data record for output channels of the analog on-board I/O

Assignment of data record and channel

The parameters for the 2 analog output channels are located in data records 64 and 65 and are assigned as follows:

- Data record 64 for channel 0
- Data record 65 for channel 1

Data record structure

The figure below shows the structure of data record 64 for channel 0 as an example. The structure is identical for channel 1. The values in byte 0 and byte 1 are fixed and must not be changed.

You enable a parameter by setting the corresponding bit to "1".

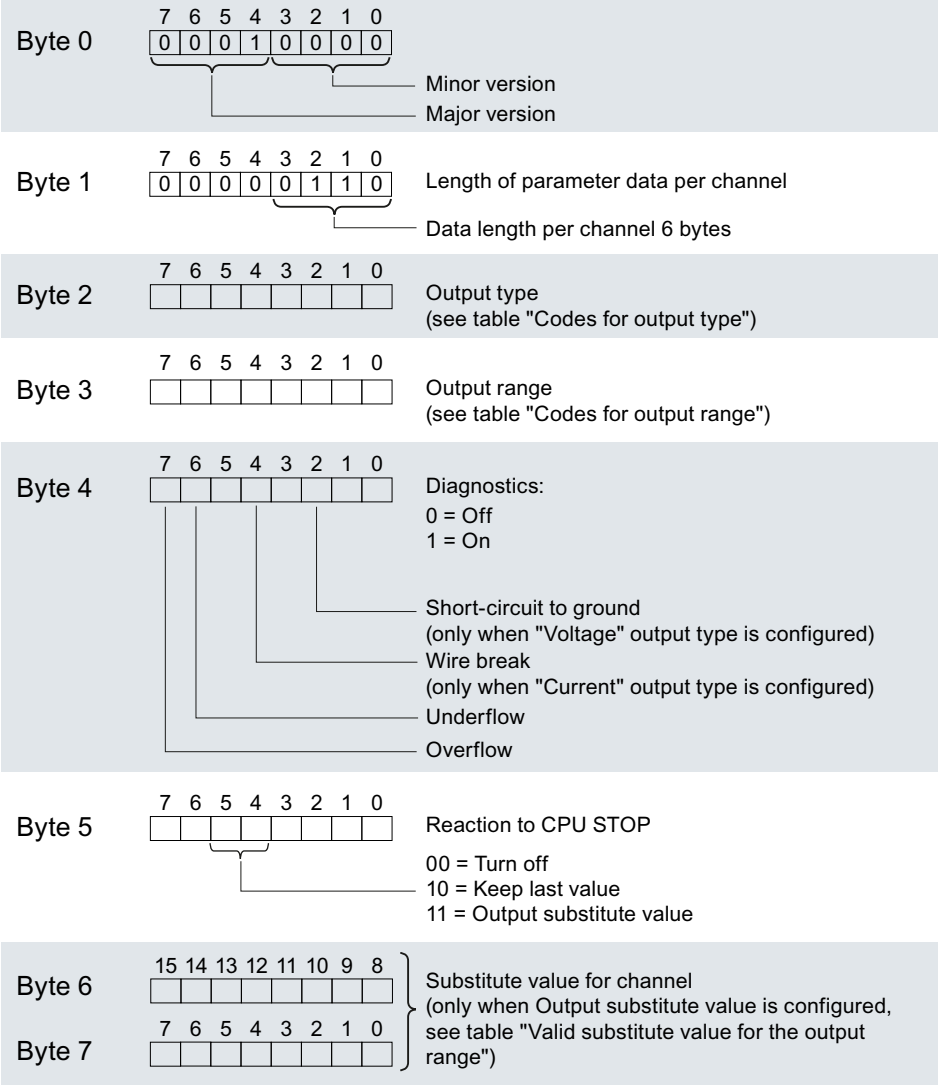

Figure B-3 Structure of data record 64: Bytes 0 to 7

Codes for output type

The following table contains all output types of the outputs of the analog on-board I/O with the corresponding codes. You must enter these codes in each case in byte 2 of the data record for the corresponding channel (see the previous figure).

Table B-8 Codes for the output type

Output type	Code
Disabled	0000 0000
Voltage	0000 0001
Current	0000 0010

Codes for output ranges

The following table contains all output ranges for voltage and current of the outputs of the analog on-board I/O with the corresponding codes. You must enter these codes in each case in byte 3 of the corresponding data record (see previous figure).

Table B-9 Codes for output range

Output range for voltage	Code
1 to 5 V 0 to 10 V ±10 V	0000 0011 0000 0010 0000 0000
Output range for current	**Code**
0 to 20 mA 4 to 20 mA ±20 mA	0000 0001 0000 0010 0000 0000

Permitted substitute values

The following table lists all output ranges for the permitted substitute values. You must enter these substitute values in each case in bytes 6 and 7 of the data record for the corresponding channel (see the previous figure). You can find the binary representation of the output ranges in the section Representation of output ranges (Page 193).

Table B-10 Permitted substitute value for the output range

Output range	Permitted substitute value
±10 V 1 to 5 V 0 to 10 V	-32512 ... +32511 -6912 ... +32511 0 ... +32511
±20 mA 4 to 20 mA 0 to 20 mA	-32512 ... +32511 -6912 ... +32511 0 ... +32511

B.4 Parameter assignment and structure of the parameter data records of the digital on-board I/O

Parameter assignment in the user program

You have the option of reassigning parameters for the digital on-board I/O in RUN (for example, values for input delay of individual channels can be modified in RUN without affecting the other channels).

Changing parameters in RUN

The parameters are transferred to the digital on-board I/O via data records 0 to 15 with the WRREC instruction. The parameters set with STEP 7 (TIA Portal) are not changed in the CPU, which means the parameters set in STEP 7 (TIA Portal) will be valid again after a restart.
The parameters are only checked for plausibility after the transfer.

Output parameter STATUS

If errors occur when transferring parameters with the "WRREC" instruction, the digital on-board I/O continues operation with the previous parameter assignment. However, a corresponding error code is written to the STATUS output parameter.
You will find a description of the "WRREC" instruction and the error codes in the STEP 7 (TIA Portal) online help.

B.5 Structure of a data record for input channels of the digital on-board I/O

Assignment of data record and channel

The parameters per submodule for the 32 digital input channels are located in data records 0 to 15 and are assigned as follows:
First submodule (X11):

- Data record 0 for channel 0
- Data record 1 for channel 1
- ...
- Data record 14 for channel 14
- Data record 15 for channel 15

Second submodule (X12):

- Data record 0 for channel 0
- Data record 1 for channel 1
- ...
- Data record 14 for channel 14
- Data record 15 for channel 15

Data record structure

The example in the figure below shows the structure of data record 0 for channel 0. The structure is identical for channels 1 to 31. The values in byte 0 and byte 1 are fixed and must not be changed.

You enable a parameter by setting the corresponding bit to "1".

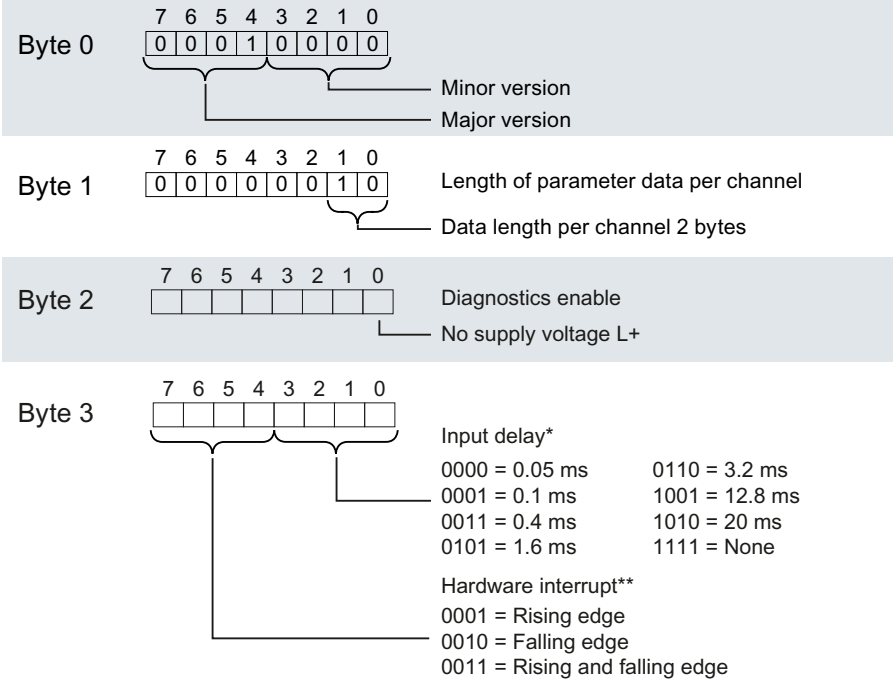

* 0.05 ms in isochronous mode (cannot be changed)

** Hardware interrupts can only be enabled via a data record if a hardware interrupt OB is assigned to the channel in STEP 7

Figure B-4 Structure of data record 0: Bytes 0 to 3

B.6 Structure of a data record for output channels of the digital on-board I/O

Assignment of data record and channel

The parameters per submodule for the 32 digital output channels are located in data records 64 to 79 and are assigned as follows:

First submodule (X11):

- Data record 64 for channel 0
- Data record 65 for channel 1
- ...
- Data record 78 for channel 14
- Data record 79 for channel 15

Second submodule (X12):

- Data record 64 for channel 0
- Data record 65 for channel 1
- ...
- Data record 78 for channel 14
- Data record 79 for channel 15

Data record structure

The example in the figure below shows the structure of data record 64 for channel 0. The structure is identical for channels 1 to 31. The values in byte 0 and byte 1 are fixed and must not be changed.
You enable a parameter by setting the corresponding bit to "1".

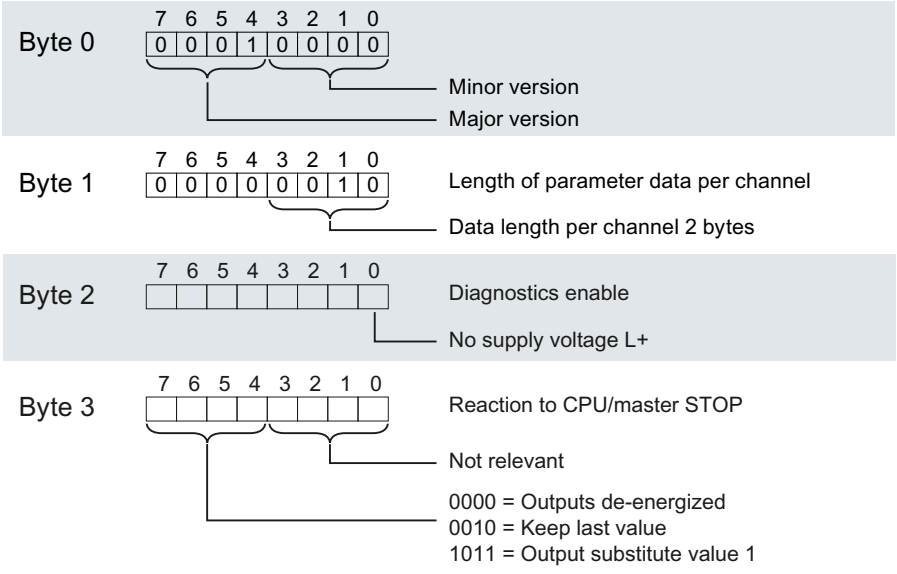

Figure B-5 Structure of data record 64: Bytes 0 to 3

B.7 Parameter data records of the high-speed counters

You can change the parameters of the High Speed Counter in RUN mode. The WRREC instruction is used to transfer the parameters to the High Speed Counter using data record 128.

If errors occur when transferring or validating parameters with the WRREC instruction, the High Speed Counter continues operation with the previous parameter assignment. The STATUS output parameter then contains a corresponding error code. If no error has occurred, the length of the data actually transferred is entered in the STATUS output parameter.

You will find a description of the "WRREC" instruction and the error codes in the STEP 7 (TIA Portal) online help.

Data record structure

The following table shows you the structure of data record 128 with the counter channel. The values in byte 0 to byte 3 are fixed and must not be changed. The value in byte 4 may only be changed by parameter reassignment and not in RUN mode.

Table B-11 Parameter data record 128 - HSC parameter header

Bit → / Byte	7	6	5	4	3	2	1	0
0	Major Version = 1				Minor Version = 0			
1	Length of parameter data of the channel = 48							
2	Reserved = 0 [1]							
3								

[1] Reserved bits must be set to 0

Table B-12 Parameter data record 128 - operating mode

Bit → / Byte	7	6	5	4	3	2	1	0
	Operating mode							
4	Reserved = 0 [1]				Operating mode:			
					0000_B: Deactivated			
					0001_B: Counting			
					0010_B: Measuring			
					0011 to 1111_B: Reserved			

[1] Reserved bits must be set to 0

Table B-13 Parameter data record 128 - Basic parameters

Bit → / Byte	7	6	5	4	3	2	1	0
	Basic parameters							
5	Reserved = 0 [1]					Enable additional diagnostic interrupts[2]	Reaction to CPU STOP:	
							00_B: Output substitute value	
							01_B: Keep last value	
							10_B: Continue operation	
							11_B: Reserved	

1) Reserved bits must be set to 0

2) Must be set to 1 for the activation of the diagnostic interrupts "Missing supply voltage L+, "Illegal A/B signal ratio" and "Hardware interrupt lost"

Table B-14 Parameter data record 128 - Counter inputs

Bit → / Byte	7	6	5	4	3	2	1	0
	Counter inputs							
6	Reserved = 0 [1]		Signal evaluation:		Signal type:			
			00_B: Single		0000_B: Pulse (A)			
			01_B: Double		0001_B: Pulse (A) and direction (B)			
			10_B: Quadruple		0010_B: Count up (A), count down (B)			
			11_B: Reserved		0011_B: Incremental encoder (A, B phase-shifted)			
					0100_B: Incremental encoder (A, B, N)			
					0101 to 1111_B: Reserved			
7	Reaction to signal N:		Invert direction	Reserved = 0 [1]	Filter frequency			
	00_B: No reaction to signal N				0000_B: 100 Hz			
					0001_B: 200 Hz			
	01_B: Synchronization at signal N				0010_B: 500 Hz			
					0011_B: 1 kHz			
	10_B: Capture at signal N				0100_B: 2 kHz			
	11_B: Reserved				0101_B: 5 kHz			
					0110_B: 10 kHz			
					0111_B: 20 kHz			
					1000_B: 50 kHz			
					1001_B: 100 kHz			
					1010_B: Reserved			
					1011 to 1111_B: Reserved			

1) Reserved bits must be set to 0

Table B-15 Parameter data record 128 - Hardware interrupts

Bit → / Byte	7	6	5	4	3	2	1	0
	Hardware interrupts[1]							
8	Reserved = 0 [1]	Reserved = 0 [1]	Reserved = 0 [1]	Direction reversal	Underflow (low counting limit violated)	Overflow (high counting limit violated)	Gate stop	Gate start
9	Synchronization of the counter by an external signal	New capture value available	Reserved = 0 [1]	Zero crossing	Reserved = 0 [1]	Comparison event for DQ1 occurred	Reserved = 0 [1]	Comparison event for DQ0 occurred

[1] Reserved bits must be set to 0

Table B-16 Parameter data record 128 - Behavior DQ0/1

Bit → / Byte	7	6	5	4	3	2	1	0
	Behavior of DQ0/1							
10	Set output (DQ1):				Set output (DQ0):			
	0000_B: Use by user program				0000_B: Use by user program			
	0001_B: Counting: Between comparison value 1 and high limit; Measuring: Measured value >= Comparison value 1				0001_B: Counting: Between comparison value 0 and high limit; Measuring: Measured value >= Comparison value 0			
	0010_B: Counting: Between comparison value 1 and low limit; Measuring: Measured value <= Comparison value 1				0010_B: Counting: Between comparison value 0 and low limit; Measuring: Measured value <= Comparison value 0			
	0011_B: Counting: At comparison value 1 for one pulse duration; Measuring: Reserved				0011_B: Counting: At comparison value 0 for one pulse duration; Measuring: Reserved			
	0100_B: Between comparison value 0 and 1				0100_B: Reserved			
	0101_B: Counting: After set command from CPU until comparison value 1; Measuring: Reserved				0101_B: Counting: After set command from CPU until comparison value 0; Measuring: Reserved			
	0110_B: Counting: Reserved Measuring: Not between comparison value 0 and 1				0110 to 1111_B: Reserved			
	0111 to 1111_B: Reserved							
11	Count direction (DQ1):		Count direction (DQ0):		Reserved = 0 [1]		Substitute value for DQ1	Substitute value for DQ0
	00_B: Reserved		00_B: Reserved					
	01_B: Up		01_B: Up					
	10_B: Down		10_B: Down					
	11_B: In both directions		11_B: In both directions					

[1] Reserved bits must be set to 0

Bit → / Byte	7	6	5	4	3	2	1	0
12	Pulse duration (DQ0): WORD: Value range in ms/10: 0 to 65535_D							
13								
14	Pulse duration (DQ1): WORD: Value range in ms/10: 0 to 65535_D							
15								

1) Reserved bits must be set to 0

Table B-17 Parameter data record 128 - Behavior DI0

Bit → / Byte	7	6	5	4	3	2	1	0
	Behavior of DI0							
16	Behavior of count value after Capture (DI0):	Edge selection (DI0):		Level selection (DI0):	Reserved = 0 1)	Set function of the DI (DI0):		
		00_B: Reserved				000_B: Gate start/stop (level-triggered)		
		01_B: On a rising edge		0_B: Active at high level		001_B: Gate start (edge-triggered)		
		10_B: On a falling edge				010_B: Gate stop (edge-triggered)		
	0_B: Continue counting	11_B: On rising and falling edge		1_B: Active at low level		011_B: Synchronization		
						100_B: Enable synchronization at signal N		
	1_B: Set to start value and continue counting					101_B: Capture		
						110_B: Digital input without function		
						111_B: Reserved		

1) Reserved bits must be set to 0

Table B-18 Parameter data record 128 - Behavior DI1

Bit → / Byte	7	6	5	4	3	2	1	0
17	**Behavior of DI1**: See byte 16							
18	Reserved = 0 1)							
19	Sync option	Reserved = 0 1)			Reserved = 0 1)			
	0_B: Once							
	1_B: Periodically							

1) Reserved bits must be set to 0

Table B-19 Parameter data record 128 - Behavior DI1

Bit → / Byte	7	6	5	4	3	2	1	0
	Values							
20-23	High counting limit: DWORD: Value range: –2147483648 to 2147483647_D or 80000000 to $7FFFFFFF_H$							

Bit → / Byte	7	6	5	4	3	2	1	0
24-27	Comparison value 0: Counting mode: DWORD Value range: –2147483648 to 2147483647_D or 80000000 to $7FFFFFFF_H$; Measuring mode: REAL Floating-point number in the set unit of the measured variable							
28-31	Comparison value 1: Counting mode: DWORD Value range: –2147483648 to 2147483647_D: or 80000000 to $7FFFFFFF_H$; Measuring mode: REAL Floating-point number in the set unit of the measured variable							
32-35	Start value: DWORD: Value range: –2147483648 to 2147483647_D or 80000000 to $7FFFFFFF_H$							
36-39	Low counting limit: DWORD: Value range: –2147483648 to 2147483647_D or 80000000 to $7FFFFFFF_H$							
40-43	Update time: DWORD: Value range in µs: 0 to 25000000_D							

Table B-20 Parameter data record 128 - Counter behavior at limits and at gate start

Bit → / Byte	7	6	5	4	3	2	1	0
	Counter behavior at limits and at gate start							
44	Response to gate start:		Response to counting limit violation:			Reset at counting limit violation:		
	00_B: Set to start value		000_B: Stop counting			000_B: To other counting limit		
	01_B: Continue with current value		001_B: Continue counting			001_B: On start value		
	10 to 11_B: Reserved		010 to 111_B: Reserved			010 to 111_B: Reserved		

Table B-21 Parameter data record 128 - Specify measured value

Bit → / Byte	7	6	5	4	3	2	1	0
	Specify measured value							
45	Reserved = 0 [1]			Time base for velocity measurement:			Measured variable:	
				000_B: 1 ms			00_B: Frequency	
				001_B: 10 ms			01_B: Period duration	
				010_B: 100 ms			10_B: Velocity	
				011_B: 1 s			11_B: Reserved	
				100_B: 60 s/1 min				
				101 to 111_B: Reserved				
46	Increments per unit: WORD: Value range: 1 to 65535_D							
47								
48	Set hysteresis range: Value range: 0 to 255_D							

[1] Reserved bits must be set to 0

Bit → / Byte	7	6	5	4	3	2	1	0
49	Use of HSC DI0 0_B: Not used 1_B: Used	Reserved = 0 [1]		Selection HSC DI0 Value range (applicable if the CPU is configured with deactivated 'Front connector assignment like 1511C' setting): HSC1..3: 01000_B: Front connector X11, terminal 11 (DI8) 01001_B: Front connector X11, terminal 12 (DI9) 01010_B: Front connector X11, terminal 13 (DI10) 01011_B: Front connector X11, terminal 14 (DI11) 01100_B: Front connector X11, terminal 15 (DI12) 01101_B: Front connector X11, terminal 16 (DI13) 01110_B: Front connector X11, terminal 17 (DI14) 01111_B: Front connector X11, terminal 18 (DI15) HSC4..6: 11000_B: Front connector X12, terminal 11 (DI8) 11001_B: Front connector X12, terminal 12 (DI9) 11010_B: Front connector X12, terminal 13 (DI10) 11011_B: Front connector X12, terminal 14 (DI11) 11100_B: Front connector X12, terminal 15 (DI12) 11101_B: Front connector X12, terminal 16 (DI13) 11110_B: Front connector X12, terminal 17 (DI14) 11111_B: Front connector X12, terminal 18 (DI15) All other values: Reserved Note: If the CPU with enabled 'Front connector assignment like 1511C' setting is configured, the parameter data record definition of CPU 1511C applies. See device manual of CPU 1511C.				
50	Use of HSC DI1 0_B: Not used 1_B: Used	Reserved = 0 [1]		Selection HSC DI1 Value range (applicable if the CPU is configured with deactivated 'Front connector assignment like 1511C' setting): HSC1..3: 01000_B: Front connector X11, terminal 11 (DI8) 01001_B: Front connector X11, terminal 12 (DI9) 01010_B: Front connector X11, terminal 13 (DI10) 01011_B: Front connector X11, terminal 14 (DI11) 01100_B: Front connector X11, terminal 15 (DI12) 01101_B: Front connector X11, terminal 16 (DI13) 01110_B: Front connector X11, terminal 17 (DI14) 01111_B: Front connector X11, terminal 18 (DI15) HSC4..6: 11000_B: Front connector X12, terminal 11 (DI8) 11001_B: Front connector X12, terminal 12 (DI9) 11010_B: Front connector X12, terminal 13 (DI10) 11011_B: Front connector X12, terminal 14 (DI11) 11100_B: Front connector X12, terminal 15 (DI12) 11101_B: Front connector X12, terminal 16 (DI13) 11110_B: Front connector X12, terminal 17 (DI14) 11111_B: Front connector X12, terminal 18 (DI15) All other values: Reserved Note: If the CPU with enabled 'Front connector assignment like 1511C' setting is configured, the parameter data record definition of CPU 1511C applies. See device manual of CPU 1511C.				

[1] Reserved bits must be set to 0

Bit → / Byte	7	6	5	4	3	2	1	0
51	Use of HSC DQ1 0_B: Not used 1_B: Used	Reserved = 0 [1]		Selection HSC DQ1 Value range: HSC1: 00001_B: Front connector X11, terminal 22 (DQ1) 01001_B: Front connector X11, terminal 32 (DQ9) HSC2: 00011_B: Front connector X11, terminal 24 (DQ3) 01011_B: Front connector X11, terminal 34 (DQ11) HSC3: 00100_B: Front connector X11, terminal 25 (DQ4) 01100_B: Front connector X11, terminal 35 (DQ12) HSC4: 00101_B: Front connector X11, terminal 26 (DQ5) 01101_B: Front connector X11, terminal 36 (DQ13) HSC5: 00111_B: Front connector X11, terminal 28 (DQ7) 01111_B: Front connector X11, terminal 38 (DQ15) HSC6: 00110_B: Front connector X11, terminal 27 (DQ6) 01110_B: Front connector X11, terminal 37 (DQ14) All other values: Reserved				

[1] Reserved bits must be set to 0

B.8 Parameter data records (PWM)

You have the option of reassigning the pulse width modulation parameters in RUN. The parameters are transferred with the instruction WRREC via the data record 128 to the PWM submodule.

If errors occur when transferring or validating parameters with the WRREC instruction, the module continues operation with the previous parameter assignment. The output parameter STATUS then contains a corresponding error code. If no error has occurred, the length of the data actually transferred is entered in the output parameter STATUS.

You can find a description of the "WRREC" instruction and the error codes in the STEP 7 (TIA Portal) online help.

Data record structure

The following table shows the structure of the data record 128 for the pulse width modulation. The values in byte 0 to byte 3 are fixed and must not be changed.

Table B-22 Parameter data record 128

Bit → / Byte	7	6	5	4	3	2	1	0
0	Major Version = 1				Minor Version = 0			
1	Length of the parameter data of the channel in bytes = 12							
2	Reserved = 0 [1]							
3								

[1] Reserved bits must be set to 0

Bit → / Byte	7	6	5	4	3	2	1	0
4	Current control	Dithering	High-speed output		Operating mode			
	0_B: Deactivated	0_B: Deactivated	0_B: Deactivated		0000_B: Reserved			
	1_B: Reserved	1_B: Reserved	01_B: Activated		0001_B: PWM (pulse-width modulation)			
			10_B-11_B: Reserved		0010_B: Reserved			
					0011_B: Reserved			
					0100_B: Frequency output			
					0110_B to 1110_B: Reserved			
					1111_B: Deactivated			
5	Reserved = 0 [1]			Reserved = 0 [1]		Diagnostics interrupt	Reaction to CPU STOP	
						0_B: Deactivated	00_B: DQ substitute value	
						1_B: Activated	01_B: Reserved	
							10_B: Operating mode for continuation of operation	
							11_B: Reserved	
6	Reserved = 0 [1]			Pulse output (DQA) selection Range of values for PWM1: 00000_B: Front connector X11, terminal 21 (DQ0) 01000_B: Front connector X11, terminal 31 (DQ8) Range of values for PWM2: 00010_B: Front connector X11, terminal 23 (DQ2) 01010_B: Front connector X11, terminal 33 (DQ10) Range of values for PWM3: 00100_B: Front connector X11, terminal 25 (DQ4) 01100_B: Front connector X11, terminal 35 (DQ12) Range of values for PWM4: 00110_B: Front connector X11, terminal 27 (DQ6) 01110_B: Front connector X11, terminal 37 (DQ14) All other values: Reserved			
7	Reserved = 0 [1]		Output format		Reserved = 0 [1]	Reserved = 0 [1]	Reserved = 0 [1]	Substitute value DQA
			PWM	Frequency output				0_B: 0 V
			00_B: S7 analog format	00_B: Reserved				1_B: 24 V
			01_B: per 100 (%)	01_B: 1 Hz				
			10_B: per 1000	10_B: Reserved				
			11_B: per 10,000	11_B: Reserved				
8-11	DWORD minimum pulse duration							

[1] Reserved bits must be set to 0

Bit → / Byte	7	6	5	4	3	2	1	0
8-11	PWM: Minimum pulse duration (default = 0 µs)							
	Frequency output: Reserved							
12-15	DWORD period duration							
	PWM: Period duration Supported value range depending on configured values for "Pulse output (DQA)" and "High-speed output (0.1 A)" • for 100 kHz DQ (high-speed output activated): 10 µs to 10 000 000 µs (10 s) • for 10 kHz DQ (high-speed output deactivated): 100 µs to 10 000 000 µs (10 s) • for 100 Hz DQ (high-speed output deactivated): 10 000 µs (10 ms) to 10 000 000 µs (10 s) Default = 2 000 000 µs (2 s)							
	Frequency output: Reserved							

1) Reserved bits must be set to 0

Analog value processing

C

C.1 Conversion method

Conversion

An integrated analog-to-digital converter converts the analog signal into a digital signal in order that the compact CPU can process the analog signal read in by an analog channel. Once the CPU has processed the digital signal, an integrated digital-to-analog converter converts the output signal into an analog current or voltage value.

Interference frequency suppression

The interference frequency suppression of the analog inputs suppresses the interference caused by the frequency of the AC voltage network used. The frequency of the AC voltage network may interfere with measured values, particularly for measurements within narrow voltage ranges.

You set the line frequency with which the plant operates (400, 60, 50 or 10 Hz) using the "Interference frequency suppression" parameter in STEP 7 (TIA Portal). The "Interference frequency suppression" parameter can only be set module-wide (for all input channels). The interference frequency suppression filters out the set interference frequency (400/60/50/10 Hz) as well as multiples of it. The selected interference frequency suppression also defines the integration time. The conversion time changes depending on the set interference frequency suppression.

For example, an interference frequency suppression of 50 Hz corresponds to an integration time of 20 ms. The analog on-board I/O supplies one measured value to the CPU every millisecond over a period of 20 ms. This measured value corresponds to the floating mean value of the last 20 measurements.

The following figure shows how this works using a 400 Hz interference frequency suppression as an example. A 400 Hz interference frequency suppression corresponds to an integration time of 2.5 ms. The analog on-board I/O supplies a measured value to the CPU every 1.25 milliseconds within the integration time.

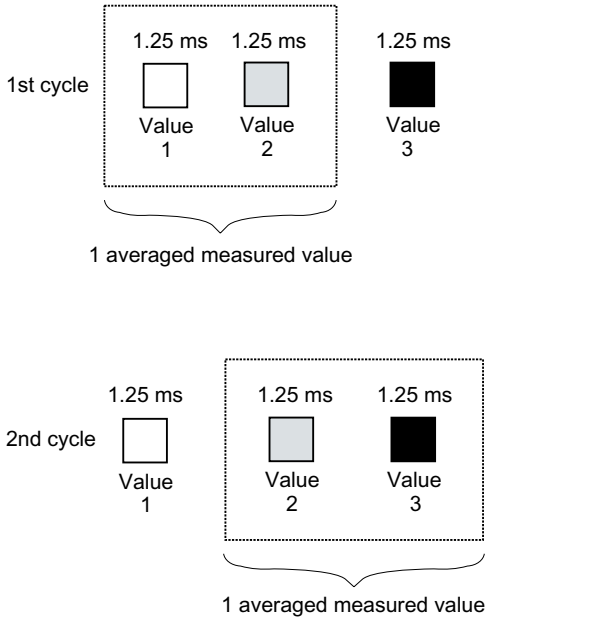

Figure C-1 Interference frequency suppression 400 Hz

The following figure shows how this works using a 60 Hz interference frequency suppression as an example. A 60 Hz interference frequency suppression corresponds to an integration time of 16.6 ms. The analog on-board I/O supplies a measured value to the CPU every 1.04 milliseconds within the integration time.

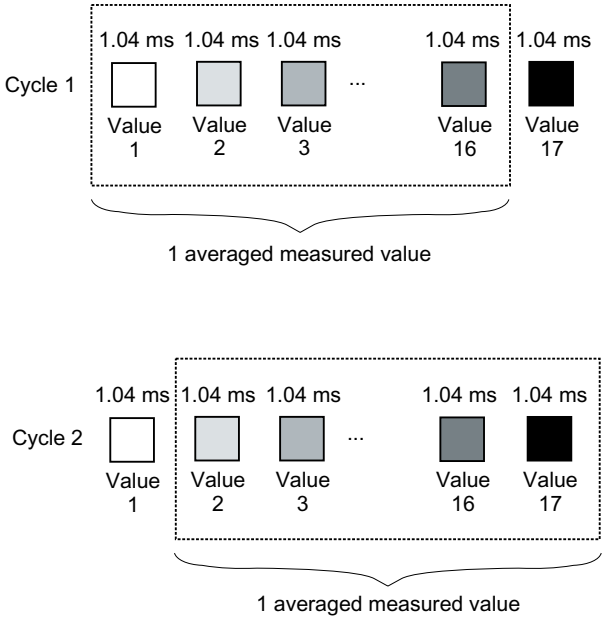

Figure C-2 Interference frequency suppression 60 Hz

The following figure shows how this works using a 50 Hz interference frequency suppression as an example. A 50 Hz interference frequency suppression corresponds to an integration time of 20 ms. The analog on-board I/O supplies a measured value to the CPU every millisecond within the integration time.

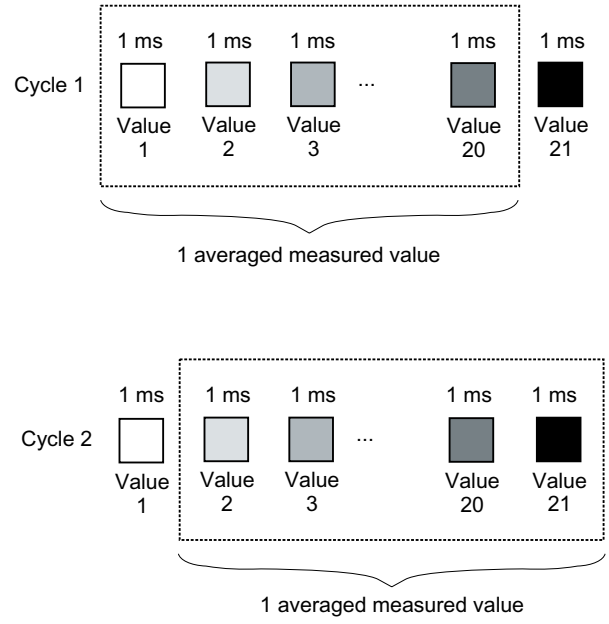

Figure C-3 Interference frequency suppression 50 Hz

The following figure shows how this works using a 10 Hz interference frequency suppression as an example. A 10 Hz interference frequency suppression corresponds to an integration time of 100 ms. The analog on-board I/O supplies a measured value to the CPU every millisecond within the integration time.

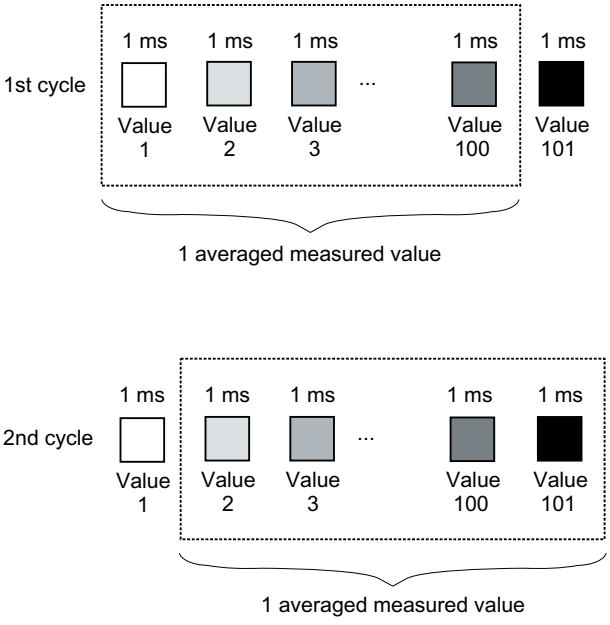

Figure C-4 Interference frequency suppression 10 Hz

The following table provides an overview of the configurable line frequencies, the integration time and the intervals within which measured values are supplied to the CPU.

Table C-1 Overview of the configurable line frequencies

Interference frequency suppression	Integration time	Interval
400 Hz	2.5 ms	2 x 1.25 ms
60 Hz	16.6 ms	16 x 1.04 ms
50 Hz	20 ms	20 x 1 ms
10 Hz	100 ms	100 x 1 ms

NOTE

Basic error with an integration time of 2.5 ms.

With an integration time of 2.5 ms, the measured value is changed by the following values based on the additionally obtained basic error and noise:

- with "voltage", "current" and "resistance" by ±0.1 %
- with "Thermal resistor Pt 100 Standard" by ±0.4 K
- with "Thermal resistor Pt 100 Climatic" by ±0.3 K
- with "Thermal resistor Ni 100 Standard" by ±0.2 K
- with "Thermal resistor Ni 100 Climatic" by ±0.1 K

A detailed description of the basic and operating error is available in the function manual Analog value processing (http://support.automation.siemens.com/WW/view/en/67989094).

Smoothing

The individual measured values are smoothed by filtering. The smoothing can be set in 4 levels and channel-selective in STEP 7 (TIA Portal).

Smoothing time = Smoothing (k) x configured integration time

The following figure shows the time it takes for the smoothed analog value to reach approximately 100 % depending on the set smoothing. This is valid for all signal changes at the analog input.

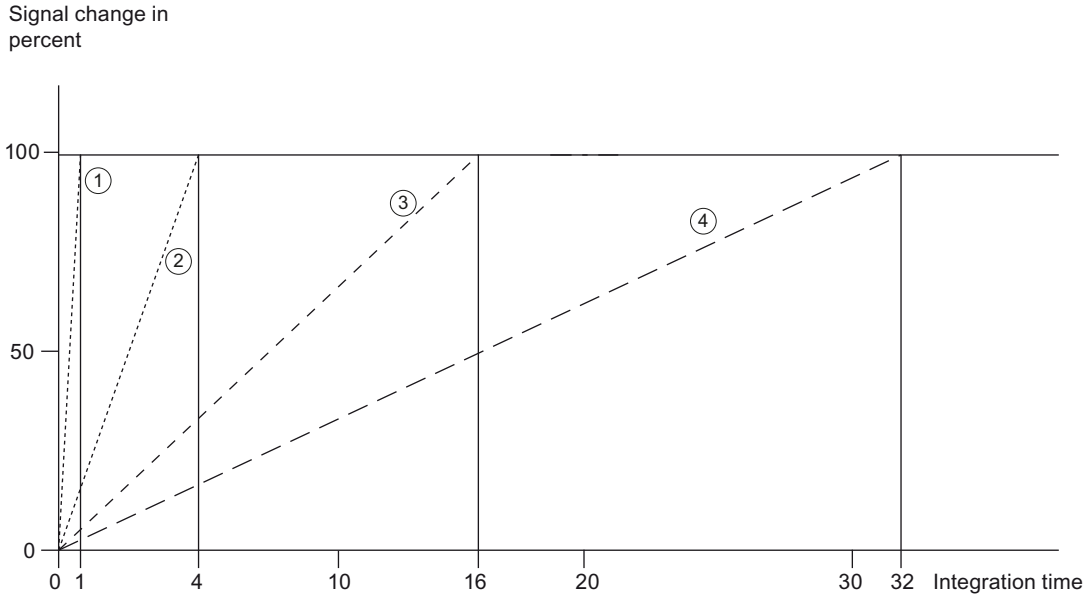

① None (smoothing = 1 x integration time)

② Weak (smoothing = 4 x integration time) *

③ Medium (smoothing = 16 x integration time) *

④ Strong (smoothing = 32 x integration time) *

* The smoothing time can increase by 1 x integration time.

Figure C-5 Smoothing time depending on the set smoothing level

The following table shows the time it takes for the smoothed analog value to reach approximately 100 % depending on the set smoothing and the set interference frequency suppression.

Table C-2 Smoothing time depending on the set smoothing level and interference frequency suppression

(mean value generation from scan values)Selection of the smoothing	**Interference frequency suppression/smoothing time**			
	400 Hz	**60 Hz**	**50 Hz**	**10 Hz**
None	2.5 ms	16.6 ms	20 ms	100 ms
Weak	10 ms	66.4 ms	80 ms	400 ms
Medium	40 ms	265.6 ms	320 ms	1600 ms
Strong	80 ms	531.2 ms	640 ms	3200 ms

Cycle time

The cycle times (1 ms, 1.04 ms and 1.25 ms) result from the configured interference frequency suppression. The cycle time is independent of the number of configured analog channels. The values for the analog input channels are detected sequentially in each cycle.

Reference

For more information on conversion time, cycle time and conversion method, refer to the Analog value processing (http://support.automation.siemens.com/WW/view/en/67989094) function manual.

C.2 Representation of analog values

Introduction

The analog values for all measuring ranges that you can use with the analog on-board I/O are represented in this appendix.
For cross-product information on "analog value processing", refer to the Analog value processing (http://support.automation.siemens.com/WW/view/en/67989094) function manual.

Measured value resolution

Each analog value is entered left aligned into the tags. The bits marked with "x" are set to "0".

NOTE

This resolution does not apply to temperature values. The digitalized temperature values are the result of a conversion in the analog on-board I/O.

Table C-3 Resolution of the analog values

Resolution in bits including sign	Values		Analog value	
	Decimal	Hexadecimal	High byte	Low byte
16	1	1_H	Sign 0 0 0 0 0 0 0	0 0 0 0 0 0 0 1

C.3 Representation of input ranges

The tables below set out the digitized representation of the input ranges separately for bipolar and unipolar input ranges. The resolution is 16 bits.

Table C-4 Bipolar input ranges

Dec. value	Measured value in %	Data word																Range
		2^{15}	2^{14}	2^{13}	2^{12}	2^{11}	2^{10}	2^{9}	2^{8}	2^{7}	2^{6}	2^{5}	2^{4}	2^{3}	2^{2}	2^{1}	2^{0}	
32767	>117.589	0	1	1	1	1	1	1	1	1	1	1	1	1	1	1	1	Overflow
32511	117.589	0	1	1	1	1	1	1	0	1	1	1	1	1	1	1	1	Overrange
27649	100.004	0	1	1	0	1	1	0	0	0	0	0	0	0	0	0	1	
27648	100.000	0	1	1	0	1	1	0	0	0	0	0	0	0	0	0	0	Nominal range
1	0.003617	0	0	0	0	0	0	0	0	0	0	0	0	0	0	0	1	
0	0.000	0	0	0	0	0	0	0	0	0	0	0	0	0	0	0	0	
-1	-0.003617	1	1	1	1	1	1	1	1	1	1	1	1	1	1	1	1	
-27648	-100.000	1	0	0	1	0	1	0	0	0	0	0	0	0	0	0	0	
-27649	-100.004	1	0	0	1	0	0	1	1	1	1	1	1	1	1	1	1	Underrange
-32512	-117.593	1	0	0	0	0	0	0	1	0	0	0	0	0	0	0	0	
-32768	<-117.593	1	0	0	0	0	0	0	0	0	0	0	0	0	0	0	0	Underflow

Table C-5 Unipolar input ranges

Dec. value	Measured value in %	Data word																Range
		2^{15}	2^{14}	2^{13}	2^{12}	2^{11}	2^{10}	2^{9}	2^{8}	2^{7}	2^{6}	2^{5}	2^{4}	2^{3}	2^{2}	2^{1}	2^{0}	
32767	>117.589	0	1	1	1	1	1	1	1	1	1	1	1	1	1	1	1	Overflow
32511	117.589	0	1	1	1	1	1	1	0	1	1	1	1	1	1	1	1	Overrange
27649	100.004	0	1	1	0	1	1	0	0	0	0	0	0	0	0	0	1	
27648	100.000	0	1	1	0	1	1	0	0	0	0	0	0	0	0	0	0	Nominal range
1	0.003617	0	0	0	0	0	0	0	0	0	0	0	0	0	0	0	1	
0	0.000	0	0	0	0	0	0	0	0	0	0	0	0	0	0	0	0	
-1	-0.003617	1	1	1	1	1	1	1	1	1	1	1	1	1	1	1	1	Underrange
-4864	-17.593	1	1	1	0	1	1	0	1	0	0	0	0	0	0	0	0	
-32768	<-17.593	1	0	0	0	0	0	0	0	0	0	0	0	0	0	0	0	Underflow

C.3.1 Representation of analog values in voltage measuring ranges

The following tables list the decimal and hexadecimal values (codes) of the possible voltage measuring ranges.

Table C-6 Voltage measuring ranges ±10 V, ±5 V

Values		Voltage measuring range		Range
dec.	**hex.**	**±10 V**	**±5 V**	
32767	7FFF	>11.759 V	>5.879 V	Overflow
32511	7EFF	11.759 V	5.879 V	Overrange
27649	6C01			
27648	6C00	10 V	5 V	Nominal range
20736	5100	7.5 V	3.75 V	
1	1	361.7 µV	180.8 µV	
0	0	0 V	0 V	
-1	FFFF			
-20736	AF00	-7.5 V	-3.75 V	
-27648	9400	-10 V	-5 V	
-27649	93FF			Underrange
-32512	8100	-11.759 V	-5.879 V	
-32768	8000	<-11.759 V	<-5.879 V	Underflow

Table C-7 Voltage measuring range 1 to 5 V, 0 to 10 V

Values		Voltage measuring range		Range
dec.	**hex.**	**1 to 5 V**	**0 to 10 V**	
32767	7FFF	>5.704 V	>11.759 V	Overflow
32511	7EFF	5.704 V	11.759 V	Overrange
27649	6C01			
27648	6C00	5 V	10.0 V	Nominal range
20736	5100	4 V	7.5 V	
1	1	1 V + 144.7 µV	361.7 µV	
0	0	1 V	0 V	
-1	FFFF			Underrange
-4864	ED00	0.296 V	-1.759 V	
-32768	8000	< 0.296 V	< -1.759 V	Underflow

C.3.2 Representation of analog values in current measuring ranges

The following tables list the decimal and hexadecimal values (codes) of the possible current measuring ranges.

Table C-8 Current measuring range ±20 mA

Values		**Current measuring range**	
dec.	**hex.**	**±20 mA**	
32767	7FFF	>23.52 mA	Overflow
32511	7EFF	23.52 mA	Overrange
27649	6C01		
27648	6C00	20 mA	Nominal range
20736	5100	15 mA	
1	1	723.4 nA	
0	0	0 mA	
-1	FFFF		
-20736	AF00	-15 mA	
-27648	9400	-20 mA	
-27649	93FF		Underrange
-32512	8100	-23.52 mA	
-32768	8000	<-23.52 mA	Underflow

Table C-9 Current measuring ranges 0 to 20 mA and 4 to 20 mA

Values		**Current measuring range**		
dec.	**hex.**	**0 to 20 mA**	**4 to 20 mA**	
32767	7FFF	>23.52 mA	>22.81 mA	Overflow
32511	7EFF	23.52 mA	22.81 mA	Overrange
27649	6C01			
27648	6C00	20 mA	20 mA	Nominal range
20736	5100	15 mA	16 mA	
1	1	723.4 nA	4 mA + 578.7 nA	
0	0	0 mA	4 mA	
-1	FFFF			Underrange
-4864	ED00	-3.52 mA	1.185 mA	
-32768	8000	<-3.52 mA	<1.185 mA	Underflow

C.3.3 Representation of the analog values of resistance-type sensors/resistance-type thermometers

The following tables list the decimal and hexadecimal values (codes) of the possible resistance-type sensor ranges.

Table C-10 Resistance-type sensors of 150 Ω, 300 Ω and 600 Ω

Values		Resistance-type sensor range			
dec.	**hex.**	**150 Ω**	**300 Ω**	**600 Ω**	
32767	7FFF	>176.38 Ω	>352.77 Ω	>705.53 Ω	Overflow
32511	7EFF	176.38 Ω	352.77 Ω	705.53 Ω	Overrange
27649	6C01				
27648	6C00	150 Ω	300 Ω	600 Ω	Nominal range
20736	5100	112.5 Ω	225 Ω	450 Ω	
1	1	5.43 mΩ	10.85 mΩ	21.70 mΩ	
0	0	0 Ω	0 Ω	0 Ω	

Table C-11 Resistance-type thermometer Pt 100 Standard

Pt 100 Standard in °C (1 digit = 0.1°C)	Values		Pt 100 Standard in °F (1 digit = 0.1 °F)	Values		Pt 100 Standard in K (1 digit = 0.1 K)	Values		Range
	dec.	**hex.**		**dec.**	**hex.**		**dec.**	**hex.**	
> 1000.0	32767	7FFF	> 1832.0	32767	7FFF	> 1273.2	32767	7FFF	Overflow
1000.0 : 850.1	10000 : 8501	2710 : 2135	1832.0 : 1562.1	18320 : 15621	4790 : 3D05	1273.2 : 1123.3	12732 : 11233	31BC : 2BE1	Overrange
850.0 : -200.0	8500 : -2000	2134 : F830	1562.0 : -328.0	15620 : -3280	3D04 : F330	1123.2 : 73.2	11232 : 732	2BE0 : 2DC	Nominal range
-200.1 : -243.0	-2001 : -2430	F82F : F682	-328.1 : -405.4	-3281 : -4054	F32F : F02A	73.1 : 30.2	731 : 302	2DB : 12E	Underrange
< -243.0	-32768	8000	< -405.4	-32768	8000	< 30.2	32768	8000	Underflow

Table C-12 Resistance-type thermometer Pt 100 Climate

Pt 100 Climate/ in °C (1 digit = 0.01 °C)	Values		Pt 100 Climate/ in °F (1 digit = 0.01 °F)	Values		Range
	dec.	**hex.**		**dec.**	**hex.**	
> 155.00	32767	7FFF	> 311.00	32767	7FFF	Overflow
155.00 : 130.01	15500 : 13001	3C8C : 32C9	311.00 : 266.01	31100 : 26601	797C : 67E9	Overrange
130.00 : -120.00	13000 : -12000	32C8 : D120	266.00 : -184.00	26600 : -18400	67E8 : B820	Nominal range
-120.01 : -145.00	-12001 : -14500	D11F : C75C	-184.01 : -229.00	-18401 : -22900	B81F : A68C	Underrange
< -145.00	-32768	8000	< -229.00	-32768	8000	Underflow

Table C-13 Resistance-type thermometer Ni 100 standard

Ni 100 Standard in °C (1 digit = 0.1 °C)	Values		Ni 100 Standard in °F (1 digit = 0.1 °F)	Values		Ni 100 Standard in K (1 digit = 0.1 K)	Values		Range
	dec.	hex.		dec.	hex.		dec.	hex.	
> 295.0	32767	7FFF	> 563.0	32767	7FFF	> 568.2	32767	7FFF	Overflow
295.0 : 250.1	2950 : 2501	B86 : 9C5	563.0 : 482.1	5630 : 4821	15FE : 12D5	568.2 : 523.3	5682 : 5233	1632 : 1471	Overrange
250.0 : -60.0	2500 : -600	9C4 : FDA8	482.0 : -76.0	4820 : -760	12D4 : FD08	523.2 : 213.2	5232 : 2132	1470 : 854	Nominal range
-60.1 : -105.0	-601 : -1050	FDA7 : FBE6	-76.1 : -157.0	-761 : -1570	FD07 : F9DE	213.1 : 168.2	2131 : 1682	853 : 692	Underrange
< -105.0	-32768	8000	< -157.0	-32768	8000	< 168.2	32768	8000	Underflow

Table C-14 Resistance-type thermometer Ni 100 Climate

Ni 100 Climate in °C (1 digit = 0.01 °C)	Values		Ni 100 Climate in °F (1 digit = 0.01 °F)	Values		Range
	dec.	hex.		dec.	hex.	
> 155.00	32767	7FFF	> 311.00	32767	7FFF	Overflow
155.00 : 130.01	15500 : 13001	3C8C : 32C9	311.00 : 266.01	31100 : 26601	797C : 67E9	Overrange
130.00 : -60.00	13000 : -6000	32C8 : E890	266.00 : -76.00	26600 : -7600	67E8 : E250	Nominal range
-60.01 : -105.00	-6001 : -10500	E88F : D6FC	-76.01 : -157.00	-7601 : -15700	E24F : C2AC	Underrange
< - 105.00	-32768	8000	< - 157.00	-32768	8000	Underflow

C.3.4 Measured values for wire break diagnostics

Measured values for "Wire break" diagnostics as a function of diagnostics enables

With suitable parameter assignment, events that occur trigger a diagnostics entry and a diagnostics interrupt.

Table C-15 Measured values for wire break diagnostics

Format	Parameter assignment	Measured values		Explanation
S7	• "Wire break" diagnostics enabled • "Overflow/Underflow" diagnostics enabled or disabled ("Wire break" diagnostics has a higher priority than "Overflow/Underflow" diagnostics)	32767	$7FFF_H$	"Wire break" or "Cable break" diagnostics alarm

Format	Parameter assignment	Measured values		Explanation
	• "Wire break" diagnostics disabled • "Overflow/Underflow" diagnostics enabled	-32767	8000_H	• Measured value after leaving the underrange • Diagnostics alarm "Low limit" violated
	• "Wire break" diagnostics disabled • "Overflow/Underflow" diagnostics disabled	-32767	8000_H	Measured value after leaving the underrange

C.4 Representation of output ranges

The tables below set out the digitalized representation of the output ranges separately for bipolar and unipolar ranges. The resolution is 16 bits.

Table C-16 Bipolar output ranges

Dec. value	Output value in %	Data word																Range
		2^{15}	2^{14}	2^{13}	2^{12}	2^{11}	2^{10}	2^9	2^8	2^7	2^6	2^5	2^4	2^3	2^2	2^1	2^0	
32511	117.589	0	1	1	1	1	1	1	0	1	1	1	1	1	1	1	1	Maximum output value*
32511	117.589	0	1	1	1	1	1	1	0	1	1	1	1	1	1	1	1	Overrange
27649	100.004	0	1	1	0	1	1	0	0	0	0	0	0	0	0	0	1	
27648	100.000	0	1	1	0	1	1	0	0	0	0	0	0	0	0	0	0	Nominal range
1	0.003617	0	0	0	0	0	0	0	0	0	0	0	0	0	0	0	1	
0	0.000	0	0	0	0	0	0	0	0	0	0	0	0	0	0	0	0	
-1	-0.003617	1	1	1	1	1	1	1	1	1	1	1	1	1	1	1	1	
-27648	-100.000	1	0	0	1	0	1	0	0	0	0	0	0	0	0	0	0	
-27649	-100.004	1	0	0	1	0	0	1	1	1	1	1	1	1	1	1	1	Underrange
-32512	-117.593	1	0	0	0	0	0	0	1	0	0	0	0	0	0	0	0	
-32512	-117.593	1	0	0	0	0	0	0	1	0	0	0	0	0	0	0	0	Minimum output value**

* When values > 32511 are specified, the output value is limited to 117.589%.

** When values < -32512 are specified, the output value is limited to -117.593%.

Table C-17 Unipolar output ranges

Dec. value	Output value in %	Data word																Range
		2^{15}	2^{14}	2^{13}	2^{12}	2^{11}	2^{10}	2^9	2^8	2^7	2^6	2^5	2^4	2^3	2^2	2^1	2^0	
32511	117.589	0	1	1	1	1	1	1	1	x	x	x	x	x	x	x	x	Maximum output value*
32511	117.589	0	1	1	1	1	1	1	0	1	1	1	1	1	1	1	1	Overrange
27649	100.004	0	1	1	0	1	1	0	0	0	0	0	0	0	0	0	1	
27648	100.000	0	1	1	0	1	1	0	0	0	0	0	0	0	0	0	0	Nominal range

* When values > 32511 are specified, the output value is limited to 117.589%.

** When values < 0 are specified, the output value is limited to 0%.

1	0.003617	0	0	0	0	0	0	0	0	0	0	0	0	0	0	0	1	Nominal range
0	0.000	0	0	0	0	0	0	0	0	0	0	0	0	0	0	0	0	
0	0	0	0	0	0	0	0	0	0	0	0	0	0	0	0	0	0	Minimum output value**

* When values > 32511 are specified, the output value is limited to 117.589%.

** When values < 0 are specified, the output value is limited to 0%.

C.4.1 Representation of analog values in the voltage output ranges

The tables below list the decimal and hexadecimal values (codes) of the possible voltage output ranges.

Table C-18 Voltage output range ±10 V

Values			Voltage output range	Range
	dec.	**hex.**	**±10 V**	
>117.589%	>32511	>7EFF	11.76 V	Maximum output value
117.589%	32511	7EFF	11.76 V	Overrange
	27649	6C01		
100%	27648	6C00	10 V	Nominal range
75%	20736	5100	7.5 V	
0.003617%	1	1	361.7 µV	
0%	0	0	0 V	
	-1	FFFF	-361.7 µV	
-75%	-20736	AF00	-7.5 V	
-100%	-27648	9400	-10 V	
	-27649	93FF		Underrange
-117.593%	-32512	8100	-11.76 V	
<-117.593%	<-32512	< 8100	-11.76 V	Minimum output value

Table C-19 Voltage output range 0 V to 10 V

Values			Voltage output range	Range
	dec.	**hex.**	**0 to 10 V**	
>117.589%	>32511	>7EFF	11.76 V	Maximum output value
117.589%	32511	7EFF	11.76 V	Overrange
	27649	6C01		
100%	27648	6C00	10 V	Nominal range
75%	20736	5100	7.5 V	
0.003617%	1	1	361.7 µV	
0%	0	0	0 V	
<0%	<0	<0	0 V	Minimum output value

Table C-20 Voltage output range 1 V to 5 V

Values			Voltage output range	Range
	dec.	**hex.**	**1 to 5 V**	
>117.589%	>32511	>7EFF	5.70 V	Maximum output value
117.589%	32511	7EFF	5.70 V	Overrange
	27649	6C01		
100%	27648	6C00	5 V	Nominal range
75%	20736	5100	4 V	
0.003617%	1	1	1 V +144.7 µV	
0%	0	0	1 V	
	-1	FFFF	1 V -144.7 µV	Underrange
-25%	-6912	E500	0 V	
<-25%	<-6912	<E500	0 V	Minimum output value

C.4.2 Representation of analog values in the current output ranges

The tables below list the decimal and hexadecimal values (codes) of the possible current output ranges.

Table C-21 Current output range ±20 mA

Values			Current output range	Range
	dec.	**hex.**	**±20 mA**	
>117.589%	>32511	>7EFF	23.52 mA	Maximum output value
117.589%	32511	7EFF	23.52 mA	Overrange
	27649	6C01		
100%	27648	6C00	20 mA	Nominal range
75%	20736	5100	15 mA	
0.003617%	1	1	723.4 mA	
0%	0	0	0 mA	
	-1	FFFF	-723.4 mA	
-75%	-20736	AF00	-15 mA	
-100%	-27648	9400	-20 mA	
	-27649	93FF		Underrange
-117.593%	-32512	8100	-23.52 mA	
<-117.593%	<-32512	<8100	-23.52 mA	Minimum output value

Table C-22 Current output range 0 to 20 mA

Values			Current output range	Range
	dec.	**hex.**	**0 to 20 mA**	
>117.589%	>32511	>7EFF	23.52 mA	Maximum output value
117.589%	32511	7EFF	23.52 mA	Overrange
	27649	6C01		
100%	27648	6C00	20 mA	

Values			Current output range	Range
75%	20736	5100	15 mA	Nominal range
0.003617%	1	1	723.4 mA	
0%	0	0	0 mA	
<0%	<0	<0	0 mA	Minimum output value

Table C-23 Current output range 4 to 20 mA

Values			Current output range	Range
	dec.	**hex.**	**4 to 20 mA**	
>117.589%	>32511	>7EFF	22.81 mA	Maximum output value
117.589%	32511	7EFF	22.81 mA	Overrange
	27649	6C01		
100%	27648	6C00	20 mA	Nominal range
75%	20736	5100	16 mA	
0.003617%	1	1	4 mA	
0%	0	0	4 mA	
	-1	FFFF		Underrange
-25%	-6912	E500	0 mA	
<-25%	<-6912	<E500	0 mA	Minimum output value