SIEMENS

SIMATIC

ET 200SP HA
Interface Module IM 155-6 PN HA
(6DL1155-6AU00-0PM0)

Manual

Security information 1

Preface 2

Product overview 3

Wiring 4

Parameters 5

Maintenance 6

Displays and interrupts 7

Technical specifications 8

Diagnostic messages A

10/2018
A5E39262148-AC

Legal information

Warning notice system

This manual contains notices you have to observe in order to ensure your personal safety, as well as to prevent damage to property. The notices referring to your personal safety are highlighted in the manual by a safety alert symbol, notices referring only to property damage have no safety alert symbol. These notices shown below are graded according to the degree of danger.

⚠ DANGER

indicates that death or severe personal injury **will** result if proper precautions are not taken.

⚠ WARNING

indicates that death or severe personal injury **may** result if proper precautions are not taken.

⚠ CAUTION

indicates that minor personal injury can result if proper precautions are not taken.

NOTICE

indicates that property damage can result if proper precautions are not taken.

If more than one degree of danger is present, the warning notice representing the highest degree of danger will be used. A notice warning of injury to persons with a safety alert symbol may also include a warning relating to property damage.

Qualified Personnel

The product/system described in this documentation may be operated only by **personnel qualified** for the specific task in accordance with the relevant documentation, in particular its warning notices and safety instructions. Qualified personnel are those who, based on their training and experience, are capable of identifying risks and avoiding potential hazards when working with these products/systems.

Proper use of Siemens products

Note the following:

⚠ WARNING

Siemens products may only be used for the applications described in the catalog and in the relevant technical documentation. If products and components from other manufacturers are used, these must be recommended or approved by Siemens. Proper transport, storage, installation, assembly, commissioning, operation and maintenance are required to ensure that the products operate safely and without any problems. The permissible ambient conditions must be complied with. The information in the relevant documentation must be observed.

Trademarks

All names identified by ® are registered trademarks of Siemens AG. The remaining trademarks in this publication may be trademarks whose use by third parties for their own purposes could violate the rights of the owner.

Disclaimer of Liability

We have reviewed the contents of this publication to ensure consistency with the hardware and software described. Since variance cannot be precluded entirely, we cannot guarantee full consistency. However, the information in this publication is reviewed regularly and any necessary corrections are included in subsequent editions.

Siemens AG
Division Process Industries and Drives
Postfach 48 48
90026 NÜRNBERG
GERMANY

A5E39262148-AC
℗ 10/2018 Subject to change

Copyright © Siemens AG 2017 - 2018.
All rights reserved

Table of contents

1 Security information....5
2 Preface....7
3 Product overview....9
3.1 Properties....9
3.2 Shared Device....12
3.2.1 Using IO device as Shared Device....12
3.2.2 Basic requirements for using shared devices....13
3.2.3 Shared device in the same STEP 7 project....14
3.2.4 Shared device in different STEP 7 projects....15
3.3 Configuration limit for IO devices....18
4 Wiring....21
4.1 Pin assignment....21
4.2 Schematic circuit diagram....23
5 Parameters....25
5.1 Parameter assignment....25
6 Maintenance....27
6.1 Exchanging the BusAdapter or interface of the distributed I/O....27
7 Displays and interrupts....29
7.1 Status and error displays....29
7.2 Interrupts....33
8 Technical specifications....35
A Diagnostic messages....43
A.1 Diagnostics messages and maintenance events....43
A.2 Diagnostics of a shared device....45

Security information

1

Siemens provides products and solutions with industrial security functions that support the secure operation of plants, systems, machines, and networks.

In order to protect plants, systems, machines and networks against cyber threats, it is necessary to implement – and continuously maintain – a holistic, state-of-the-art industrial security concept. Siemens' products and solutions only form one element of such a concept.

Customer is responsible to prevent unauthorized access to its plants, systems, machines and networks. Systems, machines and components should only be connected to the enterprise network or the internet if and to the extent necessary and with appropriate security measures (e.g. use of firewalls and network segmentation) in place.

Additionally, Siemens' guidance on appropriate security measures should be taken into account. You can find more information about industrial security by visiting: https://www.siemens.com/industrialsecurity.

Siemens' products and solutions undergo continuous development to make them more secure. Siemens strongly recommends you apply product updates as soon as available and always use the latest product versions. Use of product versions that are no longer supported, and failure to apply latest updates may increase customer's exposure to cyber threats.

To stay informed about product updates, subscribe to the Siemens Industrial Security RSS Feed under
https://www.siemens.com/industrialsecurity.

Preface

2

Validity of the documentation

This product manual describes the IM 155-6 PN HA interface module with the article number 6DL1155-6AU00-0PM0.

It supplements the system manual of the *ET 200SP HA Distributed I/O System*.

Functions that generally relate to the system are described in this manual.

The information in this product manual, system manual and function manual enables you to commission the ET 200SP HA distributed I/O system.

Conventions

Please also observe notes marked as follows:

Note

A note contains important information on the product described in the documentation, on the handling of the product, or on the section of the documentation to which particular attention should be paid.

Product overview

3

3.1 Properties

View

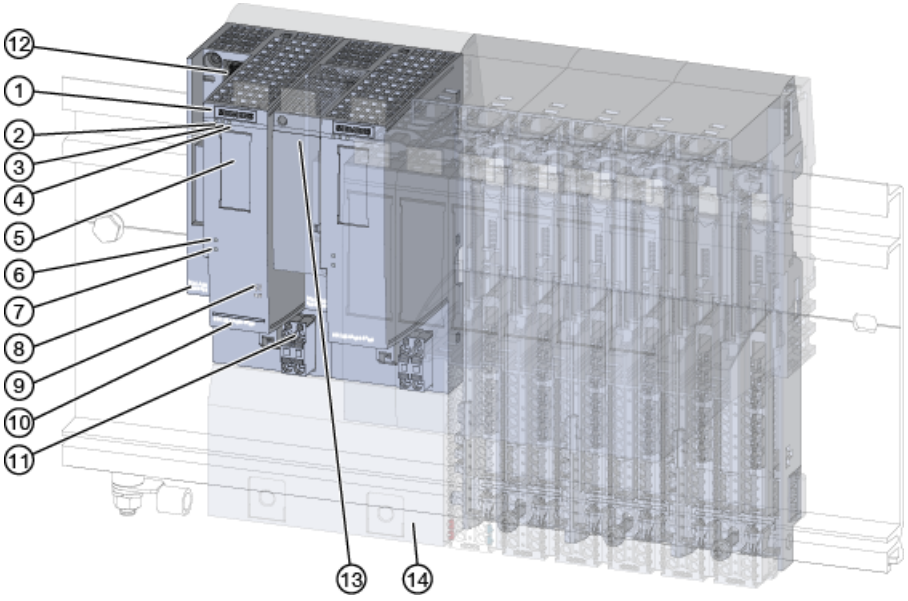

① Module type and designation	⑧ MAC address (specific address for this exact module)
② LED for operating state	⑨ Function status and firmware version
③ LED for diagnostics	⑩ Article number
④ LED for maintenance	⑪ Connector for supply voltage
⑤ 2D matrix code	⑫ Slot for PROFINET BusAdapter
⑥ LED for master operation	⑬ PROFINET BusAdapter
⑦ LED for supply voltage	⑭ Terminal block for interface module (figure: for redundant interface modules)

Figure 3-1 View of IM 155-6 PN HA

Properties

The IM 155-6 PN HA, together with the carrier and BusAdapter, forms the interface of the ET 200SP HA.

The interface is used for communication between the CPU and the connected ET 200SP HA I/O modules via PROFINET IO.

The interface has the following technical properties:

- Supply voltage 1L+ 24 V DC (SELV/PELV).
  The supply voltage is fed via the carrier module.
  The connection plug is included in the scope of delivery of the interface module.
- PROFINET IO connection via BusAdapter (see following paragraph, "Accessories")

The interface supports the following functions:

- Firmware update
- I&M identification data
- Pulling and plugging modules in RUN
- Value status QI
- IO redundancy
- Time stamping
- Multi Hot Swap (pulling/plugging of multiple I/O modules during operation)
- Saving service data
- Recording the value status of I/O modules
- Reference temperature distribution

You can configure the interface with HW Config and integrate it into your system

Note

The IM 155-6 PN HA cannot be pulled/plugged when the associated connector for the supply voltage is plugged in.

PROFINET IO functions

The interface supports the following PROFINET IO functions:

- Integrated BusAdapter with 2 ports
- Supported Ethernet services: ping, arp, network diagnostics (SNMP)/MIB-2, LLDP-MIB and MRP-MIB
- Port diagnostics
- Disabling of ports
- Minimum update time of 250 µs
- Device replacement without programming device (PG)
- Reset to factory settings via PROFINET IO
- System redundancy S2
- System redundancy R1
- Media redundancy (MRP)

- Support of submodules on suitable I/O modules
- Shared Device (as of FW V1.1)

Accessories

The following accessories must be ordered separately:

BusAdapter

Type	Article number	Function
BA 2×RJ45	6DL1193-6AR00-0AA0	Adapter for Ethernet cable with RJ45 connector
BA 2×FC	6DL1193-6AF00-0AA0	Adapter for direct connection of the Fast Connect bus cable
BA 2xLC	6DL1193-6AG00-0AA0	Adapter for glass fiber optic cable with IE FC LC Plug
BA LC/RJ45	6DL1 193-6AG20-0AA0	Adapter for glass fiber optic cable with IE FC LC Plug and Ethernet cable with RJ45 connector
BA LC/FC	6DL1 193-6AG40-0AA0	Adapter for glass fiber optic cable with IE FC LC Plug and direct connection of the Fast Connect bus cable
BA 2xRJ45VD HA	6GK5 991-2VA00-8AA2	Adapter for connection of an IO device to the PROFINET IO system using a 2-wire system with copper wires

Carrier modules

- Carriers for the IM 155-6 PN HA are available in the following variants:
  - Carrier for one IM 155-6 PN HA
  - Carrier for two IM 155-6 PN HA for redundant configuration

  The carriers connect the IM 155-6 PN HA to the backplane bus. They enable data exchange with the I/O modules.

Server module and power bus cover

- The server module and power bus cover are included in the product package of the carrier module and are available separately as accessories.
- The server module and power bus cover terminate the configuration of the ET 200SP HA.
- Place the server module and the power bus cover at the end of the configuration.
  The power bus cover serves to protect the power bus contacts.

Marking options

- Labeling strips
- Reference identification label

3.2 Shared Device

3.2.1 Using IO device as Shared Device

Shared Device

Shared Device is a function of an IO device. This function allows you to split submodules of an IO device between different IO controllers. Data from sensors in close proximity can be passed to different IO controllers.

Distribution of the shared device submodules

Access to the submodules of the shared device is distributed among the individual IO controllers. Each submodule of the shared device can be assigned exclusively to one IO controller.
When a shared device is configured on a redundant IO controller, all submodules of the interface module must be assigned to the redundant IO controller.

Requirement

The following STEP 7 support package is installed: HSP 272 (V1.1 or higher).

Configuration basics

- I/O addresses can be assigned as usual for the submodules (assigned to the controller)
- A shared device must have the same IP parameters and the same device name in each station. The following two cases must be distinguished during configuration:
  - Shared device in the same STEP 7 project:
    STEP 7 is responsible for the consistency check functions, verification of correct assignment of the IP parameters and monitoring for correct access of the IO controllers to the individual submodules.
  - Shared device in different projects:
    The stations with the IO controllers that use the shared device are created in different projects. It must be ensured in each project that the shared device has the exact same configuration in each station. Only one IO controller may have full access to a submodule at any given time. The IP parameters and device names must be identical. Inconsistencies in the configuration will result in a failure of the shared device.

Access types

Each submodule can be assigned to only one IO controller.

Access types and their meaning:

- Full access
  The IO controller has full access to the submodule and its logical address. Rights of the IO controller:
  - Read and write access to input data, output data and data records
  - Parameter assignment of the submodule
  - Receiving alarms of the submodule
- No access
  The IO controller does not have access to the submodule (and the submodule therefore has no logical address). This means the following for the IO controller:
  - Data exchange is not possible with the submodule
  - Alarms of the submodule cannot be received
  - Submodules cannot be configured

See also

Basic requirements for using shared devices (Page 13)

3.2.2 Basic requirements for using shared devices

Basic requirements

Note the following basic requirements when using shared devices.

Redundant IO device (distributed I/O device with redundant interface modules)

An IO device with redundant interface modules cannot be configured as a shared device.

Send clock for shared devices

The Shared Device function can only be used with even send clocks.

CiR (Configration in RUN) disabled

When the "Shared Device" function is enabled, you can only make configuration changes when the CPU is in STOP.

Time stamping

The use of shared devices with the "Time stamping" function of signal changes has the following effects:

- Only signals of the CPU to which the station with shared devices is connected can be evaluated/compared.
- It is not permissible to compare signals with time stamp across CPUs.

Redundant modules (module pairs)

When redundant modules are configured as shared, they must be assigned to the same IO controller.

3.2.3 Shared device in the same STEP 7 project

Introduction

The example below describes the most basic configuration of a shared device: Two IO controllers share the I/O modules of an IO device. The two IO controllers are located in the same STEP 7 project, which means the consistency check is performed automatically.

To use the Shared Device function, configuration steps are required in SIMATIC Manager as well as in HW Config.

In the example below, the configuration of the shared device is described based on the PROFINET IO device ET 200SP HA (IM 155-6 PN HA) on a SIMATIC CPU 410-5H.

Preparation

1. Create a project called "Shared-Device-Project" in SIMATIC Manager.
2. Add the two stations (SIMATIC 410).
3. Open the stations in HW Config and configure a CPU with PROFINET interface (a CPU 410-5H in the described case).
4. Assign parameters to the PROFINET interfaces of the stations created this way.
5. "Save and compile" the individual stations.

Creating a shared device

1. Open one of the previously created stations in HW Config.
2. Configure a PROFINET IO device ET 200SP HA (IM 155-6 PN HA) with its own I/O modules.
3. Copy the created IO device using the shortcut menu (right-click).
4. Save the hardware configuration and close the configured station.
5. Open the other previously created station in HW Config.
6. To add the IO device as a shared device, right-click the PROFINET IO system.

7. In the shortcut menu, select the command "Paste Shared".
8. Save and compile the hardware configuration and close HW Config and the project.

Result

The shared device is created. You assign the submodules to the configured stations.

Assigning submodules

The submodules must be assigned separately for each station. Note that changes to one station affect other station(s). A submodule can only be assigned to one station.

1. Open the property dialog of the PROFINET IO device in the first station.
2. Go to the "Access" tab.
3. Configure the access to the individual submodules.
   To do this, select the type of access in the "Value" column of the drop-down list. You can choose from:
   Note that the setting "full" automatically results in the setting "- - -" in the other station(s).
   - No access to the submodule: "- - -"
   - Full access to the submodule: "full"
4. Save and compile the station and close it.
5. Repeat steps 1 to 4 for the second station.
6. Finally, download the configuration to the stations.

Shared device in the user program

The shared device has no special role in the user program. The submodules assigned to the station are addressed as usual using their addresses, while the other submodules are not given an address.

3.2.4 Shared device in different STEP 7 projects

Introduction

The example below describes the configuration of a shared device in different STEP 7 projects. Two IO controllers share the submodules of an IO device in the example.

To use the Shared Device function, configuration steps are required in SIMATIC Manager as well as in HW Config.

In the example below, the configuration of a shared device is described based on the PROFINET IO device ET 200SP HA (IM 155-6 PN HA) on a SIMATIC CPU 410-5H as IO controller.

Preparation

1. Create a project called "Shared-Device-1" in SIMATIC Manager.
2. Add a station (SIMATIC 410-5H) with the name "CPU1".
3. Open the station in HW Config and configure the CPU with PROFINET interface (a SIMATIC S7 410-5H in the described case).
4. Assign parameters to the PROFINET interface of the station created.
5. "Save and compile" the station and close the project.
6. Create a second project called "Shared-Device-2" in SIMATIC Manager.
7. Add a station (e.g. SIMATIC S7 417) with the name "CPU2".
8. Repeat steps 3 to 5.

Creating a shared device

1. Open the project "Shared-Device-1".
2. Open the station of the IO controller "CPU1" in HW Config.
3. Configure a PROFINET IO device ET 200SP HA (IM 155-6 PN HA) with its own I/O modules.
4. Write down the exact configuration of the IO device ET 200SP HA created this way.
5. Save and compile the hardware configuration and close HW Config and the project.
6. Open the other previously created project "Shared-Device-2".
7. Open the station of the IO controller "CPU2" in HW Config.
8. Configure the PROFINET IO device ET 200SP HA with the exact same configuration as that of the IO device ET 200SP HA in the project "Shared-Device-1" in the station "CPU1" (notes from step 4.).
9. Save and compile the hardware configuration and close HW Config and the project.

Result

The shared device is created. You assign the submodules to the configured stations.

Note

Send clock

When using the shared device across multiple projects, make sure that the send clock for the shared device is set to the same value in the projects. Otherwise, the shared device cannot be adopted by the IO controller of the configured station.

Assigning submodules

At least one submodule must be assigned to each station.

The submodules must be assigned separately for each station. Note that changes to one station affect other station(s).

Note

Access rules

A submodule may only be assigned to one IO controller at any given time in HW Config. This means that the submodule in slot 4, for example, can only be assigned to the "CPU1" with the setting "full access"; in "CPU2" the setting for the submodule in slot 4 must therefore be "- - -" (corresponds to "no access").

1. Open the station of the IO controller "CPU1" from the project "Shared-Device-1" in HW Config.
2. Open the property dialog of the PROFINET IO device.
3. Go to the "Access" tab.
4. Configure the access to the individual submodules.
   To do this, select the type of access in the "Value" column of the drop-down list.
   You can choose from:
   - No access to the submodule: "- - -"
   - Full access to the submodule: "full"
5. Save and compile the hardware configuration and close HW Config and the project.
6. Open the station of the IO controller "CPU2" from the project "Shared-Device-2" in HW Config.
7. Repeat steps 2 to 5.

Bandwidth reservation

When configuring shared devices in different projects, STEP 7 needs information on the locations of use of the shared device to ensure correct calculation of the bandwidth. Make the settings listed below in **both** projects:

1. Open the project "Shared-Device-1".
2. Open the station of the IO controller "CPU1" from the project "Shared-Device-1" in HW Config.
3. Open the property dialog of the PROFINET IO interface and go to the "Shared Device" tab.
4. Set the following:
   - When the IO controller has full access to the interface module of the IO device: The number of external controllers that access the IO device.
   - When the IO controller has no access to the interface module of the IO device: The send clock of the IO controller with full access.
5. Save and compile the configuration.
6. Repeat steps 1 to 5 for the project "Shared device-2" with CPU2
7. Download the configuration to the stations.

Note

Changing projects

Note that changes to a shared device (e.g. at the interface or port) must always be made in all projects in which the shared device is being used. The projects must subsequently be compiled and downloaded.

Shared device in the user program

The shared device has no special role in the user program. The submodules assigned to the station are addressed as usual using their addresses, while the other submodules are not given an address.

3.3 Configuration limit for IO devices

Connections to IO controllers

IO devices can be connected to a maximum of 4 IO controllers.

Maximum number of permitted bytes in the input data area or for bytes in the output data area for the IO device

The maximum number of bytes in the input data area or for bytes in the output data area depends on the following:

- Connection type
- Number of IO controllers with connection to the shared device
- Configuration in Run

Table 3-1 Maximum number of permitted bytes in the input data area or for bytes in the output data area

Connection type	Number of IO controllers with connection to the shared device	Requirement for the input data or output data
Without system redundancy	1 IO controller	Maximum of 1440 bytes each
	2 IO controllers	Maximum of 1440 bytes for each controller
	3 or 4 IO controllers	Maximum of 360 bytes each
System redundancy S2	1 redundant IO controller	Maximum of 1000 bytes each
	1 redundant IO controller and 1 additional IO controller	Maximum of 360 bytes each
System redundancy R1		Maximum of 1440 bytes each

How many I/O modules can be configured in an ET 200SP HA IO device?

You can find information on this on the Internet:

FAQ: How many I/O modules can be configured in an ET 200SP HA station? (https://support.industry.siemens.com/cs/ww/en/view/109760425)

Wiring

4

4.1 Pin assignment

24 V DC supply voltage

The following table shows the signal names and the descriptions of the pin assignment for a 24 V DC supply voltage.

Table 4-1 Pin assignment 24 V DC supply voltage

View		Signal name[1]	Description
Plug	IM connection		
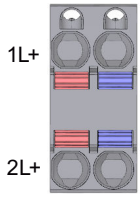	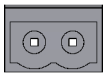	1L+	24 V DC
		2L+	24 V DC (for looping through)[2]
		1M	Ground
		2M	Ground (for looping through)[2]

1 1L+ and 2L+ as well as 1M and 2M are bridged internally.

2 Maximum 10 A permitted.

Each interface module has its own 24 V connection.

Connecting the PROFINET IO with RJ45 connector to the BusAdapter

The following table shows the signal name and designation of the pin assignment using the BusAdapter BA 2×RJ45 as an example.

Table 4-2 Pin assignment of PROFINET IO with BusAdapter BA 2×RJ45

View	Signal name		Description
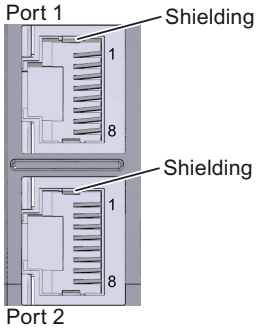	1	TD	Transmit data +
	2	TD_N	Transmit data –
	3	RD	Receive data +
	4	GND	Ground
	5	GND	Ground
	6	RD_N	Receive data –
	7	GND	Ground
	8	GND	Ground

Connecting PROFINET IO with FC cables to the BusAdapter

The following table shows the signal name and designation of the pin assignment using the BusAdapter BA 2×FC as an example.

Table 4-3 Pin assignment of PROFINET IO with BusAdapter BA 2×FC

View	Signal name		Description
Port 1 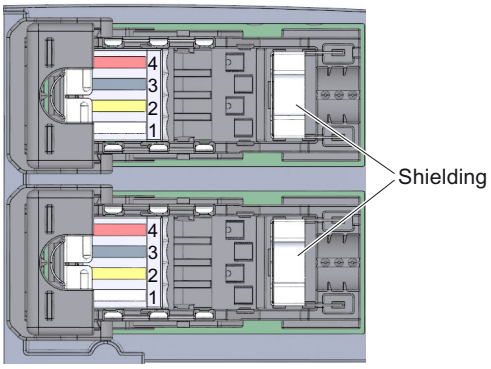 Port 2	1	TD	Transmit data +
	2	TD_N	Transmit data –
	3	RD	Receive data +
	4	RD_N	Receive data -

Connecting PROFINET IO with LC connector to the BusAdapter

The following table shows the signal name and designation of the pin assignment using the BusAdapter BA 2×LC as an example.

Table 4-4 Pin assignment of PROFINET IO with BusAdapter BA 2×LC

View	Signal name	Description
Port 1 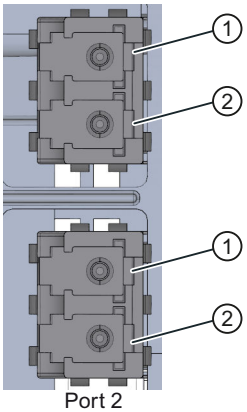 Port 2	①	Receiver / Receive data
	②	Sender / Transmit data

4.2 Schematic circuit diagram

Schematic circuit diagram

The following figure shows the block diagram of the IM 155-6 PN HA interface module.

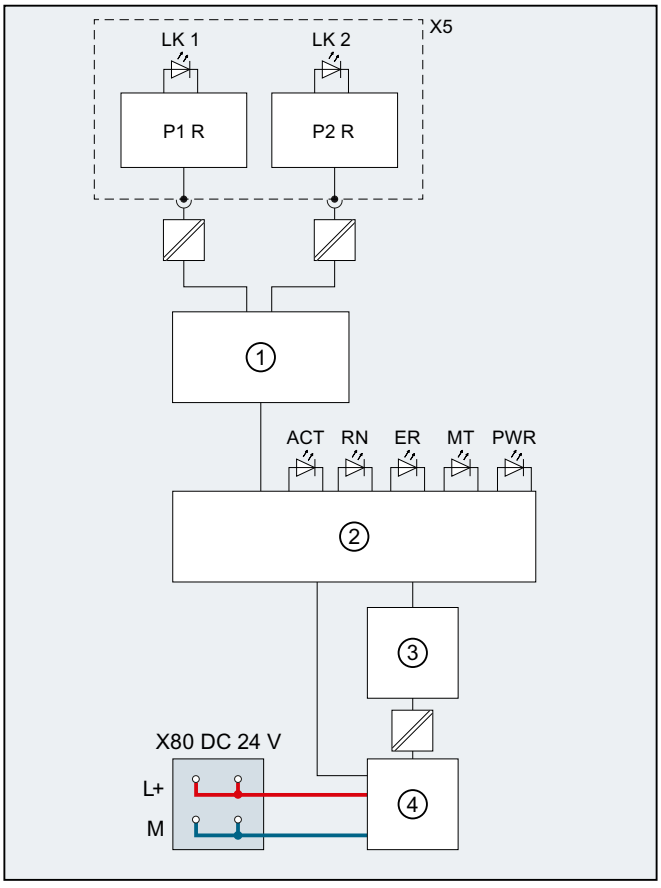

①	Switch	L+	Supply voltage (24 V DC)
②	Backplane bus connection and electronics	M	Ground
③	Backplane bus	LK 1,2	Link TX/RX LED
④	Internal voltage distribution	ACT	ACT LED
X80	Supply voltage infeed (24 V DC)	RN	RUN LED (green)
X5	BusAdapter	ER	ERROR LED (red)
P1 R	PROFINET interface X1 Port 1	MT	MAINTENANCE LED (yellow)
P2 R	PROFINET interface X1 Port 2	PWR	Power LED (green)

Figure 4-1 Block diagram for the IM 155-6 PN HA interface module

Parameters

5

5.1 Parameter assignment

Configuring

You configure the ET 200SP HA on a CPU 410 as of FW V8.2.

Parameters

The parameter assignment specifies the properties of the IO device.

Additional information

You can find information on basic procedures and available settings in the following documentation:

- STEP 7 online help
- Function manual *SIMATIC; ET 200SP HA; ET 200SP HA - High-precision Time Stamping*
- When PCS 7 as of V9.0 is used:
  - Configuration manual *PCS 7 Process Control System; Engineering System* V9.0
  - Function manual *SIMATIC; Process Control System PCS 7; High-precision Time Stamping with ET 200SP HA*

Maintenance 6

6.1 Exchanging the BusAdapter or interface of the distributed I/O

The device name of the distributed I/O device is saved at the following locations when transferring the device name to the distributed I/O:

- In the BusAdapter
- In the interface of the distributed I/O device (e.g. interface module or I/O device itself)

Note

Replacing a BusAdapter (removing/inserting)

Removing/inserting the BusAdapter under voltage is prohibited.

Device replacement without transfer of topological configuration

The following scenarios are the result of saving the device name on the BusAdapter and in the interface when exchanging the two components:

	Interface non-programmed (without device name)	Interface with device name
BusAdapter non-programmed (without device name)	No device names	When the supply voltage is switched on, the device name is copied from the interface to the BusAdapter.
BusAdapter with device name	When the supply voltage is switched on, the device name is copied from the BusAdapter to the interface.	

Note

Restoring the factory settings

Resetting to factory settings deletes the device name in the interface and in the BusAdapter.

Displays and interrupts

7

7.1 Status and error displays

LED displays

The status and error displays of the IM 155-6 PN HA are shown in the figure below.

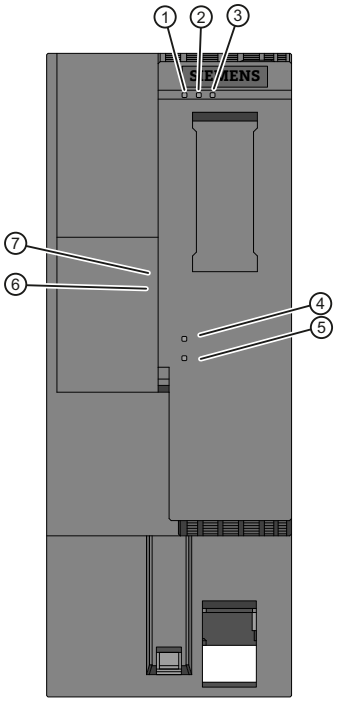

① RN LED (green)
② ER LED (red)
③ MT LED (yellow)
④ ACT LED (green)
⑤ PWR LED (green)

On BusAdapter:

⑥ LED LK1 (green)
⑦ LED LK2 (green)

Figure 7-1 LED displays on the interface module and BusAdapter

Meaning of the LED displays

The following tables provide the meaning of the status, error and maintenance displays. You can find remedies for diagnostic messages in the section Diagnostics messages and maintenance events (Page 43)

RN LED

Table 7-1 Status and error displays of the RN LED

RN LED	Meaning	Remedy
Off	No supply voltage or insufficient supply voltage at the interface module.	Check the supply voltage or switch it on at the interface module. Check the backplane bus for short-circuit
Flashes	Interface module is deactivated.	Activate the interface module with the configuration software or the user program.
	Interface module is not configured.	Configure the interface module with the configuration software.
	ET 200SP HA starts up.	---
	ET 200SP HA parameters are assigned	
On	ET 200SP HA is exchanging data with an IO controller.	---

ER LED

Table 7-2 Error displays of the ER LED

ER LED	Meaning	Remedy
Flashes	Group fault and group fault for channels	Evaluate the diagnostics and eliminate the error.
	Configured settings do not match the actual configuration of the ET 200SP HA.	Check the configuration of the ET 200SP HA for missing modules, defective modules or the presence of non-configured modules.
	Impermissible configuration states	You can find information about the hardware configuration of the ET 200SP HA in the system manual *ET 200SP HA Distributed I/O System*; System Planning, Hardware Configuration.
	Parameter assignment error in the I/O module	Evaluate the display of the module information in HW-Konfig and eliminate the error in the corresponding I/O module.

Note

Configuration errors are only checked when the station starts up and not during a CiR or H-CiR process.

MT LED

Table 7-3 Maintenance display of the MT LED

MT LED	Meaning
Off	Maintenance is not required.
On	Maintenance is required, meaning that at least one maintenance event has occurred.

Note

Redundant interface modules (IM): Maintenance LED and ER LED are illuminated on both IMs

If the station was configured with V1.0 in HW Config and both IMs have different firmware versions, the following behavior can occur:
Maintenance LED and ER LED are illuminated on both IMs.

The cause can be a firmware update of a redundant interface module (IM) from V1.0.x to a higher version or replacement of an IM.
Solution: Make sure that both IMs have the same firmware version.

ACT LED

Table 7-4 Status display of the ACT LED

ACT LED	Meaning (only relevant for IO device with redundant IM)
□ Off	There is no active data exchange with the I/O modules via this IM.
■ On	There is an active data exchange with the I/O modules via this IM. The partner IM can apply the data exchange.
☼ Flashes	There is an active data exchange with the I/O modules via this IM. The partner IM **cannot** apply the data exchange.

PWR LED

Table 7-5 Status display of the PWR LED

PWR LED	Meaning
□ Off	Missing supply voltage or insufficient supply voltage at the interface module.
■ On	Supply voltage L+ available.

LK1/LK2 LEDs on the BusAdapter

Table 7-6 Status and error displays of the LK1/LK2 LEDs

LED LK1/LK2	Meaning	Remedy
□ Off	There is no Ethernet connection between the PROFINET IO interface of your PROFINET device and a communication partner (e.g. IO controller).	Check whether the bus cable to the switch/IO controller is interrupted.
■ On	There is an Ethernet connection between the PROFINET IO interface of your PROFINET device and a communication partner (e.g. IO controller).	---
☼ Flashes	The "Node flash test" is run (the RN/ER/MTLEDs also flash).	---

Displaying configuration errors via LED

The **LEDs ERROR (red)** and **MAINT (yellow)** on the interface module display the following configuration errors:

- No server module
- Interruptions or short-circuit on the backplane bus

Operating principle

The LED error display provides information on the cause of the error. After notification by the flash signal, the error type is displayed followed by the error location/error code.

The LED error display

- takes precedence over all other states that are displayed by the ERROR and MAINT LEDs.
- remains switched on until the cause of the error is eliminated

Table 7-7 Display of error type and error location

Sequence		Description
1	ER and MT LEDs flash 3x at 0.5 Hz	Indication of the error type
2	MT LED flashes at 1 Hz	Display of the error type (decimal) (see following table (=1))
3	ER and MT LEDs flash 3x at 2 Hz	Indication of the error code
4	ER LED flashes at 1 Hz	Display of the tens digit (decimal) of the error code (see following table (=60))
5	MT LED flashes at 1 Hz	Display of ones digit (decimal) of the error code (see following table (=5))
6	Repeat steps 1 to 5 until the cause of the error has been eliminated.	

Error display

Table 7-8 Error display

Error type (MAINT)	Error code	Cause of error	Solution
1	65	• No server module • Interruptions on the backplane bus • Short-circuit on backplane bus	Check the configuration of the ET 200SP HA.

Note

The following LEDs indicate a short-circuit in the backplane bus supply or in the bus connection supply:

- LED PWR: On
- LED RN, ER and MT: Off

Displaying unsupported bus adapters

The **LEDs RN (flashing)**, **ER (flashing)** and **MAINT (off)** on the interface module indicate that an unsupported bus adapter is connected.

7.2 Interrupts

Diagnostics interrupts

Diagnostic interrupts are used by the IM 155-6 PN HA to signal diagnostic messages as well as maintenance events, see also appendix Diagnostics messages and maintenance events (Page 43)

The IM 155-6 PN HA generates a diagnostic interrupt for the following events:

- Faulty 24 V DC power supply
- Module parameter errors or incorrect carrier present in real slot
- Failure of redundancy partner
- Impermissible bus adapter on interface module
- Incorrect bus adapter in redundancy partner
- Permissible backplane bus size exceeded
- No server module

Diagnostics of I/O modules are forwarded by the IM 155-6 PN HA and depend on the respective I/O module.

Maintenance messages

The IM 155-6 PN HA generates a maintenance message for the following events:

- Different hardware/firmware in the redundancy partners
- IO redundancy warning
- Redundancy parameter assignment inconsistent
- Retentive memory in carrier module defective

Technical specifications

8

Article number	6DL1155-6AU00-0PM0
General information	
Product type designation	IM 155-6 PN
HW functional status	FS03
Firmware version	V1.1
Vendor identification (VendorID)	02AH
Device identifier (DeviceID)	030FH
Product function	
• I&M data	Yes; I&M0 to I&M3
Engineering with	
• PCS 7 configurable/integrated as of version	V9.0
Configuration control	
via dataset	No
Supply voltage	
Type of supply voltage	DC
Rated value (DC)	24 V
permissible range, lower limit (DC)	19.2 V
permissible range, upper limit (DC)	28.8 V
Reverse polarity protection	Yes
Short-circuit protection	Yes
Mains buffering	
• Mains/voltage failure stored energy time	10 ms
Input current	
Current consumption, max.	700 mA; +19.2 V to +28.8 V DC
Inrush current, max.	5 A
I^2t	0.36 $A^2 \cdot s$; Due to increased mains buffering of 10 ms
Power	
Infeed power to the backplane bus	7.5 W; No doubling in redundant mode as the in-feed power is also designed as redundant.
Power loss	
Power loss, typ.	2.4 W
Address area	
Address space per module	
• Address space per module, max.	256 byte
Address space per station	
• Address space per station, max.	1 440 byte; 1 440 bytes R1 and S1 without CiR, otherwise 1 000 bytes
Hardware configuration	
Integrated power supply	Yes; 24 V DC

Article number	6DL1155-6AU00-0PM0
Rack	
• Modules per rack, max.	56; 56 slots for I/O modules + server module (width without IM ≤ 1.3 m)
Time stamping	
Accuracy	1 ms; In compliance with the supplementary conditions described in the Equipment Manual
Interfaces	
Number of PROFINET interfaces	1; 2 ports (switch)
1. Interface	
Interface types	
• Number of ports	2; via BusAdapter
• integrated switch	Yes
• BusAdapter (PROFINET)	Yes; Compatible BusAdapters: BA 2x RJ45, BA 2x FC, BA 2x LC, BA LC/RJ45, BA LC/FC, BA VD
Protocols	
• PROFINET IO Device	Yes
• Open IE communication	Yes
• Media redundancy	Yes; as MRP client
Interface types	
RJ 45 (Ethernet)	
• Transmission procedure	PROFINET with 100 Mbit/s full duplex (100BASE-TX)
• 100 Mbps	Yes; PROFINET with 100 Mbit/s full duplex (100BASE-TX)
• Autonegotiation	Yes
• Autocrossing	Yes
PROFINET IO Device	
Services	
– Open IE communication	Yes
– MRP	Yes
– PROFINET system redundancy (S2)	Yes; S2, R1
Open IE communication	
• TCP/IP	Yes
• SNMP	Yes
• LLDP	Yes
Interrupts/diagnostics/status information	
Status indicator	Yes
Alarms	Yes
Diagnostic functions	Yes
Diagnostics indication LED	
• RUN LED	Yes; Green LED
• ERROR LED	Yes; Red LED
• MAINT LED	Yes; yellow LED

Article number	6DL1155-6AU00-0PM0
• ACTIVE-LED (active IM in redundant configuration)	Yes; Green LED
• Monitoring of the supply voltage (PWR-LED)	Yes; green PWR LED
• Connection display LINK TX/RX	Yes; 2x green link LEDs on BusAdapter
Potential separation	
between PROFINET and all other circuits	Yes; 1500 V AC
Permissible potential difference	
between different circuits	Safety extra low voltage SELV
Isolation	
Isolation tested with	1 500 V DC/1 min, type test
Ambient conditions	
Ambient temperature during operation	
• horizontal installation, min.	-40 °C
• horizontal installation, max.	70 °C
• vertical installation, min.	-40 °C
• vertical installation, max.	60 °C
Dimensions	
Width	50 mm
Height	138 mm
Depth	89 mm

Supplemental information on the address space for each operating mode

The size of user data attachment of the I/O modules depends on the type (1 byte if only input or output address space are allocated, or 2 bytes if both address spaces are allocated). You can determine the allocated address space from the technical specifications in the manuals of the I/O modules.

Article number	6DL1193-6AR00-0AA0
Interfaces	
Number of PROFINET interfaces	1; 2 ports (switch) RJ45
PROFINET IO	
• RJ 45	Yes; 2x RJ45
Cable length	
– Cu conductors	100 m
Ambient conditions	
Ambient temperature during operation	
• min.	-40 °C
• max.	70 °C
Dimensions	
Width	20 mm
Height	69.5 mm
Depth	59 mm
Weights	
Weight, approx.	46 g

Article number	6DL1193-6AG00-0AA0
Interfaces	
Number of PROFINET interfaces	1; 2 ports (switch) LC Multimode Glass Fibre
Supports protocol for PROFINET IO	
• Number of LC ports	2
Cable length	
– Multimode graded-index fiber 50/125 µm	3 km
– Multimode graded-index fiber 62.5/125 µm	3 km
Ambient conditions	
Ambient temperature during operation	
• min.	-40 °C
• max.	65 °C; Redundant design (2x 6DL1155-6AU00-0PM0): max. 60 °C horizontal, max. 50 °C vertical. When using different I/O devices, the derating specified there must be observed.
Dimensions	
Width	20 mm
Height	75 mm; Without protective caps (approx. 8 mm)
Depth	59 mm

Article number	6DL1193-6AF00-0AA0
Interfaces	
Number of PROFINET interfaces	1; 2 ports (switch) FC
Supports protocol for PROFINET IO	
• FC (FastConnect)	Yes; 2x
• Number of FC (FastConnect) connections	2
Cable length	
– Cu conductors	100 m
Ambient conditions	
Ambient temperature during operation	
• min.	-40 °C
• max.	70 °C
Dimensions	
Width	20 mm
Height	69.5 mm
Depth	59 mm

Article number	6DL1193-6AG20-0AA0
Interfaces	
Number of PROFINET interfaces	1; 2 ports (switch) LC / RJ45
Supports protocol for PROFINET IO	
• Number of RJ45 ports	1
• Number of LC ports	1; Wavelength of 1 270 ... 1 380 nm, corresponds to 100BASE-FX
Cable length	
– Cu conductors	100 m
– Multimode graded-index fiber 50/125 µm	3 km
– Multimode graded-index fiber 62.5/125 µm	3 km
Standards, approvals, certificates	
RoHS conformity	Yes
China RoHS compliance	Yes
Ambient conditions	
Ambient temperature during operation	
• min.	-40 °C
• max.	70 °C; = Tmax for horizontal installation; for vertical installation Tmax = 60 °C
Dimensions	
Width	20 mm
Height	75 mm; Without protective caps (approx. 8 mm)
Depth	59 mm
Weights	
Weight, approx.	32 g

Article number	6DL1193-6AG40-0AA0
Interfaces	
Number of PROFINET interfaces	1; 2 ports (switch) LC / FC
Supports protocol for PROFINET IO	
• Number of FC (FastConnect) connections	1
• Number of LC ports	1; Wavelength of 1 270 ... 1 380 nm, corresponds to 100BASE-FX
Cable length	
– Cu conductors	100 m
– Multimode graded-index fiber 50/125 µm	3 km
– Multimode graded-index fiber 62.5/125 µm	3 km
Standards, approvals, certificates	
RoHS conformity	Yes
China RoHS compliance	Yes
Ambient conditions	
Ambient temperature during operation	
• min.	-40 °C
• max.	70 °C; = Tmax for horizontal installation; for vertical installation Tmax = 60 °C
Dimensions	
Width	20 mm
Height	75 mm; Without protective caps (approx. 8 mm)
Depth	59 mm
Weights	
Weight, approx.	50 g

Diagnostic messages

A

A.1 Diagnostics messages and maintenance events

Diagnostic messages

For each diagnostic event, a diagnostic message is output and the ER LED flashes on the module.

The diagnostic messages can, for example, be read from the diagnostic buffer of the CPU.

There can be more than one diagnostics alarm at the same time.

Table A-1 Diagnostic messages, their meaning and possible remedies

Diagnostics message	Channel error type (CET)	Extended channel error type (CET)	Assignment	Meaning	Remedy
Configuration error: Station Stop – No server module	0x0602	0x0693	Configuration	No server module was present during power-up of an ET 200SP HA station.	Verify that the server module is correctly installed in the rack.
Configuration error: Module parameter <potential group> errors or incorrect terminal block present in real slot <slot>	0x0602	0x0691	Configuration	The installed terminal block does not match the configuration.	Ensure that a matching terminal block is installed.
Configuration error: Permissible backplane bus size exceeded	0x0602	0x0698	Configuration	The total width of the installed modules exceeds the permissible assembly length of 1300 mm.	Verify that the backplane bus configuration does not exceed the permissible size. The server module must be the last module plugged in (highest permissible slot number: 58).
Configuration error: Incorrect backplane bus configuration in slot <slot>	0x0602	0x0699	Configuration	The maximum current demand of all plugged-in modules exceeds 2100 mA. The accompanying <slot> value indicates the slot causing the error.	Check the configuration of the ET 200SP HA.
Configuration error: Impermissible bus adapter on interface module	0x0602	0x069C	Configuration	The installed bus adapter does not match the configuration.	Verify that a matching bus adapter is installed.
Configuration error: No server module	0x0602	0x069E	Configuration	The server module is pulled during operation of an ET 200SP HA station.	Ensure that the server module is correctly installed in the rack.

Diagnostics message	Channel error type (CET)	Extended channel error type (CET)	Assignment	Meaning	Remedy
Redundancy error: Failure in the partner module <internal error code>	0x0630	0x06D0	Redundant modules	Errors in the redundancy of the interface module are signaled. The accompanying <internal error code> value provides information for service experts.	Replace the partner interface module.
Redundancy error: Faulty power supply	0x0630	0x06D1	Redundant modules	Problems with the power supply.	Check the power supply for possible errors, e.g. overload, short-circuit. Replace the interface module, if necessary/
Redundancy error: Incorrect bus adapter in partner module	0x0630	0x06D2	Redundant modules	The bus adapter of the redundancy partner module is not present or is not supported.	Replace the bus adapter in the partner module.
Redundancy error: Redundancy partners have different hardware / firmware.	0x0630	0x06D3	Redundant modules	The redundant modules differ in terms of the hardware or firmware versions.	Make sure that the hardware or firmware versions of the redundant modules are identical: • Hardware version: Replace at least one module. • Firmware version: Perform a firmware update.

Maintenance events

A maintenance event is generated each time a maintenance requirement is identified. The MT LED lights up on the module.

Maintenance messages have no direct effect on the module function.

Table A-2 Maintenance messages, their meaning and possible remedies

Maintenance message	Channel error type (CET)	Extended channel error type (CET)	Assignment	Meaning / Cause	Remedy
Error in the retentive memory of the interface module	0x0640	0x06E0	Module	Fault detected in the memory block on the carrier module during operation.	Replace carrier module
Warning: Threshold for the allocation of dynamic memory exceeded	0x0640	0x06E2	Module	The internal memory block was overloaded. Example: Increased memory requirements caused by extreme overload over PROFINET (denial of service).	Contact the manufacturer.

PROFINET IO

Another source of diagnostic events is the PROFINET basic technology in use. It generates diagnostics messages containing coding that is already defined in the PROFINET IO Standard - Application Layer Service Definition V2.2.

The actual diagnostics scope used depends on the configuration and parameter assignment.

You can download the standard if needed on the Internet (http://www.profibus.com) from the home page of the PROFIBUS user organization.

A.2 Diagnostics of a shared device

The configuration prevents direct diagnostics of a shared device or shared module.

Recommendation for naming I/O components

When the I/O components are located in a different AS, you should note the following:

Specify the name for I/O components so that messages point directly to the shared components.

Diagnostics of a shared device

If commissioning is not possible or an I/O module (submodule) is not detected:

Configuration	Signaled by	Remedy
Shared device in one project	Consistency check in HW Config shows error (online)	Check and correct the configuration of the interface modules or the submodules for each IO controller.
Shared device in different projects	Station at an IO controller is not available during commissioning	