SIEMENS

Data sheet 3VL9300-8BC00

accessory for VL160X, VL160, VL250, masking frame for door cut-out IP40, for fixed/plug-in mounting

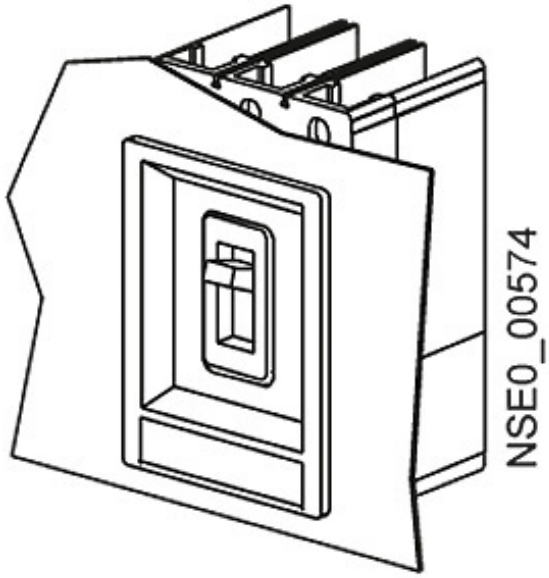

Model	
Product brand name	SENTRON
Accessories	
accessories	Accessories for...VL160, VL250
Mechanical Design	
Net weight	0.06 kg
Certificates	

Subject to change without notice
© Copyright Siemens

General Product Approval	EMC	Declaration of Conformity	Test Certificates	Shipping Approval	
Miscellaneous	C-Tick	EG-Konf.	Special Test Certificate	BUREAU VERITAS	PRS

Shipping Approval		other			
RINA	RMRS	Miscellaneous	Environmental Confirmations	Confirmation	Manufacturer Declaration

Further information

Information- and Downloadcenter (Catalogs, Brochures,…)
http://www.siemens.com/lowvoltage/catalogs

Industry Mall (Online ordering system)
https://mall.industry.siemens.com/mall/en/en/Catalog/product?mlfb=3VL9300-8BC00

Service&Support (Manuals, Certificates, Characteristics, FAQs,...)
https://support.industry.siemens.com/cs/ww/en/ps/3VL9300-8BC00

Image database (product images, 2D dimension drawings, 3D models, device circuit diagrams, ...)
http://www.automation.siemens.com/bilddb/cax_en.aspx?mlfb=3VL9300-8BC00

CAx-Online-Generator
http://www.siemens.com/cax

Tender specifications
http://www.siemens.com/specifications

Subject to change without notice
© Copyright Siemens

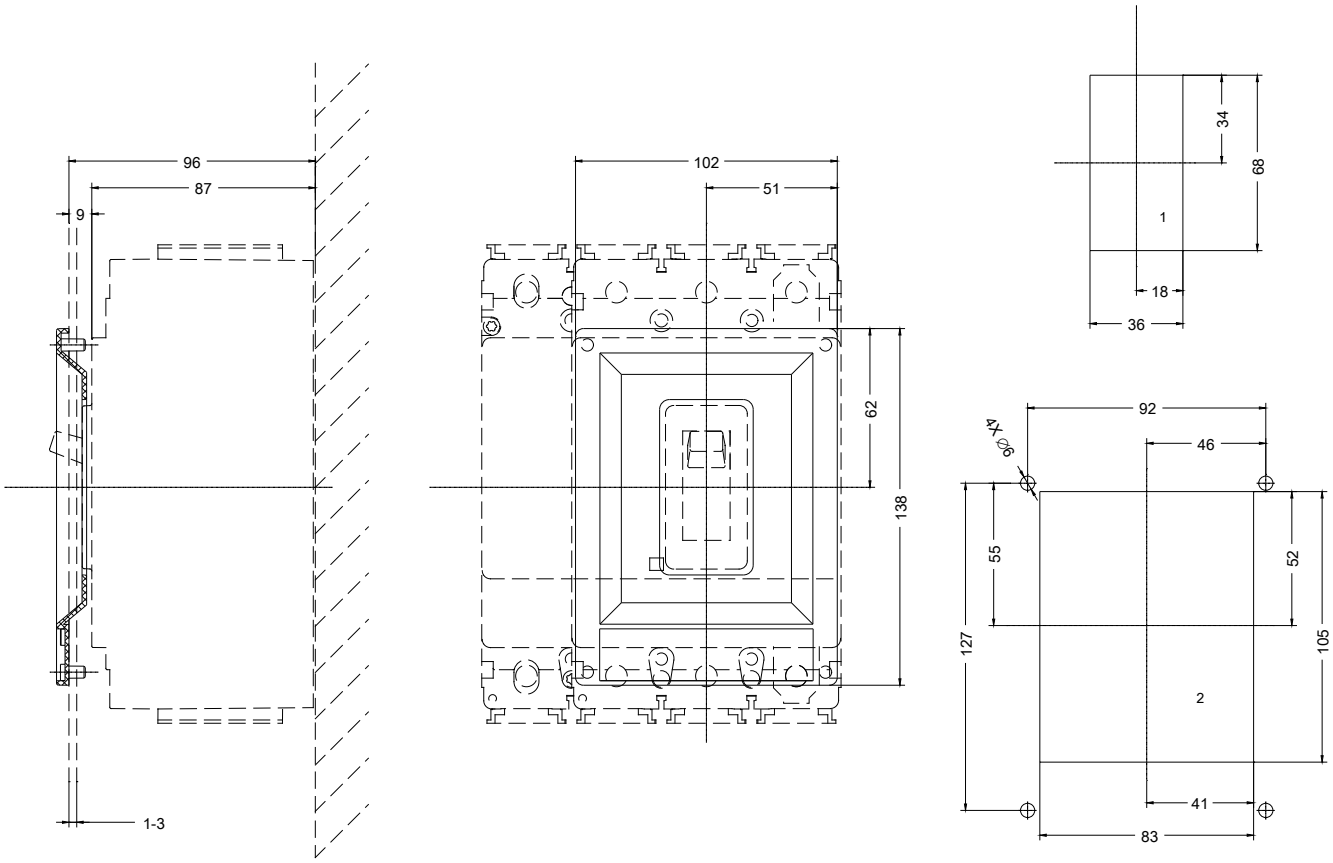

1 Türausschnitt Kipphebel ohne Blendrahmen

2 Türausschnitt Kipphebel mit Blendrahmen

Subject to change without notice
© Copyright Siemens