SIEMENS

Data sheet 3VA9137-0HA20



motor operator 110-230 V AC/110-250 V DC accessory for: 3VA51

Model	
product brand name	SENTRON
accessories	Motorized operating mechanism (MO)
General technical data	
make time / typical	0.8 s
break time / typical	0.8 s
Voltage	
type of voltage / of the operating voltage / for actuation	AC/DC
Rated control supply voltage Us at AC 50 Hz	
● minimum	110 V
● maximum	230 V
● Rated control supply voltage Us at AC 60 Hz /minimum	110 V
● Rated control supply voltage Us at AC 60 Hz / maximum	230 V
Rated control supply voltage Us with DC	
● minimum	110 V
● maximal	250 V
operating apparent power	250 VA
Mechanical Design	
height	70 mm
width	76 mm
depth	103 mm
connectable conductor cross-section / solid	
● minimum	1.5 mm²
● maximum	2.5 mm²
connectable conductor cross-section / finely stranded / with core end processing	
● minimum	1.5 mm²
● maximum	2.5 mm²
connectable conductor cross-section / stranded	
● minimum	1.5 mm²
● maximum	2.5 mm²
ambient temperature / during operation	
● minimum	-25 °C
● maximum	70 °C
ambient temperature / during storage	
● minimum	-40 °C
● maximum	80 °C
tightening torque	
● minimum	0.36 N·m

Subject to change without notice
© Copyright Siemens

• maximum	0.44 N·m
ambient temperature / during storage	
• minimum	-40 °C
• maximum	80 °C

Connections according IEC

stripped length	7 mm

Certificates

General Product Approval					EMV
CE EG-Konf.	UKCA	UL UL	Miscellaneous	EAC	RCM

Marine / Shipping	other			Dangerous Good	Environment
Lloyd's Register LRS	Confirmation	Miscellaneous	Miscellaneous	Transport Information	Environmental Confirmations

Further information

Information on the packaging
https://support.industry.siemens.com/cs/ww/en/view/109813875
Information- and Downloadcenter (Catalogs, Brochures,…)
http://www.siemens.com/lowvoltage/catalogs
Industry Mall (Online ordering system)
https://mall.industry.siemens.com/mall/en/en/Catalog/product?mlfb=3VA9137-0HA20
Service&Support (Manuals, Certificates, Characteristics, FAQs,...)
https://support.industry.siemens.com/cs/ww/en/ps/3VA9137-0HA20
Image database (product images, 2D dimension drawings, 3D models, device circuit diagrams, ...)
http://www.automation.siemens.com/bilddb/cax_en.aspx?mlfb=3VA9137-0HA20
CAx-Online-Generator
http://www.siemens.com/cax
Tender specifications
http://www.siemens.com/specifications

Subject to change without notice
© Copyright Siemens

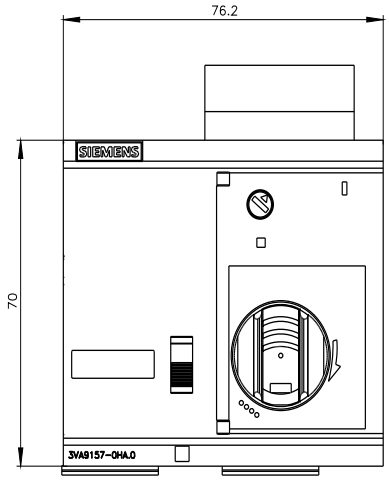

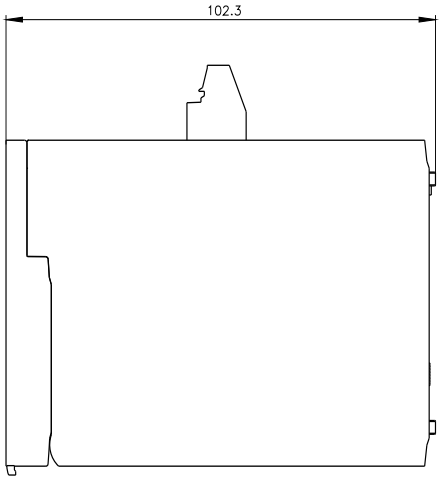

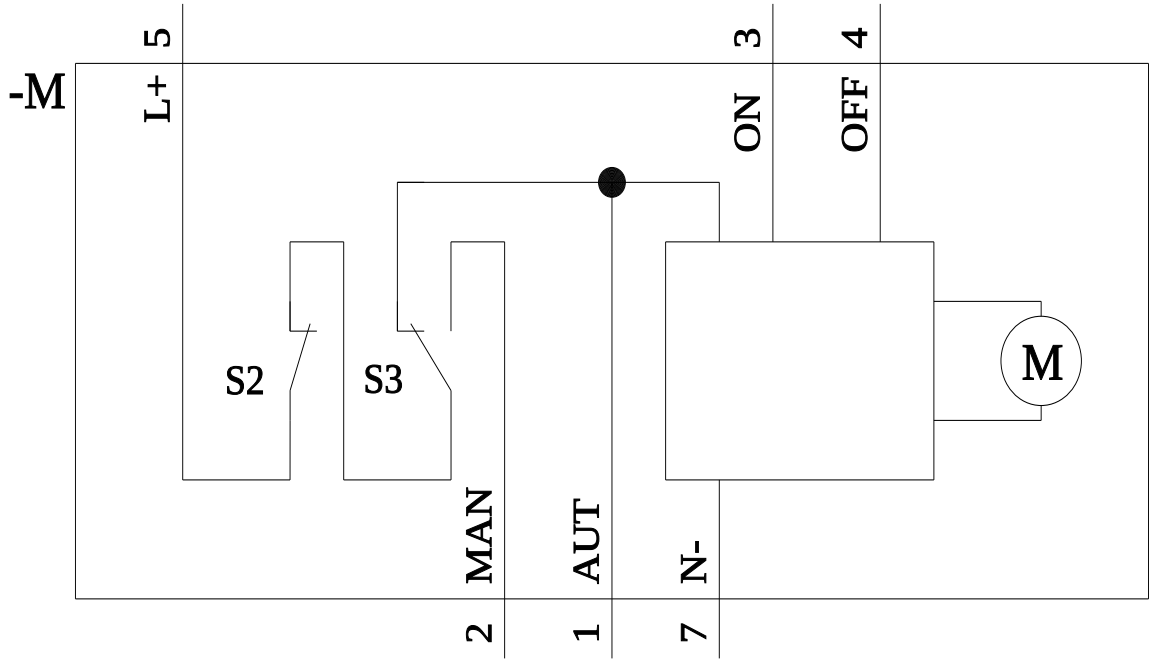

last modified: 8/15/2023

Subject to change without notice
© Copyright Siemens

Subject to change without notice
© Copyright Siemens