SIEMENS

SITOP power supply

SITOP expansion modules

Equipment Manual

SITOP RED1200 redundancy module
6EP4346-7RB00-0AX0
SITOP RED1200 redundancy module
6EP4347-7RB00-0AX0
SITOP RED1200 redundancy module
6EP4348-7RB00-0AX0
SITOP PSE202U redundancy module
6EP1961-3BA21
SITOP PSE202U redundancy module
6EP1962-2BA00
SITOP PSE202U redundancy module
6EP1964-2BA00
SITOP BUF1200 buffer module
6EP4231-7HB00-0AX0
SITOP PSE201U buffer module
6EP1961-3BA01
Inrush current limiter Logo! ICL230
6EP4683-6LB00-0AY0
SITOP inrush current limiter
6EP1967-2AA00

SITOP RED1200 Ex redundancy module
6EP4347-7RC00-0AX0
SITOP BUF1200 Ex buffer module
6EP4231-7HC00-0AX0

09.2022
A5E36605235-2-76

Overview
Safety instructions 1
Description, device design, dimension drawing 2
Mounting/removal 3
Mounting position, mounting clearances 4
Installation 5
Technical data 6
Safety, approvals, EMC 7
Ambient conditions 8
Applications 9
Environment 10
Service & Support 11

Legal information

Warning notice system

This manual contains notices you have to observe in order to ensure your personal safety, as well as to prevent damage to property. The notices referring to your personal safety are highlighted in the manual by a safety alert symbol, notices referring only to property damage have no safety alert symbol. These notices shown below are graded according to the degree of danger.

⚠ DANGER

indicates that death or severe personal injury **will** result if proper precautions are not taken.

⚠ WARNING

indicates that death or severe personal injury **may** result if proper precautions are not taken.

⚠ CAUTION

indicates that minor personal injury can result if proper precautions are not taken.

NOTICE

indicates that property damage can result if proper precautions are not taken.

If more than one degree of danger is present, the warning notice representing the highest degree of danger will be used. A notice warning of injury to persons with a safety alert symbol may also include a warning relating to property damage.

Qualified Personnel

The product/system described in this documentation may be operated only by **personnel qualified** for the specific task in accordance with the relevant documentation, in particular its warning notices and safety instructions. Qualified personnel are those who, based on their training and experience, are capable of identifying risks and avoiding potential hazards when working with these products/systems.

Proper use of Siemens products

Note the following:

⚠ WARNING

Siemens products may only be used for the applications described in the catalog and in the relevant technical documentation. If products and components from other manufacturers are used, these must be recommended or approved by Siemens. Proper transport, storage, installation, assembly, commissioning, operation and maintenance are required to ensure that the products operate safely and without any problems. The permissible ambient conditions must be complied with. The information in the relevant documentation must be observed.

Trademarks

All names identified by ® are registered trademarks of Siemens AG. The remaining trademarks in this publication may be trademarks whose use by third parties for their own purposes could violate the rights of the owner.

Disclaimer of Liability

We have reviewed the contents of this publication to ensure consistency with the hardware and software described. Since variance cannot be precluded entirely, we cannot guarantee full consistency. However, the information in this publication is reviewed regularly and any necessary corrections are included in subsequent editions.

Siemens AG
Digital Industries
Postfach 48 48
90026 NÜRNBERG
GERMANY

A5E36605235-2-76
Ⓟ 09/2022 Subject to change

Copyright © Siemens AG 2022.
All rights reserved

Overview

The quality of a power supply alone cannot guarantee a disturbance-free 24 V. Various risks, such as power failures, extreme line voltage fluctuations etc., can disturb plant or system operation and result in significant costs. Various SITOP expansion modules facilitate the completely flexible expansion of SITOP power supplies, and offer reliable protection against the widest range of risks. The following expansion modules are available to increase system availability.

SITOP RED1200 redundancy modules



The key benefits of this product include:

- Can be used for power supplies with output voltages 12 V up to 48 V
- High power supply reliability as a result of the redundant structure
- Reliable supply even if one power supply unit fails
- Compact redundancy modules for power supplies up to 40 A
- Simple commissioning using a push-in connection system
- Quick and simple rail mounting

SITOP PSE202U redundancy modules



The key benefits of this product include:

- High 24 V supply reliability as a result of the redundant structure
- Reliable supply even if one power supply unit fails
- Compact redundancy modules for power supplies up to 40 A
- 24 V/NEC Class 2 redundancy module with 100 VA limit
- Diagnostics signal using LED and signaling contacts
- Adjustable activation threshold for LED and signaling contacts
- Quick and simple rail mounting

Buffer module SITOP BUF1200



The key benefits of this product include:

- Only 2 cables are required to connect to the basic module
- Protection against brief power failures
- 300 ms up to max. 240 s buffer time depending on the load current
- The buffer time can be extended many times by connecting units in parallel
- Electrolytic capacitors are used for maintenance-free operation
- Diagnostic message via LED
- Quick and simple rail mounting
- Simple commissioning using a push-in connection system

SITOP PSE201U buffer module



The key benefits of this product include:

- Only 2 cables are required to connect to the basic module
- Protection against brief power failures
- 100 ms up to max. 10 s buffer time depending on the load current
- The buffer time can be extended many times by connecting units in parallel
- Electrolytic capacitors are used for maintenance-free operation
- Quick and simple rail mounting

Inrush current limiter Logo! ICL230



The key benefits of this product include:

- Inrush currents are reliably reduced
- Can be used on 1-phase AC line supplies with rated voltages of 100 V, 120 V or 230 V
- Can be used on 2-phase AC line supplies with a rated voltage of 208 V
- Minimized power loss by bypassing the limiting resistor in operation
- Quick and simple rail mounting

SITOP inrush current limiter



The key benefits of this product include:

- Inrush currents are reliably reduced
- Can be used on 1-phase AC line supplies with rated voltages of 100 V, 120 V or 230 V
- Can be used on 2 and 3-phase AC line supplies with rated voltages of 208 V to 480 V
- Minimized power loss by bypassing the limiting resistor in operation
- Quick and simple rail mounting

Ordering data

The following device versions are available:

Expansion modules	
Type	**Order number**
Redundancy module SITOP RED1200 input/output 12 - 48 V DC/20 A	6EP4346-7RB00-0AX0
Redundancy module SITOP RED1200 input/output 12 - 48 V DC/40 A	6EP4347-7RB00-0AX0
Redundancy module SITOP RED1200 input/output 12 - 48 V DC/80 A	6EP4348-7RB00-0AX0
Redundancy module SITOP PSE202U input/output 24 V DC/40 A	6EP1961-3BA21
Redundancy module SITOP PSE202U NEC CLASS 2 input/output 24 V DC/4 A	6EP1962-2BA00
Redundancy module SITOP PSE202U input/output 24 V DC/10 A	6EP1964-2BA00
Buffer module SITOP BUF1200	6EP4231-7HB00-0AX0
Buffer module SITOP PSE201U	6EP1961-3BA01
Inrush current limiter Logo! ICL230	6EP4683-6LB00-0AY0
Inrush current limiter SITOP	6EP1967-2AA00

Expansion modules Ex	
Type	**Order number**
Redundancy module SITOP RED1200 Ex input/output 12 - 48 V DC/40 A	6EP4347-7RC00-0AX0
Buffer module SITOP BUF1200 Ex	6EP4231-7HC00-0AX0

Accessories for SITOP RED1200	
Type	**Order number**
Reference labeling plate (160 plates)	6ES7193-6LF30-0AW0

Table of contents

Overview ... **3**

1 Safety instructions ... **15**

1.1 General safety instructions ... 15

1.2 Safety instructions for hazardous zones ... 16
1.2.1 Redundancy module SITOP RED1200 Ex (6EP4347-7RC00-0AX0) ... 16
1.2.2 Buffer module SITOP BUF1200 Ex (6EP4231-7HC00-0AX0) ... 16

2 Description, device design, dimension drawing ... **17**

2.1 Device description ... 17
2.1.1 Redundancy modules ... 17
2.1.1.1 SITOP RED1200 ... 17
2.1.1.2 SITOP PSE202U ... 18
2.1.2 Buffer modules ... 21
2.1.2.1 SITOP BUF1200 ... 21
2.1.2.2 SITOP PSE201U ... 22
2.1.3 Inrush current limiter ... 23
2.1.3.1 Logo! ICL230 ... 23
2.1.3.2 SITOP inrush current limiter ... 24

2.2 Connections and terminal designation ... 25
2.2.1 Redundancy modules ... 25
2.2.1.1 SITOP RED1200 ... 25
2.2.1.2 SITOP PSE202U ... 26
2.2.2 Buffer modules ... 27
2.2.2.1 SITOP BUF1200 ... 27
2.2.2.2 SITOP PSE201U ... 28
2.2.3 Inrush current limiter ... 29
2.2.3.1 Logo! ICL230 ... 29
2.2.3.2 SITOP inrush current limiter ... 30

2.3 Potentiometer ... 31
2.3.1 SITOP PSE202U redundancy modules ... 31

2.4 Status displays and signaling ... 32
2.4.1 SITOP PSE202U redundancy modules ... 32
2.4.2 Buffer modules ... 33
2.4.2.1 SITOP BUF1200 ... 33
2.4.2.2 SITOP PSE201U ... 33
2.4.3 Inrush current limiter ... 34
2.4.3.1 Logo! ICL230 ... 34
2.4.3.2 SITOP inrush current limiter ... 35

2.5 Dimensions and weight ... 36
2.5.1 Redundancy modules ... 36
2.5.1.1 SITOP RED1200 ... 36
2.5.1.2 SITOP PSE202U ... 38
2.5.2 Buffer modules ... 40
2.5.2.1 SITOP BUF1200 ... 40
2.5.2.2 SITOP PSE201U ... 41
2.5.3 Inrush current limiter ... 42
2.5.3.1 Logo! ICL230 ... 42
2.5.3.2 SITOP inrush current limiter ... 43

3 Mounting/removal ... 45

3.1 Redundancy modules ... 45
3.1.1 SITOP RED1200 ... 45
3.1.2 6EP1961-3BA21 ... 47
3.1.3 6EP1962-2BA00 and 6EP1964-2BA00 ... 48

3.2 Buffer modules ... 49
3.2.1 SITOP BUF1200 ... 49
3.2.2 SITOP PSE201U ... 50

3.3 Inrush current limiter ... 51
3.3.1 Logo! ICL230 ... 51
3.3.2 SITOP inrush current limiter ... 53

4 Mounting position, mounting clearances ... 55

4.1 Standard mounting position ... 55

4.2 Other mounting positions ... 59
4.2.1 Other mounting positions ... 59
4.2.2 SITOP RED1200 ... 59
4.2.2.1 6EP4346-7RB00-0AX0 ... 59
4.2.2.2 6EP4347-7RB00-0AX0 and 6EP4347-7RC00-0AX0 ... 62
4.2.2.3 6EP4348-7RB00-0AX0 ... 64
4.2.3 SITOP PSE202U ... 66
4.2.3.1 6EP1961-3BA21 ... 66
4.2.3.2 6EP1962-2BA00 ... 68
4.2.3.3 6EP1964-2BA00 ... 70
4.2.4 Buffer modules ... 72
4.2.4.1 SITOP BUF1200 (6EP4231-7HB00-0AX0 and 6EP4231-7HC00-0AX0) ... 72
4.2.4.2 SITOP PSE201U (6EP1961-3BA01) ... 72
4.2.5 Inrush current limiter ... 72

5 Installation ... 73

5.1 Input connections ... 74
5.1.1 Redundancy modules ... 74
5.1.1.1 SITOP RED1200 ... 74
5.1.1.2 SITOP PSE202U ... 75
5.1.2 Buffer modules ... 76
5.1.2.1 SITOP BUF1200 ... 76
5.1.2.2 SITOP PSE201U ... 76
5.1.3 Inrush current limiter ... 77
5.1.3.1 Logo! ICL230 ... 77
5.1.3.2 SITOP inrush current limiter ... 77

5.2 Output connections 79
5.2.1 Redundancy modules 79
5.2.1.1 SITOP RED1200 79
5.2.1.2 SITOP PSE202U 83
5.2.2 Buffer modules 84
5.2.2.1 SITOP BUF1200 84
5.2.2.2 SITOP PSE201U 84
5.2.3 Inrush current limiter 85
5.2.3.1 Logo! ICL230 85
5.2.3.2 SITOP inrush current limiter 85

6 Technical data 87

6.1 Input 87
6.1.1 Redundancy modules 87
6.1.2 Buffer modules 87
6.1.3 Inrush current limiter 88

6.2 Output 89
6.2.1 Redundancy modules 89
6.2.2 Buffer modules 89
6.2.3 Inrush current limiter 91

6.3 Protection and monitoring 92
6.3.1 Redundancy modules 92
6.3.2 Buffer modules 92
6.3.3 Inrush current limiter 92

6.4 Mechanical system 93
6.4.1 Redundancy modules 93
6.4.2 Buffer modules 94
6.4.3 Inrush current limiter 95

6.5 Accessories 96
6.5.1 Redundancy modules 96

6.6 Dimension drawing 97
6.6.1 Redundancy modules 97
6.6.2 Buffer modules 97
6.6.3 Inrush current limiter 98

7 Safety, approvals, EMC 99

7.1 Safety 99

7.2 Approvals 100
7.2.1 SITOP RED1200 100
7.2.2 SITOP PSE202U 100
7.2.3 Buffer modules 101
7.2.4 Inrush current limiter 101

7.3 EMC 102
7.3.1 SITOP RED1200 102
7.3.2 PSE202U 102
7.3.3 Buffer modules 103
7.3.4 Inrush current limiter 103

8 Ambient conditions 105
9 Applications 107
9.1 Redundancy circuit for increased system availability 107
9.2 Design of 24 V load feeders with power limiting according to NEC class2 110
9.3 Protection against short-time voltage dips 111
10 Environment 113
11 Service & Support 115

Safety instructions

1

1.1 General safety instructions

⚠ WARNING

Correct handling of the devices

When operating electrical devices, it is inevitable that certain components will carry dangerous voltages.

Therefore, failure to handle the units properly can result in death or serious physical injury as well as extensive property damage.

Only appropriately qualified personnel may work on or in the vicinity of this equipment.

Perfect, safe, and reliable operation of this equipment is dependent on proper transportation, storage, installation and mounting.

Before installation or maintenance work can begin, the system's main switch must be switched off and measures taken to prevent it being switched on again.

If this instruction is not observed, touching live parts can result in death or serious injury.

1.2 Safety instructions for hazardous zones

It is only permissible that the devices listed below are used in hazardous zones.

1.2.1 Redundancy module SITOP RED1200 Ex (6EP4347-7RC00-0AX0)

The device complies with ATEX directive 2014/34/EU: EN IEC 60079-0; EN 60079-7;
UKSI 2016: 1107: BS EN IEC 60079-0; BS EN 60079-7

UL: Suitable for Ex applications in CLASS I, DIVISION 2, GROUPS A, B, C and D - or in non-hazardous zones only.

⚠ WARNING

EXPLOSION HAZARD – DO NOT CONNECT OR DISCONNECT EQUIPMENT UNLESS POWER HAS BEEN SWITCHED OFF OR THE AREA IS KNOWN TO BE NON-HAZARDOUS

⚠ WARNING

EXPLOSION HAZARD – SUBSTITUTION OF COMPONENTS MAY IMPAIR SUITABILITY FOR CLASS I, DIVISION 2

1.2.2 Buffer module SITOP BUF1200 Ex (6EP4231-7HC00-0AX0)

The device complies with ATEX directive 2014/34/EU: EN IEC 60079-0; EN 60079-7;
UKSI 2016: 1107: BS EN IEC 60079-0; BS EN 60079-7

UL: Suitable for Ex applications in CLASS I, DIVISION 2, GROUPS A, B, C and D - or in non-hazardous zones only.

⚠ WARNING

EXPLOSION HAZARD – DO NOT CONNECT OR DISCONNECT EQUIPMENT UNLESS POWER HAS BEEN SWITCHED OFF OR THE AREA IS KNOWN TO BE NON-HAZARDOUS

⚠ WARNING

EXPLOSION HAZARD – SUBSTITUTION OF COMPONENTS MAY IMPAIR SUITABILITY FOR CLASS I, DIVISION 2

Description, device design, dimension drawing

2

2.1 Device description

2.1.1 Redundancy modules

2.1.1.1 SITOP RED1200

Redundancy modules SITOP RED1200 are the optimal addition to all 12 - 48 V power supplies to provide additional protection against failure of the 12 - 48 V supply. The redundancy module continuously monitors the feeding power supplies, and when one device fails, the other one automatically takes over the complete 12 - 48 V supply.

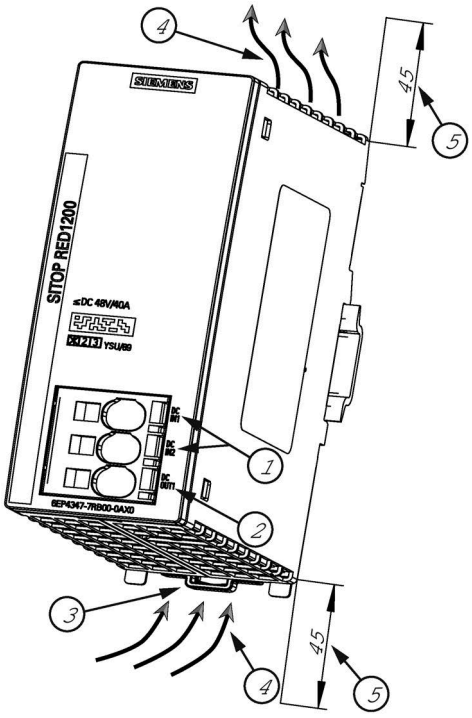

① 12 - 48 V input – supply voltage from power supplies 1 and 2
② 12 - 48 V output – supply voltage to the load and 0 V connection to the internal supply
③ Mounting rail slider
④ Natural convection
⑤ Clearance above/below

Figure 2-1 Design

2.1.1.2 SITOP PSE202U

Redundancy modules SITOP PSE202U are the optimum addition to all 24 V power supplies to provide additional protection against failure of the 24 V supply. The redundancy module continuously monitors the feeding power supplies, and when one device fails, the other one automatically takes over the complete 24 V supply.

The failure of a 24 V power supply is signaled using an LED and a relay contact. The response threshold for this signal can be set between 20 V and 25 V using a potentiometer on the redundancy module. (when delivered, 20 V)

With redundancy module NEC class2, a redundant 24 V power supply can be implemented, where the output power is limited to 100 VA.

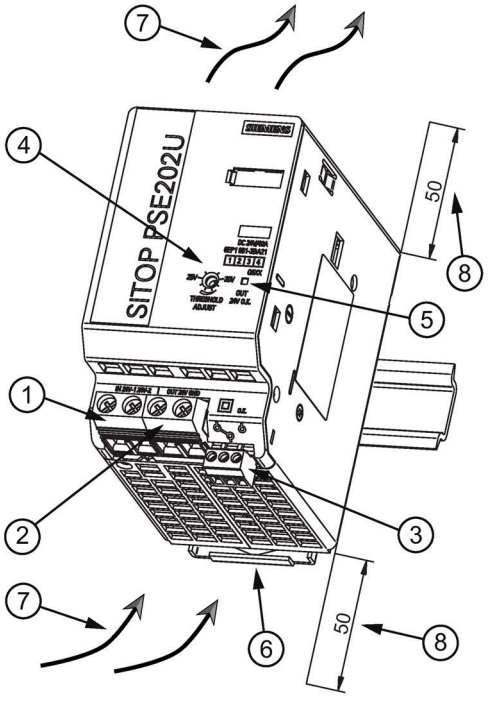

① 24 V input – supply voltage from power supplies 1 and 2
② 24 V output – supply voltage to the load and 0 V connection to the internal supply
③ Floating relay contact (changeover contact)
④ 20 - 25 V potentiometer
⑤ Indicator light
⑥ Mounting rail slider
⑦ Natural convection
⑧ Clearance above/below

Figure 2-2 Design 6EP1961-3BA21

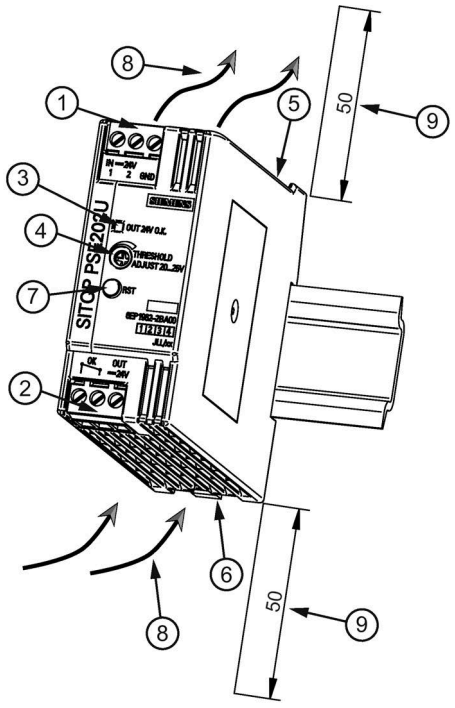

① 24 V input – supply voltage from power supplies 1 and 2 as well as 0 V connection to the internal supply
② 24 V output – supply voltage to the load and floating relay contact
③ Indicator light (LED)
④ Potentiometer for setting the signal threshold
⑤ Latch for manual unlocking
⑥ Lug for unlocking using a screwdriver
⑦ RST button to switch on again
⑧ Natural convection
⑨ Clearance above/below

Figure 2-3 Design 6EP1962-2BA00

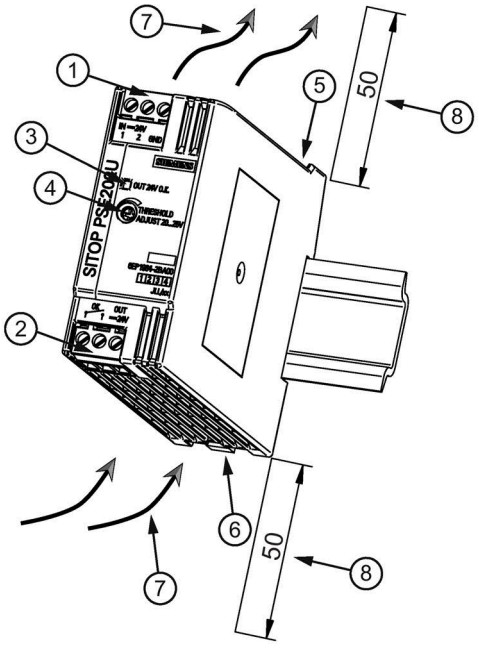

① 24 V input – supply voltage from power supplies 1 and 2 as well as 0 V connection to the internal supply
② 24 V output – supply voltage to the load and floating relay contact
③ Indicator light (LED)
④ Potentiometer for setting the signal threshold
⑤ Latch for manual unlocking
⑥ Lug for unlocking using a screwdriver
⑦ Natural convection
⑧ Clearance above/below

Figure 2-4 Design 6EP1964-2BA00

2.1.2 Buffer modules

2.1.2.1 SITOP BUF1200

The buffer module SITOP BUF1200 buffers brief power failures in the seconds range and can be used with all SITOP smart and SITOP modular 24 V power supplies. The buffer module uses maintenance-free capacitors as energy storage devices and automatically supplies 24 V in the event that the power supply voltage fails.

The buffer module is simply connected in parallel to the power supply output.

Several buffer modules can be connected in parallel to extend the buffer time.

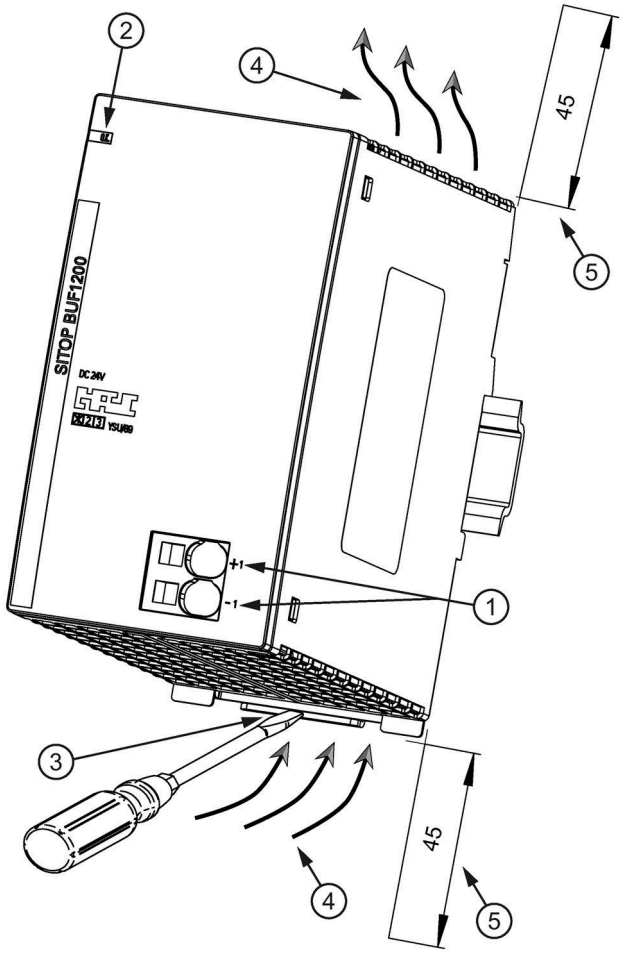

① 24 V DC supply voltage
② Indicator light (O.K.)
③ Mounting rail slider
④ Natural convection
⑤ Clearance above/below

Figure 2-5 Design

2.1.2.2 SITOP PSE201U

The SITOP PSE201U buffer module buffers brief power failures in the seconds range and can be used with all SITOP smart and SITOP modular 24 V power supplies. The buffer module uses maintenance-free capacitors as energy storage devices and automatically supplies 24 V in the event that the power supply voltage fails.

The buffer module is simply connected in parallel to the power supply output.

To increase the buffer time (max. 10 s), several buffer modules can be connected in parallel.

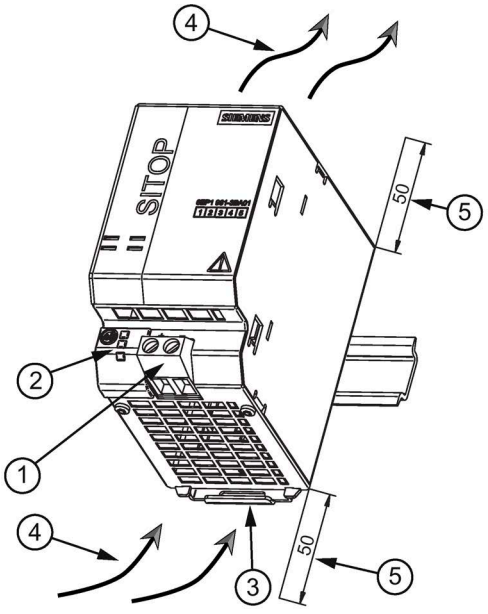

① 24 V DC supply voltage
② Indicator light (24 V OK)
③ Mounting rail slider
④ Natural convection
⑤ Clearance above/below

Figure 2-6 Design

2.1.3 Inrush current limiter

2.1.3.1 Logo! ICL230

The Logo! ICL230 inrush current limiter is used to reliably reduce inrush currents, e.g. caused by LEDs, transformers or switched-mode power supplies as a result of the rectifier circuit at the input with capacitor charging.

It is used for 1-phase AC line supplies with 100 V, 120 V or 230 V or for 2-phase line supplies with 208 V rated voltage on the line side, upstream of transformers, power supplies or LEDs. Using the integrated fixed resistor, it limits the inrush current to approx. 10 A at 230 V. In steady-state operation, the limiting resistor is bypassed after approx. 60 ms, therefore minimizing the associated power loss.

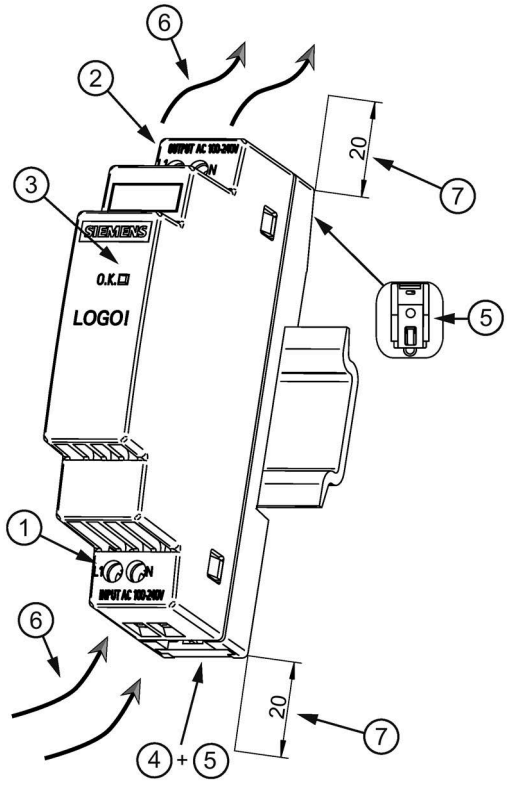

① AC input
② AC output
③ Indicator light
④ Mounting rail slider
⑤ Mounting lug to remove
⑥ Convection
⑦ Clearance above/below

Figure 2-7 Design

2.1.3.2 SITOP inrush current limiter

The SITOP inrush current limiter is used to reliably reduce inrush currents, e.g. caused by transformers or switched-mode power supplies as a result of the rectifier circuit at the input with capacitor charging.

It is used for 1-phase AC line supplies with 100 V, 120 V or 230 V or for 2 and 3- phase line supplies with 208 V to 480 V line voltage on the line side, upstream of transformers or power supplies. Using the integrated fixed resistor, it limits the inrush current to e.g. < 10 A at 230 V. In steady-state operation, the limiting resistor is bypassed after approx. 120 ms, therefore minimizing the associated power loss.

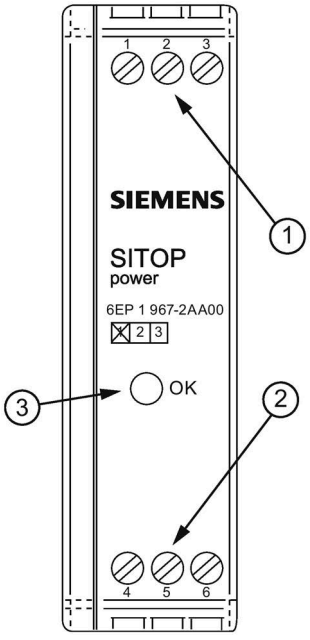

① Input
② Output
③ Indicator light

Figure 2-8 Design

2.2 Connections and terminal designation

2.2.1 Redundancy modules

2.2.1.1 SITOP RED1200

Note

Use suitable copper cables that are designed for operating temperatures of at least 90 °C (UL 508: 60/75 °C).

Connections and terminal designations of redundancy module 6EP4346-7RB00-0AX0	
① Input 12 - 48 V supply voltage of power supplies 1 and 2 "**DC IN1**", "**DC IN2**"	one spring-loaded terminal each
② Output 12 - 48 V supply voltage to the load / "**DC OUT1**"	one spring-loaded terminal each

	① + ②
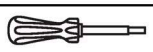	0,8 x 5,5
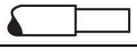	1 x 0,2 - 10 mm²
	1 x 0,2 - 10 mm²
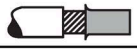	1 x 0,25 - 6 mm²
AWG	24 - 8
	13 - 15 mm

Figure 2-9 Terminal data 6EP4346-7RB00-0AX0

Connections and terminal designations of the redundancy modules 6EP4347-7RB00-0AX0, 6EP4348-7RB00-0AX0 and 6EP4347-7RC00-0AX0	
① Input 12 - 48 V supply voltage of power supplies 1 and 2 "**DC IN1**", "**DC IN2**"	one spring-loaded terminal each
② Output 12 - 48 V supply voltage to the load / "**DC OUT1**"	one spring-loaded terminal each

	① + ②
	0,8 x 5,5
	1 x 0,75 - 16 mm²
	1 x 0,75 - 25 mm²
	1 x 0,25 - 16 mm²
AWG	18 - 4
	18 - 20 mm

Figure 2-10 Terminal data 6EP4347-7RB00-0AX0, 6EP4348-7RB00-0AX0 and 6EP4347-7RC00-0AX0

2.2.1.2 SITOP PSE202U

Note

Use suitable copper cables that are designed for operating temperatures of at least 60/75 °C. The cables must be certified for at least 90 °C for the 6EP1964-2BA00 device.

Connections and terminal designations of redundancy module 6EP1961-3BA21	
① Input 24 V supply voltage of power supplies 1 and 2 "**IN 24 V-1**", "**IN 24 V-2**"	One screw terminal each
② Output 24 V supply voltage to the load / "**OUT 24 V**" 0 V connection to the internal supply "**GND**"	One screw terminal each
③ Floating relay contact (changeover contact) "**OK**"	Plug-in terminal 3 screw terminals

	① + ②	③	④
	1 x 5,5 / PZ1 / PH1	0,6 x 3,5 / PZ1 / PH1	0,6 x 3 / PZ1 / PH1 max. ∅ 3,5 mm
	1 x 0,5 - 16 mm²	1 x 0,2 - 2,5 mm²	-
	1 x 0,5 - 16 mm²	1 x 0,2 - 2,5 mm²	-
	1 x 2,5 - 16 mm² *2)	1 x 0,25 - 2,5 mm²	-
AWG	26 - 6	24 - 12	-
Nm	1,2 - 1,5 Nm	0,5 - 0,6 Nm	0,04 Nm *1)
	12 mm	7 mm	-

*1) Do not subject the end stop to higher loads

*2) 16 mm² for square crimping, otherwise 10 mm²

Figure 2-11 Terminal data 6EP1961-3BA21

Connections and terminal designations of the redundancy modules 6EP1962-2BA00 and 6EP1964-2BA00	
① Input 24 V supply voltage from power supplies 1 and 2 "**IN 24V-1**", "**IN 24V-2**" 0 V connection to the internal supply "**GND**"	Plug-in terminal each with a screw terminal
② Output 24 V supply voltage to the load "**OUT 24 V**" floating relay contact "**O.K.**"	Plug-in terminal with one screw terminal (output) and two screw terminals (relay contact)

	① + ②	④
	0,6 x 3,5 / PZ1 / PH1	0,6 x 3 / PZ1 / PH1 max. ∅ 3,5 mm
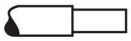	1 x 0,5 - 2,5 mm²	-
	1 x 0,5 - 2,5 mm²	-
	1 x 0,5 - 2,5 mm²	-
AWG	28 - 12	-
Nm	0,5 Nm	0,04 Nm *1)
	7 - 8 mm	-

*1) Do not subject the end stop to higher loads

Figure 2-12 Terminal data 6EP1962-2BA00 and 6EP1964-2BA00

2.2.2 Buffer modules

2.2.2.1 SITOP BUF1200

Note

Use copper wire certified for at least 75 °C.

Connections and terminal designations	
① 24 V DC supply voltage "**+**", "**-**"	1 spring-loaded terminal each

	①
	0,8 x 5,5
	1 x 0,75 - 16 mm²
	1 x 0,75 - 25 mm²
	1 x 0,25 - 16 mm²
AWG	18 - 4
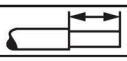	18 - 20 mm

Figure 2-13 Terminal data

2.2.2.2 SITOP PSE201U

Note

Use copper wire certified for at least 75 °C.

Connections and terminal designations	
① 24 V DC supply voltage "**+**", "**-**"	1 screw terminal each

	①
	1,0 x 5,5 / PZ1 / PH1
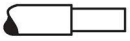	1 x 0,5 - 16 mm²
	1 x 0,5 - 16 mm²
	1 x 2,5 - 16 mm²*1)
AWG	26 - 6
Nm	1,2 - 1,5 Nm
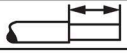	12 mm

*1) 16 mm² for square crimping, otherwise 10 mm²

Figure 2-14 Terminal data

2.2.3 Inrush current limiter

2.2.3.1 Logo! ICL230

Note

Use copper cable certified for use at 90 °C.

Connections and terminal designations	
① Input "**L1**", "**N**"	One screw terminal each
② Output "**L1**", "**N**"	One screw terminal each

	① + ②
	0,5 x 3
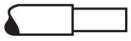	1 x 0,14 - 2,5 mm²
	1 x 0,14 - 2,5 mm²
	1 x 0,25 - 2,5 mm²
AWG	26 - 14
Nm	0,5 - 0,6 Nm
	8 mm

Figure 2-15 Terminal data

2.2.3.2 SITOP inrush current limiter

Note

Use suitable copper cables that are designed for operating temperatures of at least 60/75 °C.

Connections and terminal designations	
① Input "**L1**", "**N**"	One screw terminal each
② Output "**L1**", "**N**"	One screw terminal each

	① + ②
	0,6 x 3,5 / PZ1 / PH1
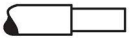	1 x 0,5 - 2,5 mm²
	1 x 0,5 - 2,5 mm²
	1 x 0,5 - 2,5 mm²
AWG	22 - 12
Nm	0,5 - 0,7 Nm
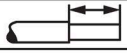	7 - 8 mm

Figure 2-16 Terminal data

2.3 Potentiometer

2.3.1 SITOP PSE202U redundancy modules

The potentiometer ④ at the front of the device is used to set the response threshold of the LED signal and the signaling contact; it can be set in the range from 20 V up to 25 V. (when delivered, 20 V)

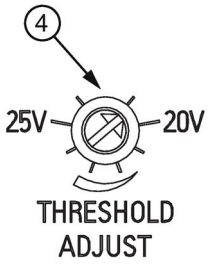

Figure 2-17 Potentiometer 6EP1961-3BA21

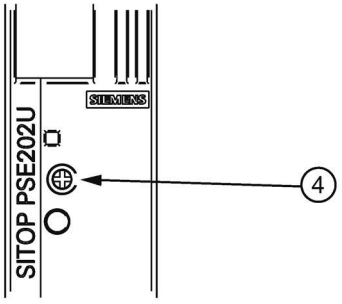

Figure 2-18 Potentiometer 6EP196x-2BA00 (example 6EP1962-2BA00)

Note

It is only permissible to use an insulated screwdriver when actuating the potentiometer.

For notes on actuating the potentiometer (screwdriver, torque), see Figure 2-11 Terminal data 6EP1961-3BA21 (Page 26) and Figure 2-12 Terminal data 6EP1962-2BA00 and 6EP1964-2BA00 (Page 27).

2.4 Status displays and signaling

2.4.1 SITOP PSE202U redundancy modules

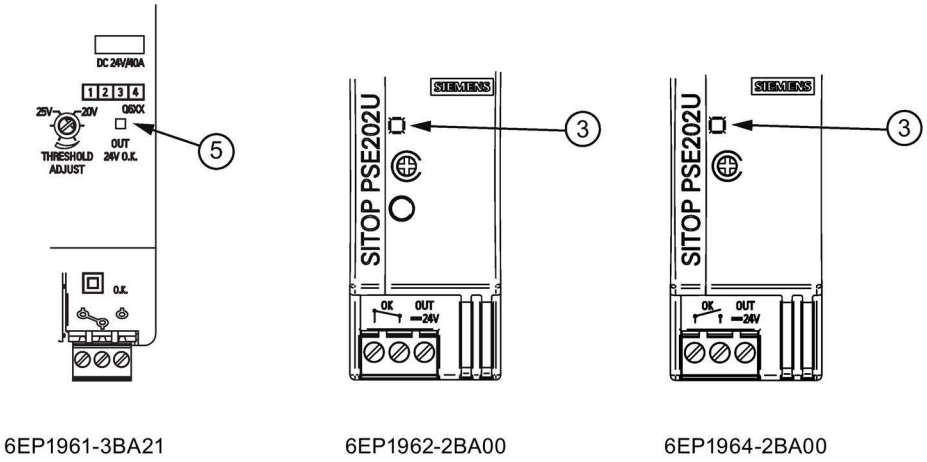

6EP1961-3BA21 6EP1962-2BA00 6EP1964-2BA00

Figure 2-19 Operating display and signaling

Operating display and signaling	6EP1961-3BA21
LED ⑤ lights up green	Both input voltages > switching threshold
LED ⑤ lights up red	At least one input voltage < switching threshold
O.K. (floating relay contact)	O.K. if both input voltages are > switching threshold (contact rating (SELV (ES1) must be maintained) 8 A/AC 240 V, 24 V DC)

Operating display and signaling	6EP1962-2BA00	6EP1964-2BA00
LED ③ lights up green	Both input voltages > switching threshold	Both input voltages > switching threshold
LED ③ lights up red	At least one input voltage < switching threshold or the output is switched off	At least one input voltage < switching threshold
O.K. (floating relay contact)	Contact is closed if one or both input voltages is/are < the switching threshold, or if the output is switched off. (contact rating (SELV (ES1) must be maintained) 6 A/AC 42 V, 30 V DC, however 100 VA max.)	Contact is opened if one or both input voltages is/are < the switching threshold. (contact rating (SELV (ES1) must be maintained) 6 A/AC 42 V, 30 V DC)

2.4.2 Buffer modules

2.4.2.1 SITOP BUF1200

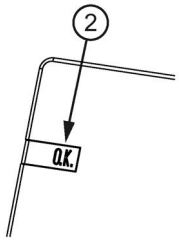

Figure 2-20 Signaling

Status indicator	6EP4231-7HB00-0AX0 and 6EP4231-7HC00-0AX0
LED ② "O.K." lights up green	Buffer module fully charged
LED ② "O.K." lights up green flashing (0.5 Hz)	Buffer module is being charged, buffer mode possible
LED ② "O.K." lights up green flashing (2 Hz)	Buffer module being charged, charge state insufficient for buffer operation or fault

2.4.2.2 SITOP PSE201U

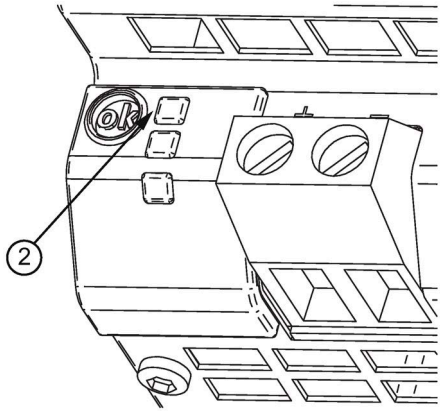

Figure 2-21 Status indicator

Status indicator	6EP1961-3BA01
LED ② lights up green	Supply voltage > 20.5 V
LED ② off	Supply voltage < 20.5 V

2.4.3 Inrush current limiter

2.4.3.1 Logo! ICL230

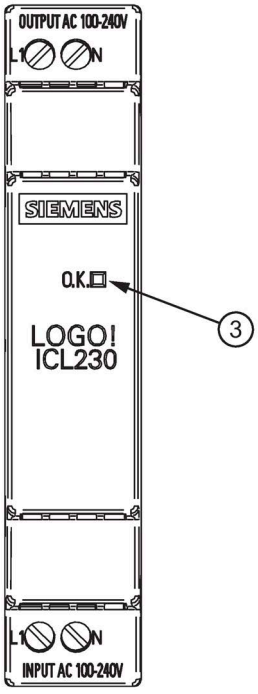

Figure 2-22 Status indicator

Status indicator	6EP4683-6LB00-0AY0
LED ③ lights up green	Normal operation
LED ③ off	Supply voltage missing

2.4.3.2 SITOP inrush current limiter

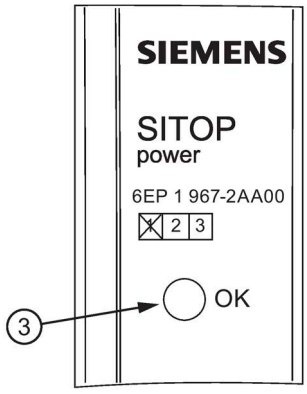

Figure 2-23 Status indicator

Status indicator	6EP1967-2AA00
LED ③ lights up green	Normal operation
LED ③ off	Supply voltage missing

2.5 Dimensions and weight

2.5.1 Redundancy modules

2.5.1.1 SITOP RED1200

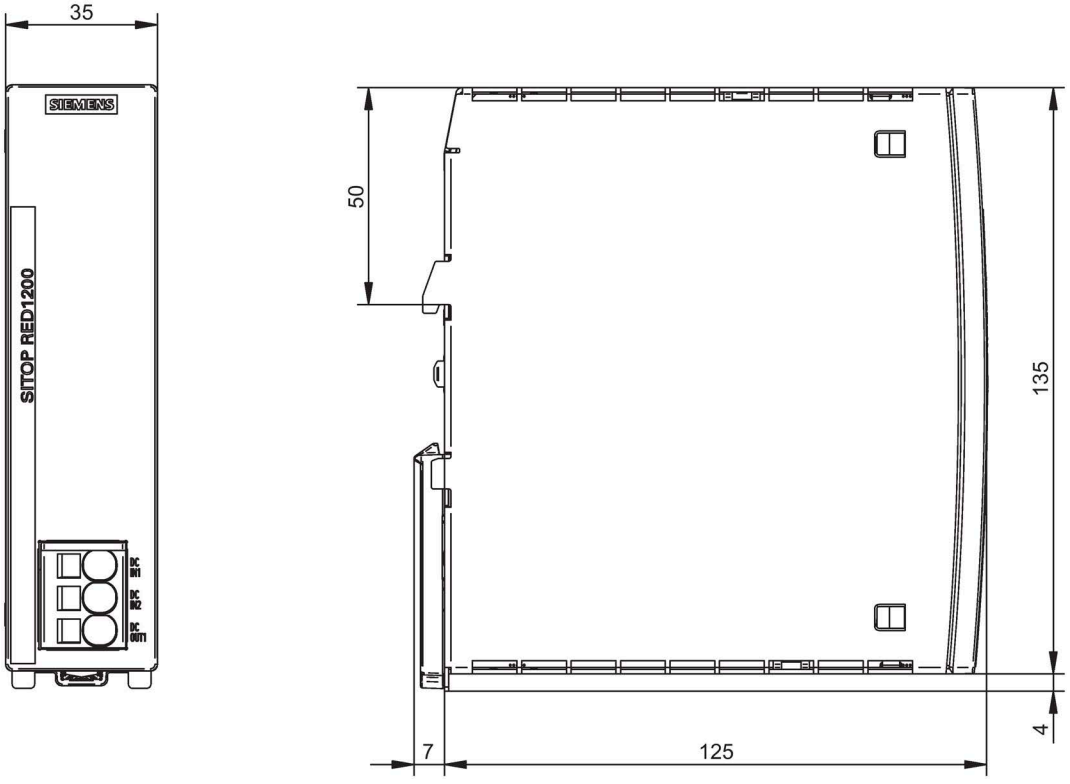

Figure 2-24 Dimension drawing 6EP4346-7RB00-0AX0

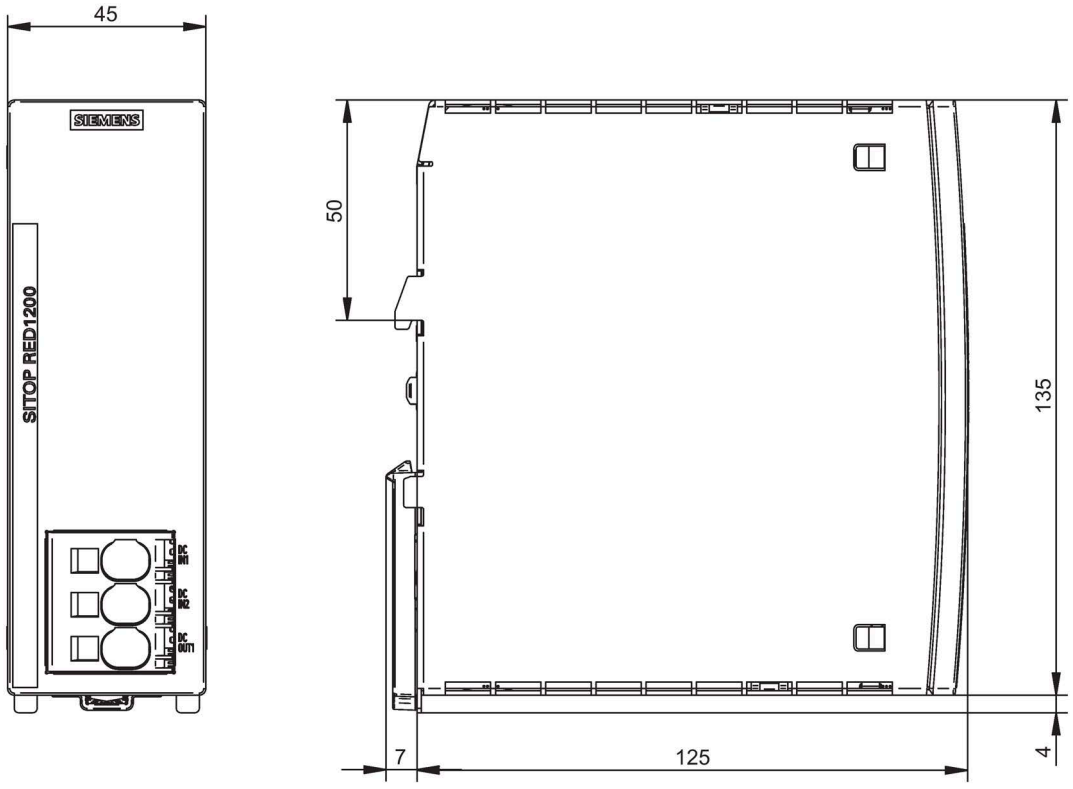

Figure 2-25 Dimension drawing 6EP4347-7RB00-0AX0 and 6EP4347-7RC00-0AX0

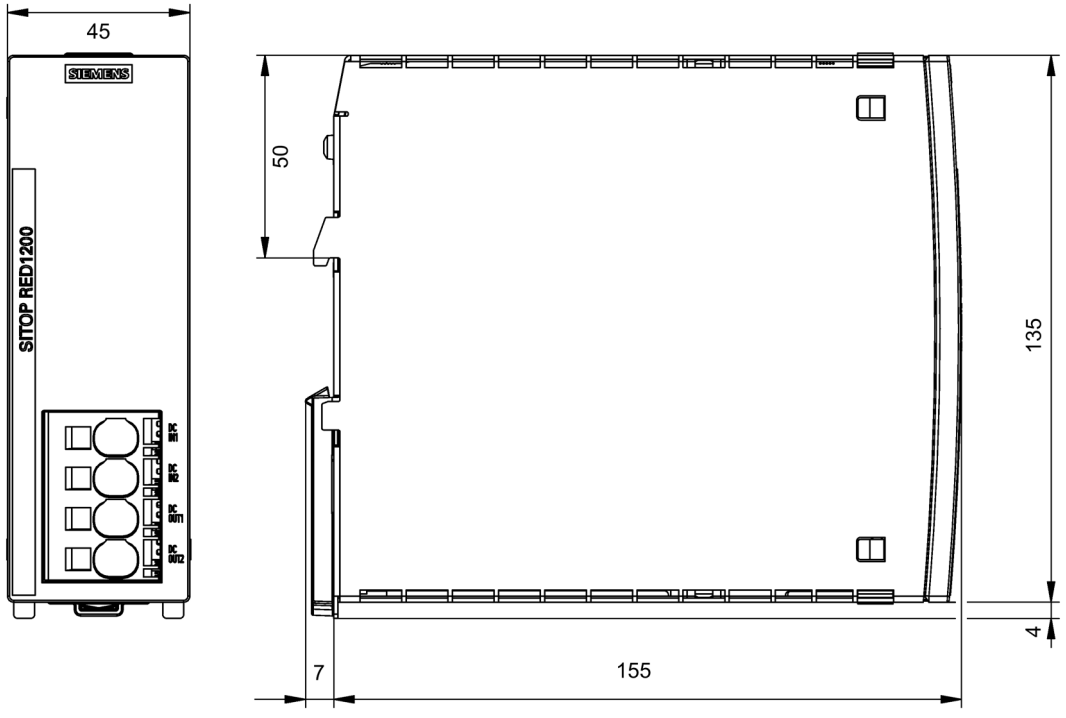

Figure 2-26 Dimension drawing 6EP4348-7RB00-0AX0

	6EP4346-7RB00-0AX0	6EP4347-7RB00-0AX0 6EP4347-7RC00-0AX0	6EP4348-7RB00-0AX0
Dimensions (W × H × D) in mm	35 × 135 × 125	45 × 135 × 125	45 × 135 × 155
Weight	0.47 kg	0.50 kg	1.01 kg

2.5.1.2 SITOP PSE202U

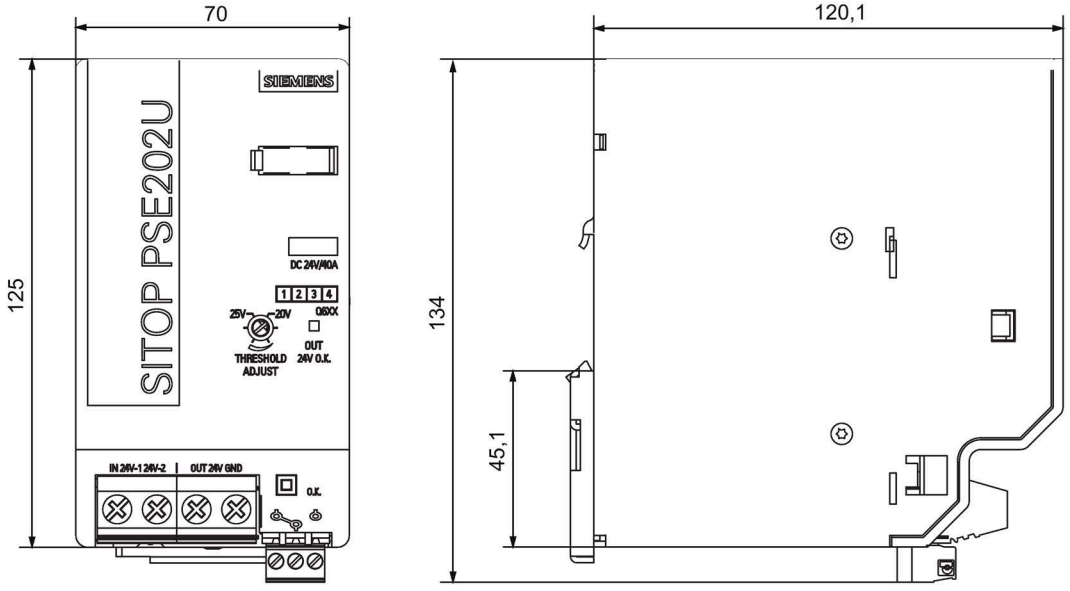

Figure 2-27 Dimension drawing 6EP1961-3BA21

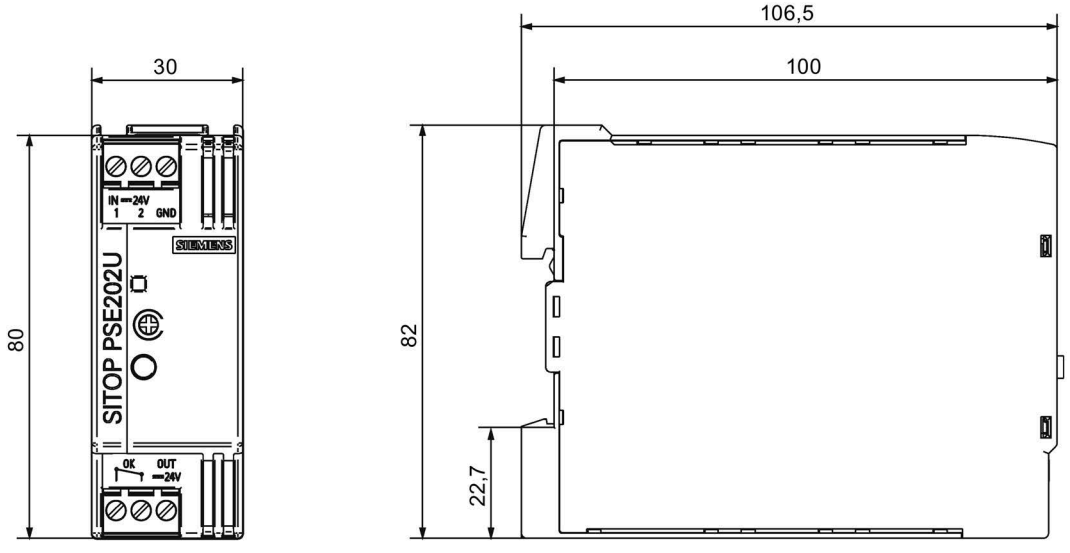

Figure 2-28 Dimension drawing 6EP1962-2BA00

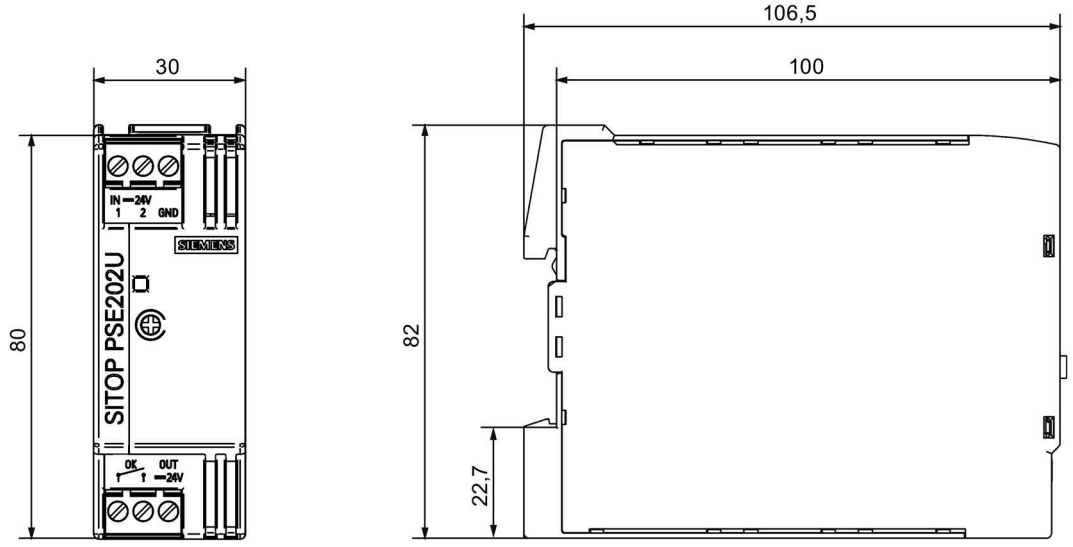

Figure 2-29 Dimension drawing 6EP1964-2BA00

	6EP1961-3BA21	**6EP1962-2BA00**	**6EP1964-2BA00**
Dimensions (W × H × D) in mm	70 × 125 × 120.1	30 × 80 × 100	30 × 80 × 100
Weight	0.5 kg	0.125 kg	0.125 kg

2.5.2 Buffer modules

2.5.2.1 SITOP BUF1200

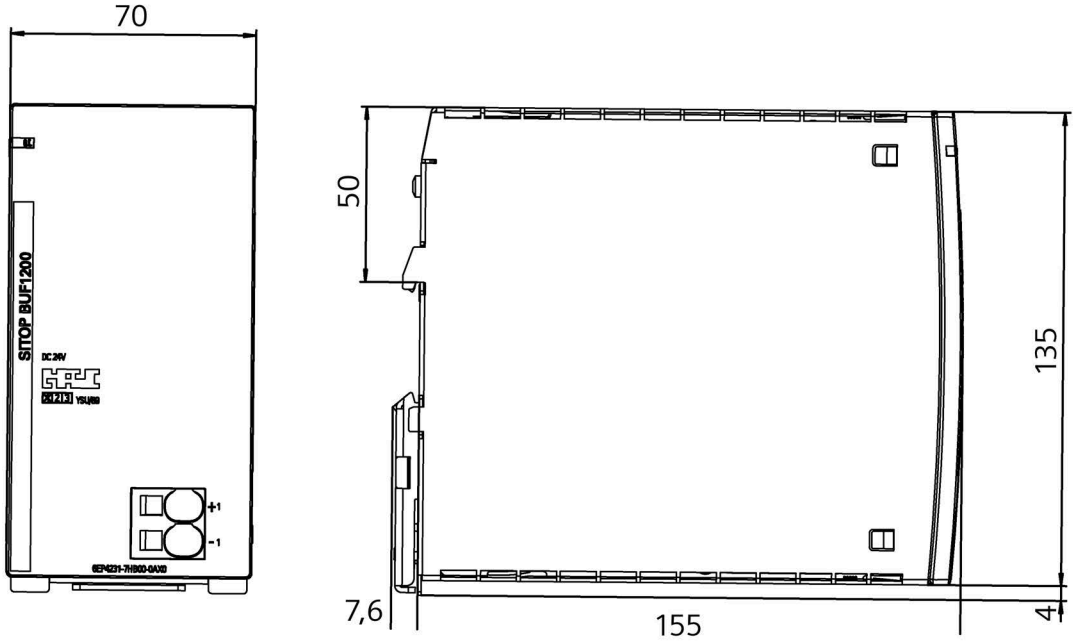

Figure 2-30 Dimension drawing

	6EP4231-7HB00-0AX0 and 6EP4231-7HC00-0AX0
Dimensions (W × H × D) in mm	70 × 135 × 155
Weight	Approx. 1.5 kg

2.5.2.2 SITOP PSE201U

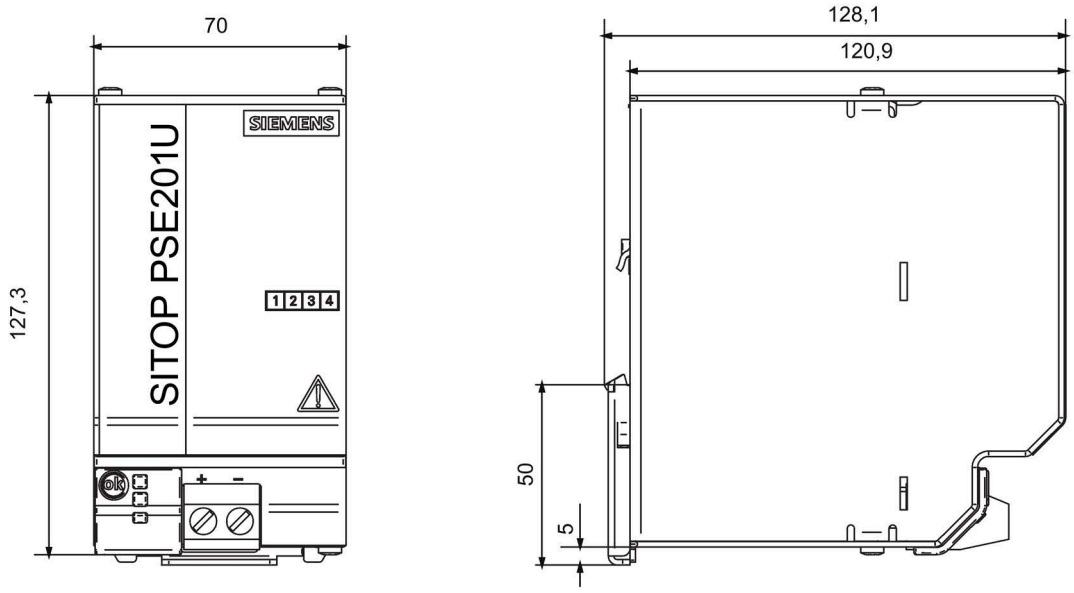

Figure 2-31 Dimension drawing

	6EP1961-3BA01
Dimensions (W × H × D) in mm	70 × 125 × 120.9
Weight	approx. 1.2 kg

2.5.3 Inrush current limiter

2.5.3.1 Logo! ICL230

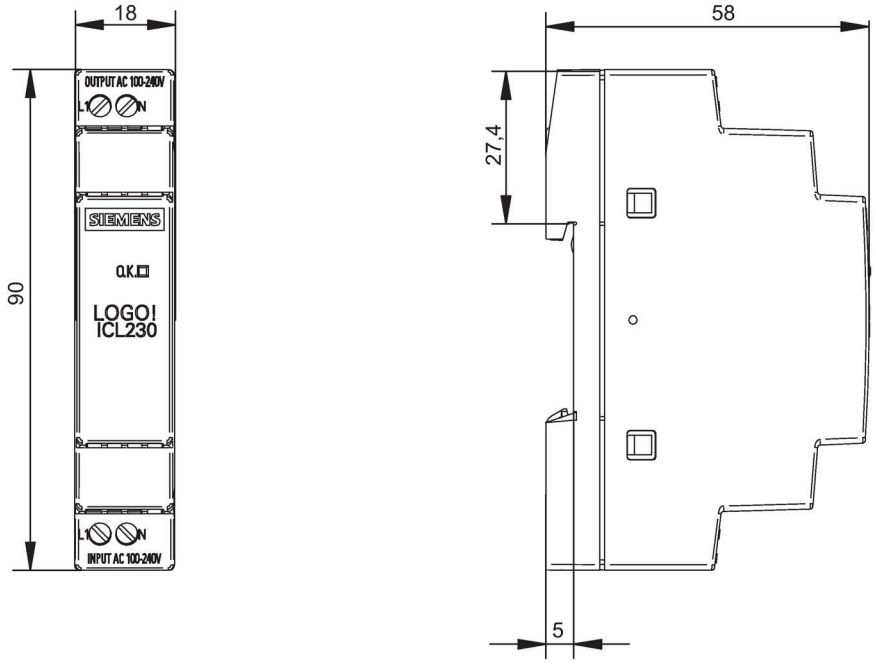

Figure 2-32 Dimension drawing

	6EP4683-6LB00-0AY0
Dimensions (W × H × D) in mm	18 × 90 × 53
Weight	0.14 kg

2.5.3.2 SITOP inrush current limiter

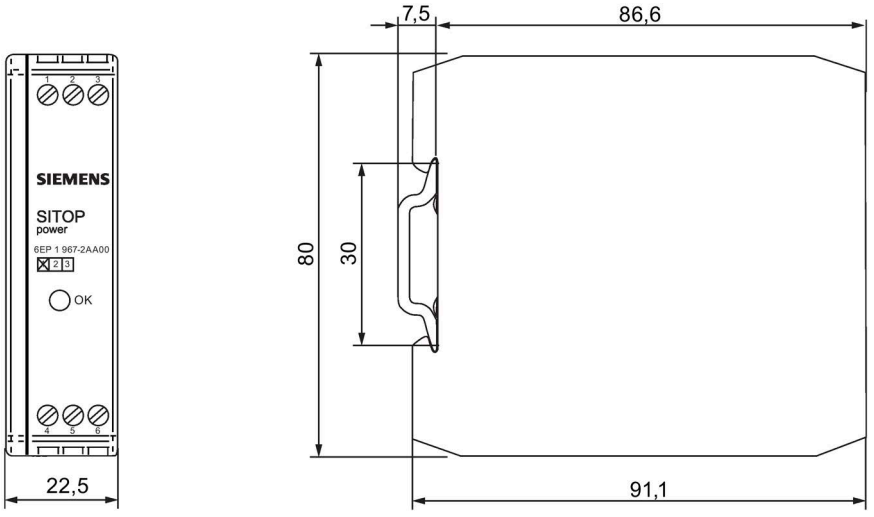

Figure 2-33 Dimension drawing

	6EP1967-2AA00
Dimensions (W × H × D) in mm	22.5 × 80 × 86.6
Weight	0.12 kg

Mounting/removal

3

⚠ WARNING

Installing the device in a housing or a control cabinet

SITOP expansion modules are chassis devices. They must be installed in a housing or control cabinet where only qualified personnel have access.

3.1 Redundancy modules

3.1.1 SITOP RED1200

The device can be mounted in a control cabinet on standard mounting rails (see Chapter Mechanical system (Page 93))

Mounting

To mount the device, position it with the mounting rail guide at the upper edge of the standard mounting rail and press down to lock it into place. If this is too difficult, press the slider ③ at the same time, as described under "Removal".

Removing

To remove, pull up the slider ③ using a screwdriver (see Figure 3-1 Mounting/removal (Page 46)) and disengage the device at the bottom edge of the standard mounting rail. Then you can remove the device from the upper edge of the standard mounting rail.

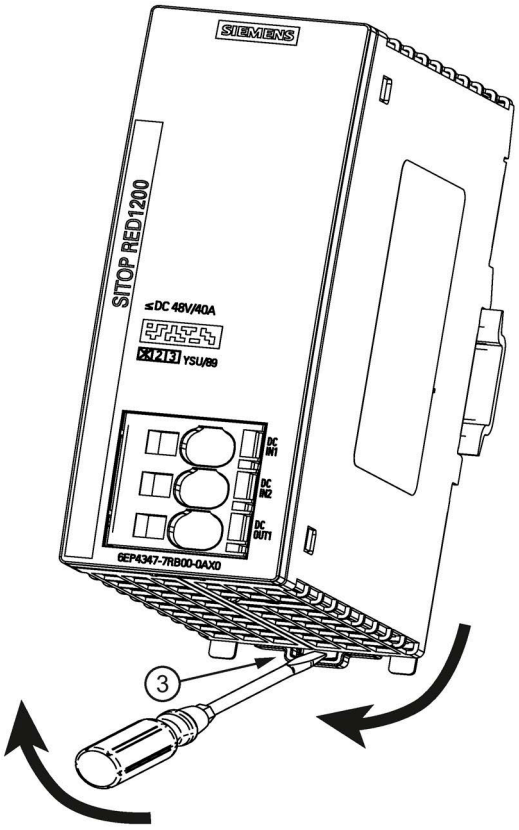

Figure 3-1 Mounting/removal

WARNING

Use in hazardous zones

If device SITOP RED1200 Ex (6EP4347-7RC00-0AX0) is installed in a hazardous zone (II 3G Ex ec IIC T4 Gc) then it must be installed in a distribution box with degree of protection IP54 or higher. This distribution box must comply with the requirements of IEC/EN 60079-0/ GB3836.1 and must require a tool for opening.

3.1.2 6EP1961-3BA21

The device can be mounted in a control cabinet on standard mounting rails (see Chapter Mechanical system (Page 93))

Mounting

To mount the device, position it with the mounting rail guide at the upper edge of the standard mounting rail and press down to lock it into place. If this is too difficult, press slider ⑥ at the same time, as described under "Removal".

Removing

To remove, pull up the slider ⑥ using a screwdriver (see Figure 3-2 Mounting/removal (Page 47)) and disengage the device at the bottom edge of the standard mounting rail. Then you can remove the device from the upper edge of the standard mounting rail.

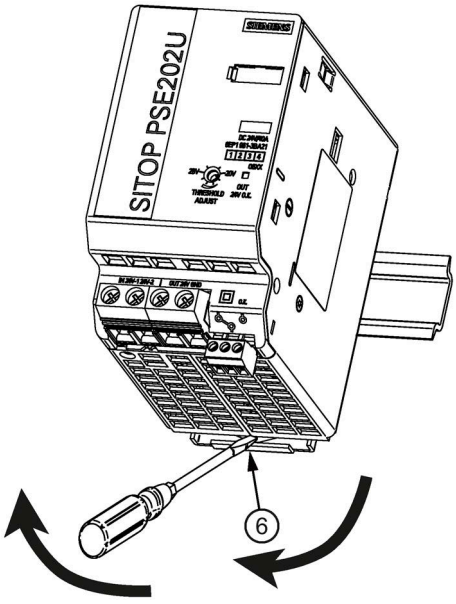

Figure 3-2 Mounting/removal

3.1.3 6EP1962-2BA00 and 6EP1964-2BA00

The device can be mounted in a control cabinet on standard mounting rails (see Chapter Mechanical system (Page 93)).

Mounting

To mount the device, position it with the mounting rail guide at the upper edge of the standard mounting rail and press down to lock it into place. If this is too difficult, press slider ⑥ at the same time, as described under "Removal".

Removing

To remove, pull up the slider ⑥ using a screwdriver (see Figure 3-3 Mounting/removal (Page 48)) and disengage the device at the bottom edge of the standard mounting rail. Then you can remove the device from the upper edge of the standard mounting rail.

Note

As an alternative to using a screwdriver, the mounting rail interlocking can be manually actuated from the top using the latch ⑤, and therefore no tools are required when mounting and removing.

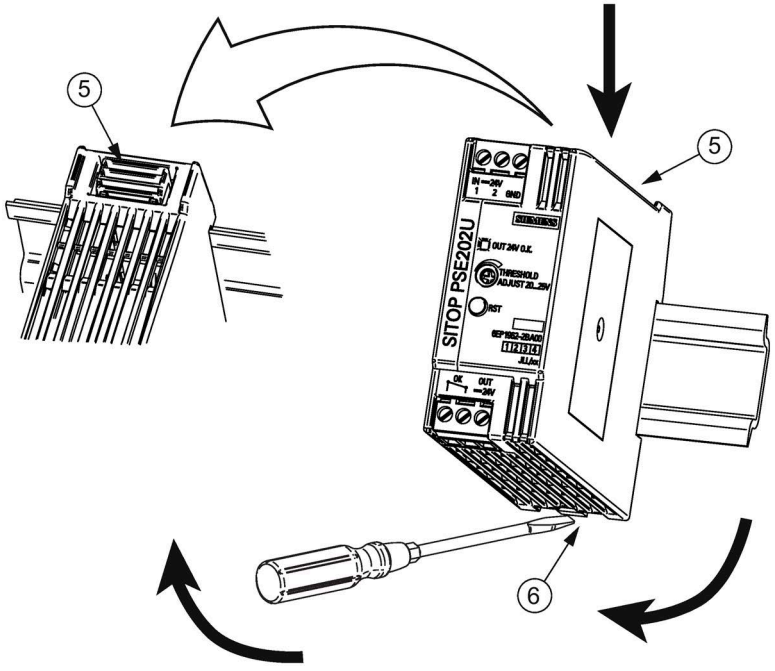

Figure 3-3 Mounting/removal

3.2 Buffer modules

3.2.1 SITOP BUF1200

The device can be mounted in a control cabinet on standard mounting rails (see Chapter Mechanical system (Page 93)).

Mounting

To mount the device, position it with the mounting rail guide at the upper edge of the standard mounting rail and press down to lock it into place. If this is too difficult, press the slider ③ at the same time, as described under "Removal".

Removing

To remove, pull up the slider ③ using a screwdriver (see Figure 3-4 Mounting/removal (Page 49)) and disengage the device at the bottom edge of the standard mounting rail. Then you can remove the device from the upper edge of the standard mounting rail.

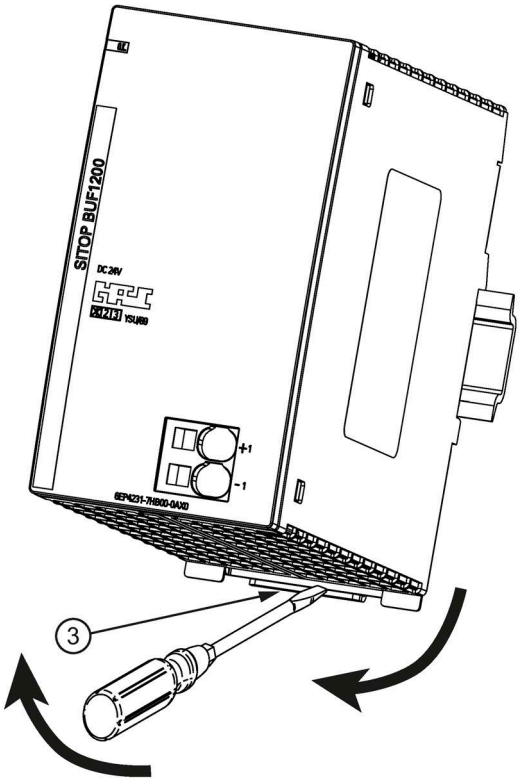

Figure 3-4 Mounting/removal

WARNING

Use in hazardous zones

If device SITOP BUF1200 Ex (6EP4231-7HC00-0AX0) is installed in a hazardous zone (II 3G Ex ec IIC T4 Gc) then it must be installed in a distribution box with degree of protection IP54 or higher. This distribution box must comply with the requirements of IEC/EN 60079-0/ GB3836.1 and must require a tool for opening.

3.2.2 SITOP PSE201U

The device can be mounted in a control cabinet on standard mounting rails (see Chapter Mechanical system (Page 93)).

Mounting

To mount the device, position it with the mounting rail guide at the upper edge of the standard mounting rail and press down to lock it into place. If this is too difficult, press the slider ③ at the same time, as described under "Removal".

Removing

To remove, pull up the slider ③ using a screwdriver (see Figure 3-5 Mounting/removal (Page 50)) and disengage the device at the bottom edge of the standard mounting rail. Then you can remove the device from the upper edge of the standard mounting rail.

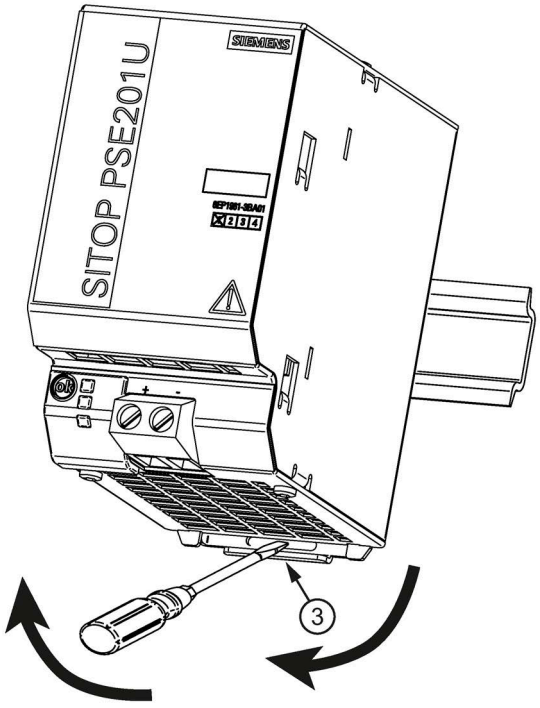

Figure 3-5 Mounting/removal

3.3 Inrush current limiter

3.3.1 Logo! ICL230

The device can be mounted in a control cabinet and snapped onto standard mounting rails (see Chapter Mechanical system (Page 93)), or can be mounted on walls and panels using the withdrawable mounting lug (see Figure 3-7 Wall/panel mounting (Page 52)).

Mounting

To mount the device, position it with the mounting rail guide at the upper edge of the standard mounting rail and press down to lock it into place. If this is too difficult, press the slider ④ at the same time, as described under "Removal".

Removing

To remove, pull up the slider ④ using a screwdriver (see Figure 3-6 Mounting/removal (Page 51)) and disengage the device at the bottom edge of the standard mounting rail. Then you can remove the device from the upper edge of the standard mounting rail.

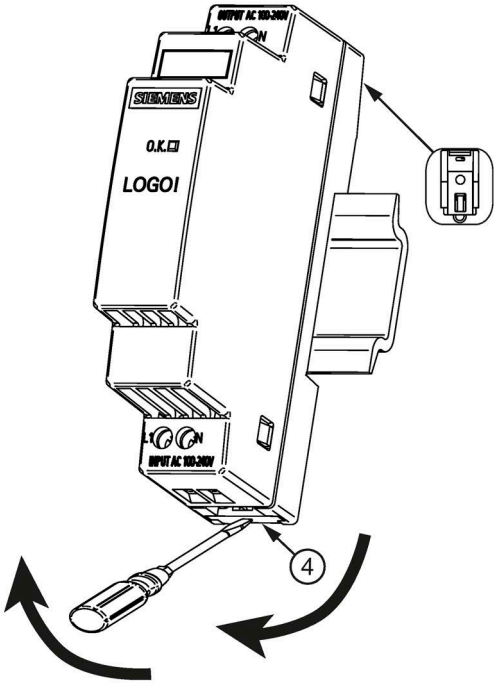

Figure 3-6 Mounting/removal

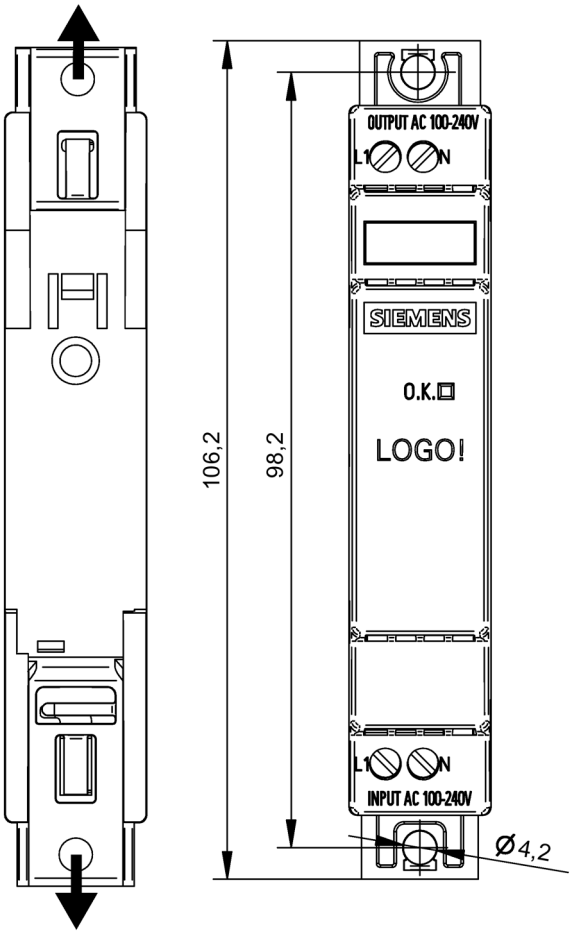

Figure 3-7 Wall/panel mounting

3.3.2 SITOP inrush current limiter

The device can be mounted in a control cabinet on standard mounting rails (see Chapter Mechanical system (Page 93)).

Mounting

To snap on, attach the device to the top of the mounting rail (I), press down gently (II), press-in the lower side (III) and snap it into place (IV).

Removing

To remove the device, press it downwards and release it from the mounting rail.

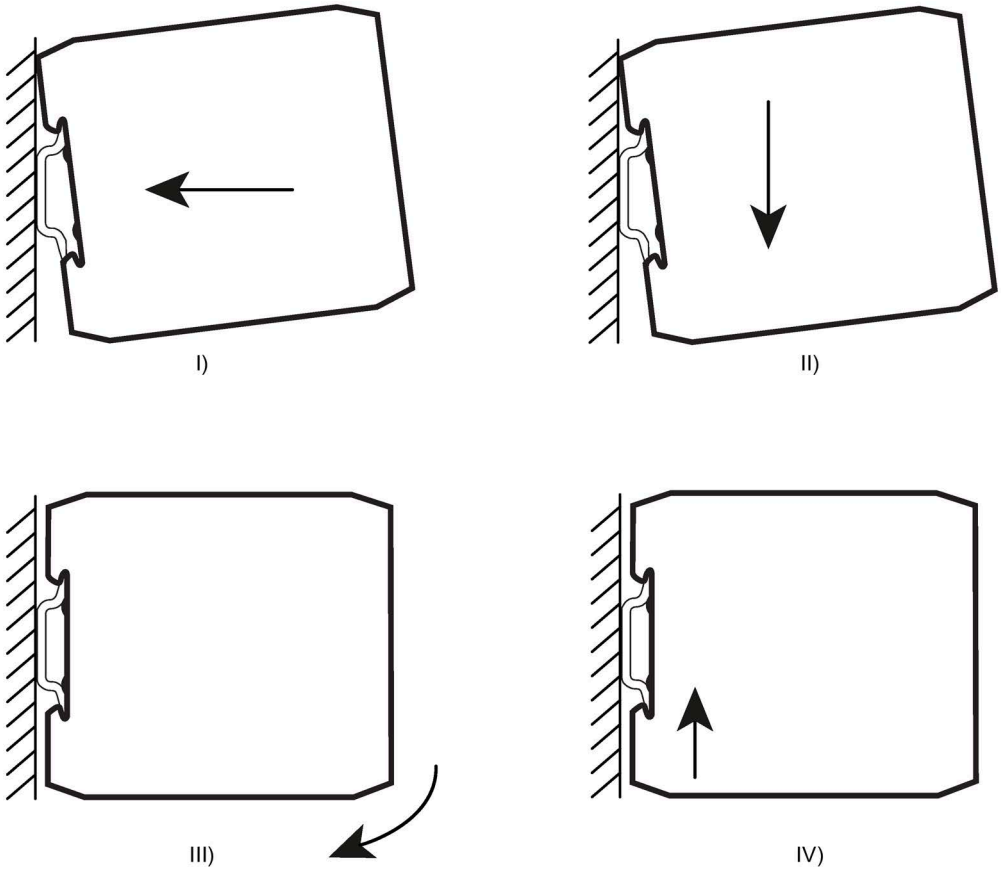

Figure 3-8 Mounting/removal

Mounting position, mounting clearances

4

4.1 Standard mounting position

Expansion modules must be mounted vertically in such a way that

- 6EP1961-3BA21 terminals are at the bottom

- 6EP1962-2BA00 terminals "OK" and "OUT 24V" are at the bottom

- 6EP1964-2BA00 terminals "OK" and "OUT 24V" are at the bottom

- 6EP1961-3BA01 terminals are at the bottom

- 6EP1967-2AA00 input terminals are at the top and the output terminals at the bottom.

A clearance of at least 50 mm should be maintained above and below the device; no clearance is required at the sides.

The SITOP RED1200 redundancy modules must be mounted vertically to ensure correct cooling so that

- 6EP4346-7RB00-0AX0 terminals are at the bottom

- 6EP4347-7RB00-0AX0 and 6EP4347-7RC00-0AX0 terminals are at the bottom

- 6EP4348-7RB00-0AX0 terminals are at the bottom.

A clearance of at least 45 mm should be maintained above and below the device; no clearance is required at the sides.

The SITOP BUF1200 buffer module must be mounted vertically to ensure correct cooling so that for

- 6EP4231-7HB00-0AX0 and 6EP4231-7HC00-0AX0, the terminals are at the bottom.

A clearance of at least 45 mm should be maintained above and below the device; no clearance is required at the sides.

The LOGO! ICL230 inrush limiter must be mounted vertically to ensure correct cooling so that

- 6EP4683-6LB00-0AY0 output terminals are at the top and the input terminals at the bottom.

A clearance of at least 20 mm should be maintained above and below the device; no clearance is required at the sides.

Output current as a function of the ambient temperature and mounting height

Buffer module 6EP4231-7HB00-0AX0: -25 ... 70 °C without derating
Buffer module 6EP1961-3BA01: -25 ... 70 °C without derating
Inrush current limiter 6EP1967-2AA00: -25 ... 60 °C without derating
Inrush current limiter 6EP4683-6LB00-0AY0: -40 ... 70 °C without derating

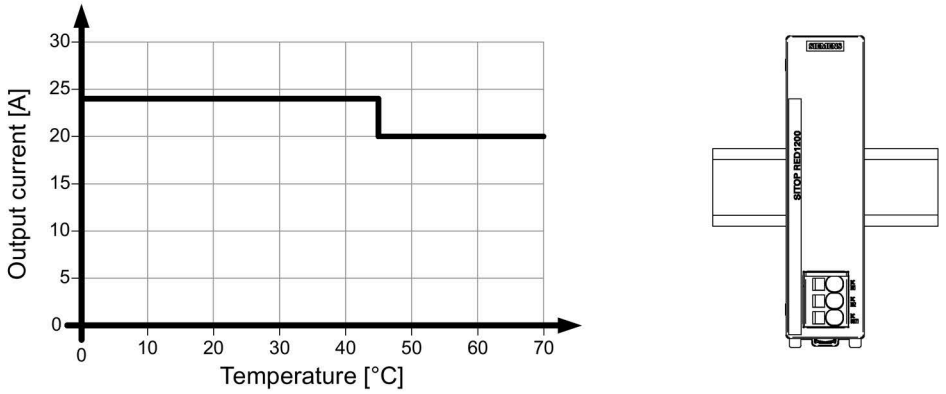

Figure 4-1 6EP4346-7RB00-0AX0: Output current in the standard mounting position

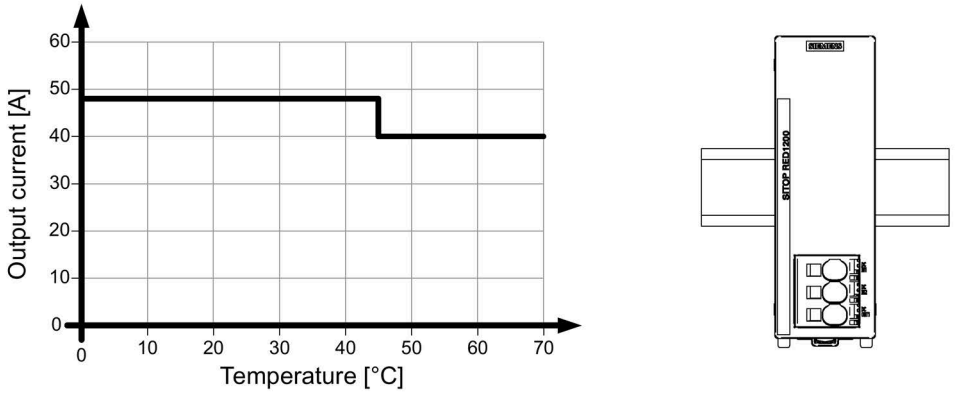

Figure 4-2 6EP4347-7RB00-0AX0 and 6EP4347-7RC00-0AX0: Output current in the standard mounting position

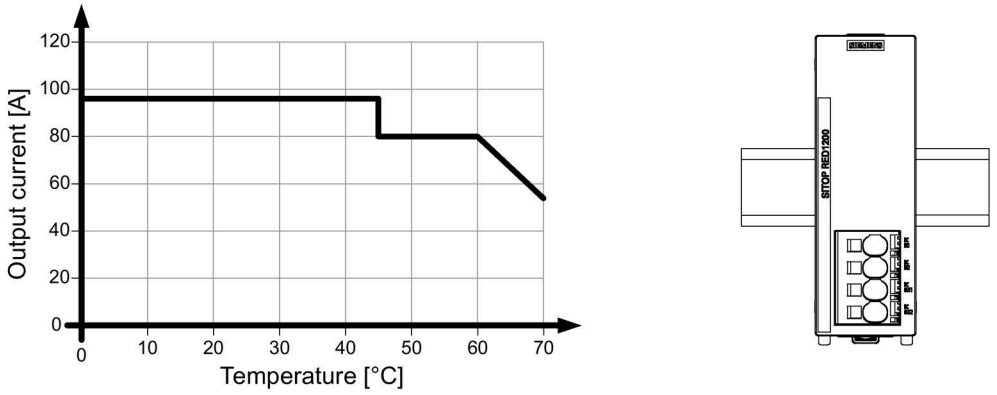

Figure 4-3 6EP4348-7RB00-0AX0: Output current in the standard mounting position

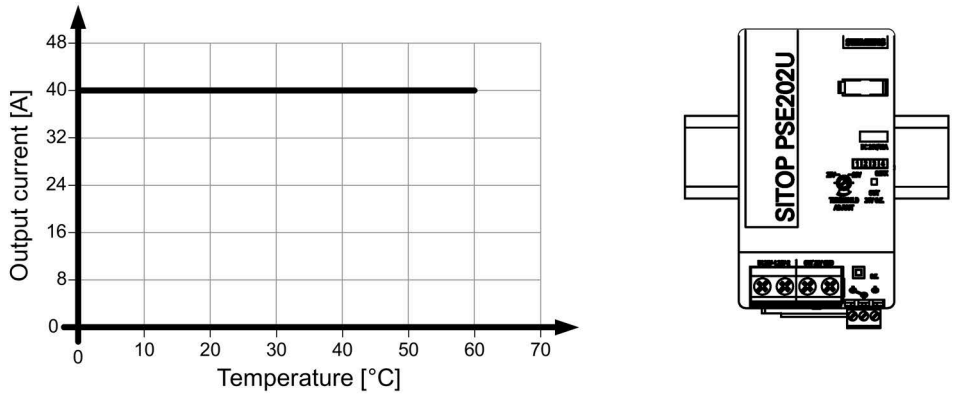

Figure 4-4 6EP1961-3BA21: Output current in the standard mounting position

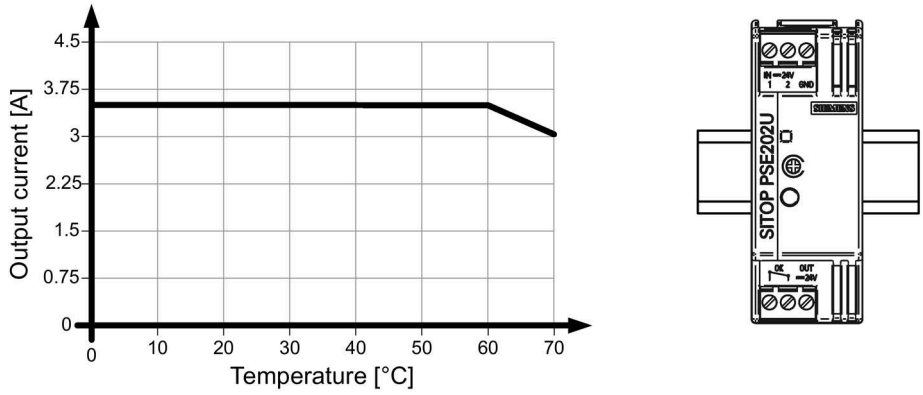

Figure 4-5 6EP1962-2BA00: Output current in the standard mounting position

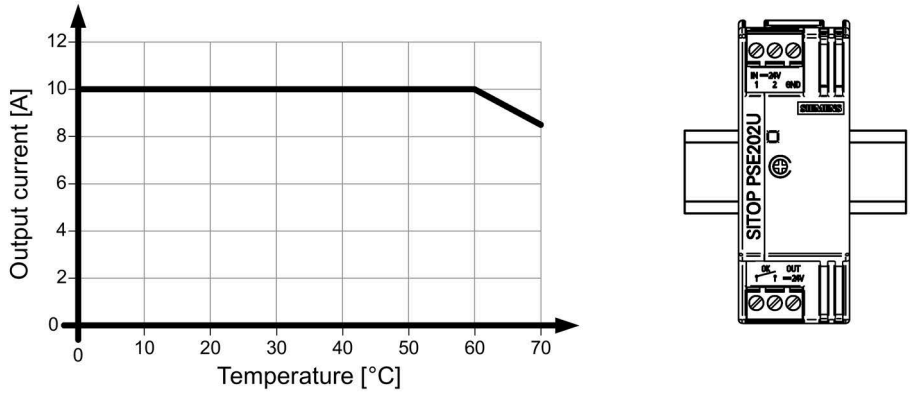

Figure 4-6 6EP1964-2BA00: Output current in the standard mounting position

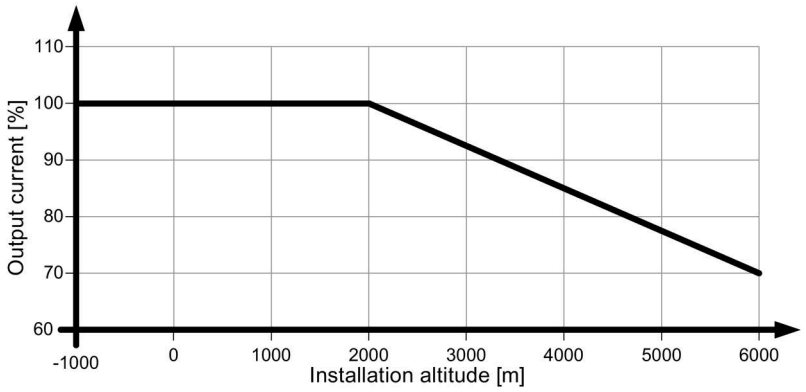

Figure 4-7 Altitude derating

4.2 Other mounting positions

4.2.1 Other mounting positions

For mounting positions that deviate from the standard mounting position, derating factors (reduction of the output power or the permissible ambient temperature) must be observed in accordance with the following diagrams.

Note

In the case of mounting positions that deviate from the standard mounting position, reduced mechanical resistance of the devices against vibration and shock must be expected.

Especially when installing on a vertically fastened standard mounting rail, additional measures may be required, e.g. to prevent the device from slipping on the standard mounting rail.

4.2.2 SITOP RED1200

4.2.2.1 6EP4346-7RB00-0AX0

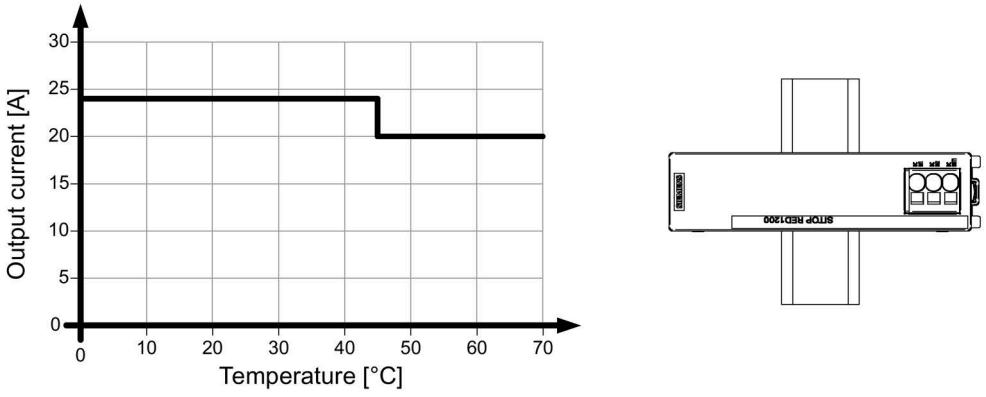

Figure 4-8 Mounting position 1

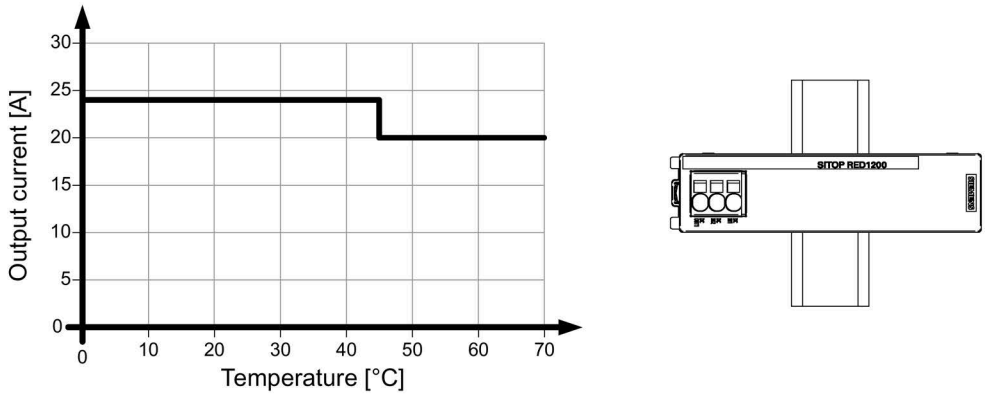

Figure 4-9 Mounting position 2

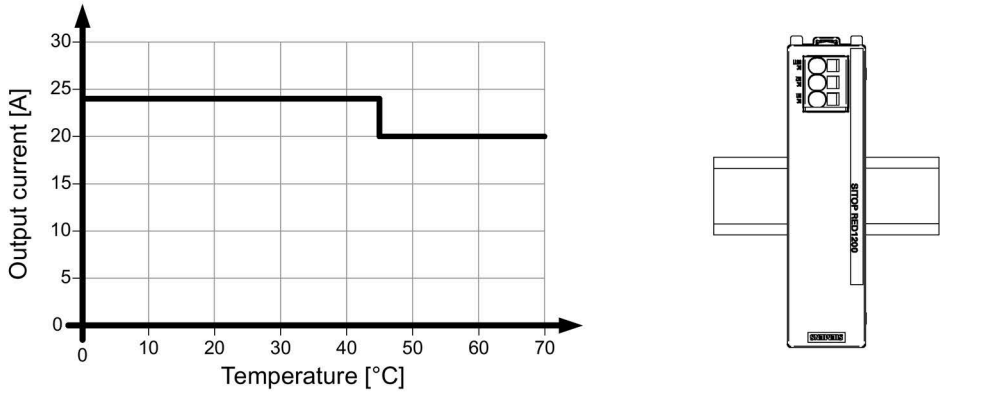

Figure 4-10 Mounting position 3

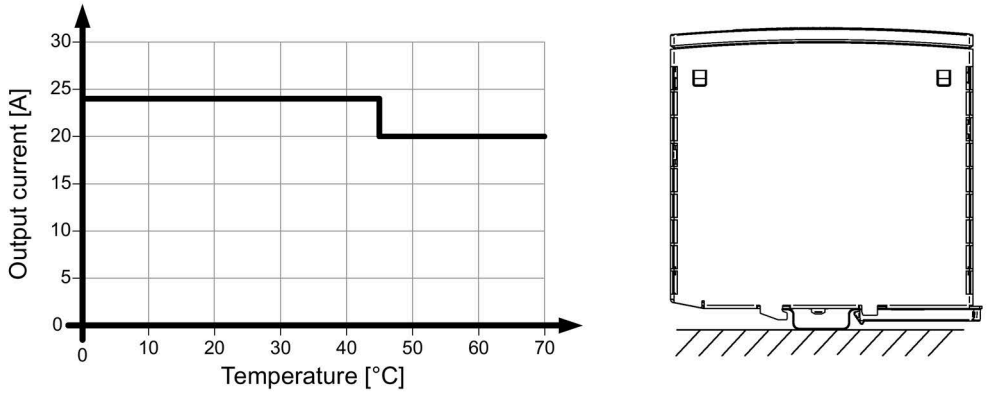

Figure 4-11 Mounting position 4

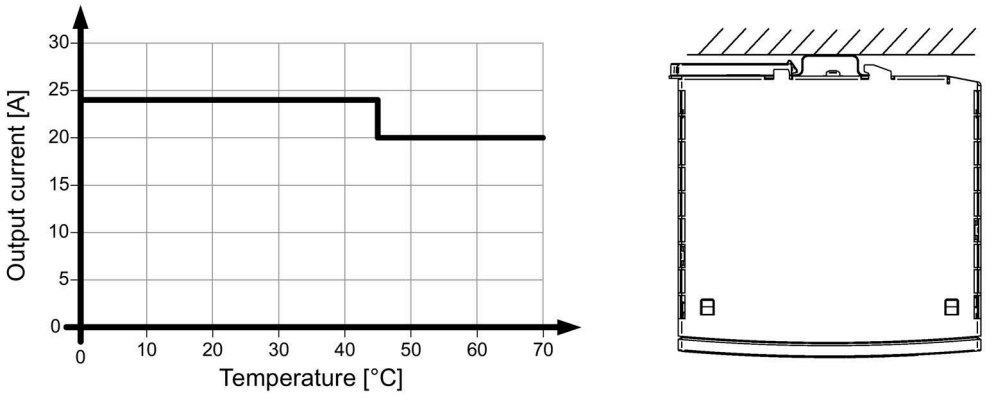

Figure 4-12 Mounting position 5

4.2.2.2 6EP4347-7RB00-0AX0 and 6EP4347-7RC00-0AX0

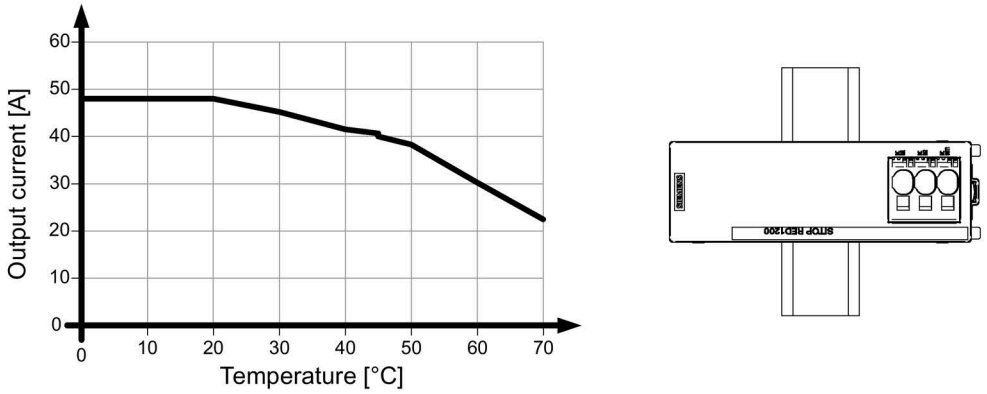

Figure 4-13 Mounting position 1

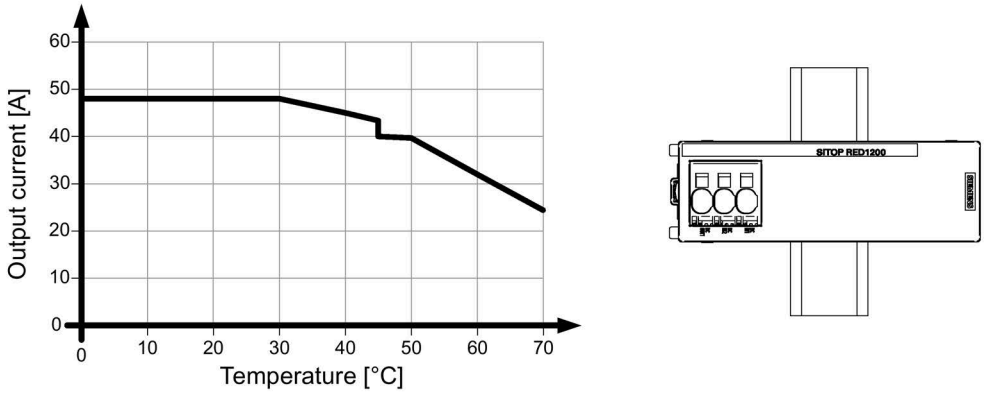

Figure 4-14 Mounting position 2

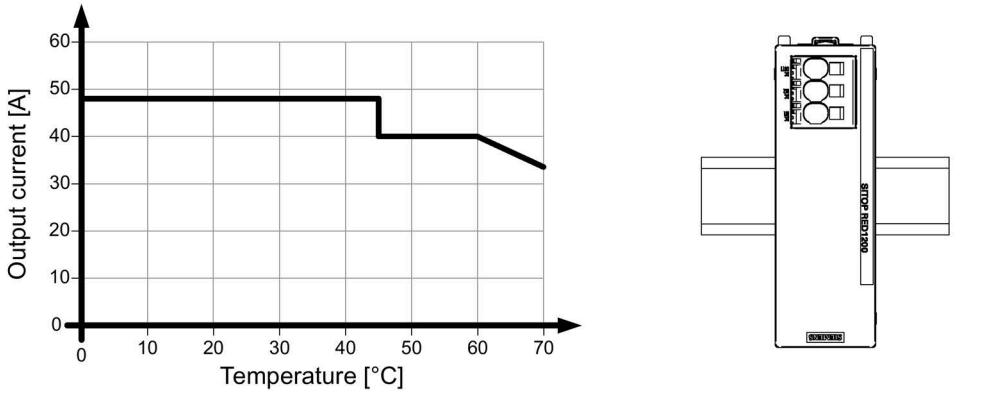

Figure 4-15 Mounting position 3

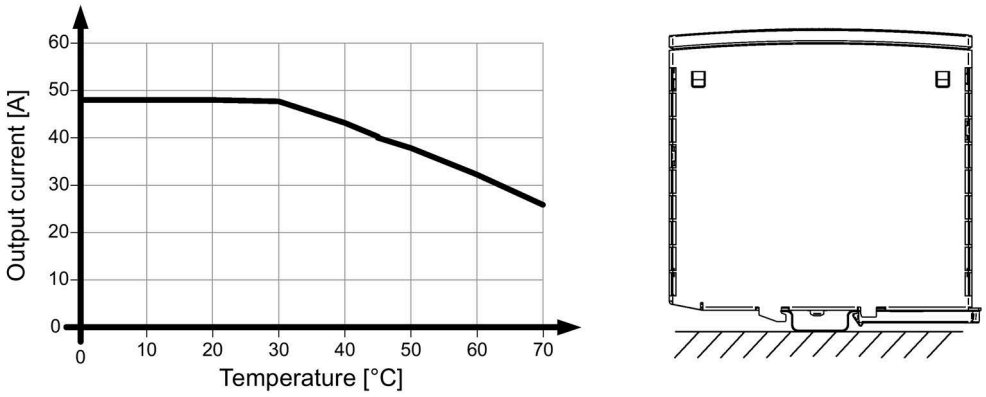

Figure 4-16 Mounting position 4

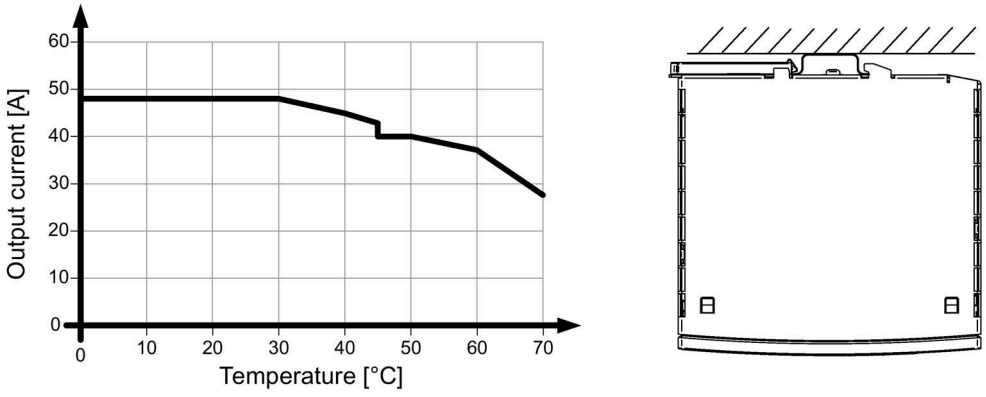

Figure 4-17 Mounting position 5

4.2.2.3 6EP4348-7RB00-0AX0

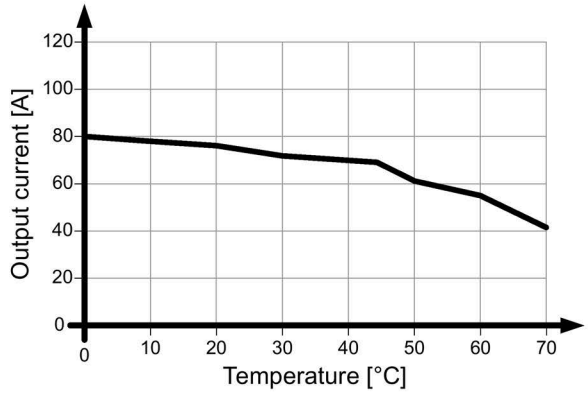

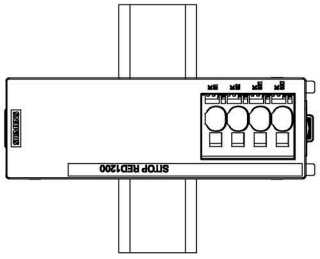

Figure 4-18 Mounting position 1

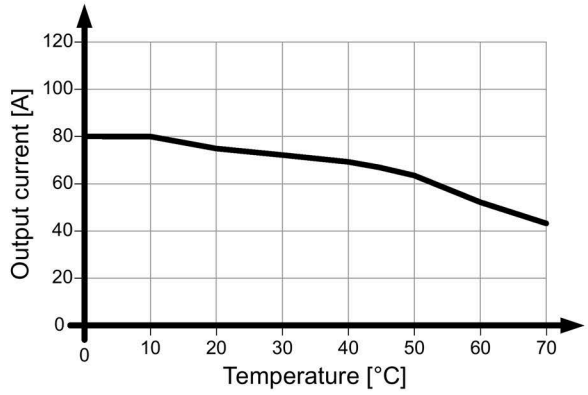

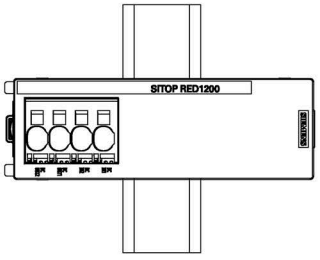

Figure 4-19 Mounting position 2

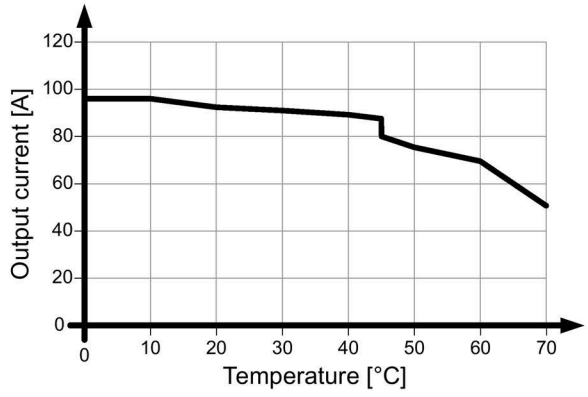

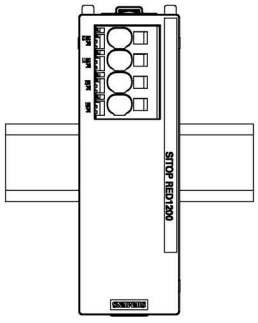

Figure 4-20 Mounting position 3

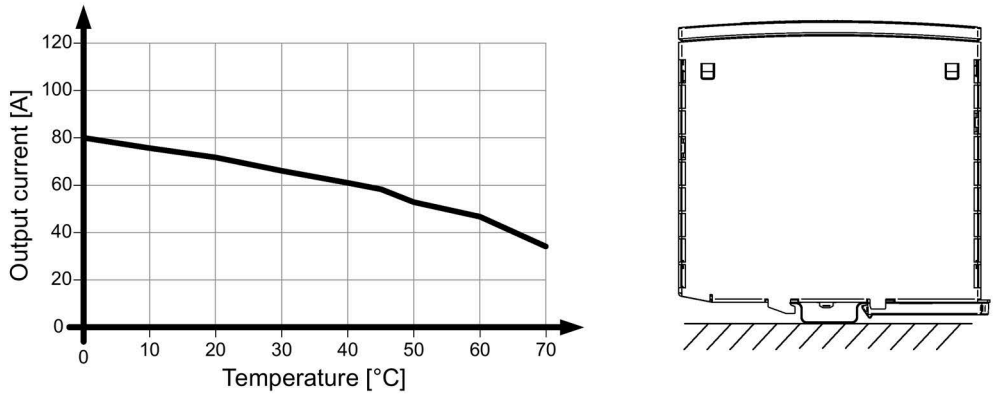

Figure 4-21 Mounting position 4

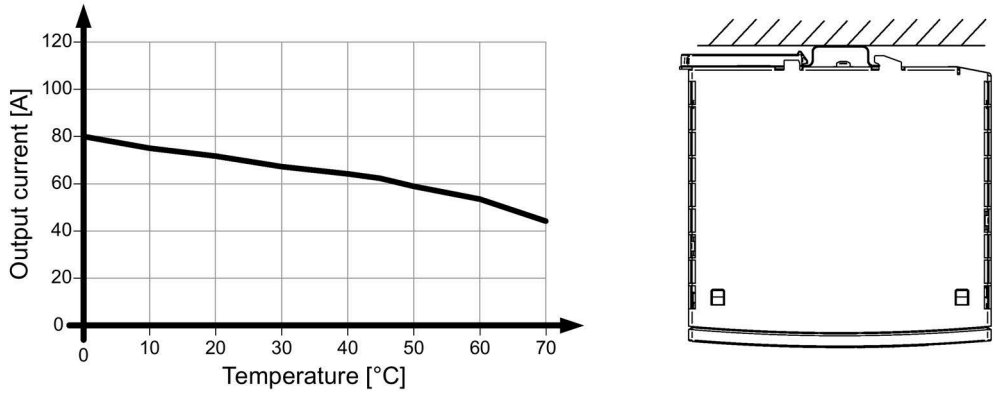

Figure 4-22 Mounting position 5

4.2.3 SITOP PSE202U

4.2.3.1 6EP1961-3BA21

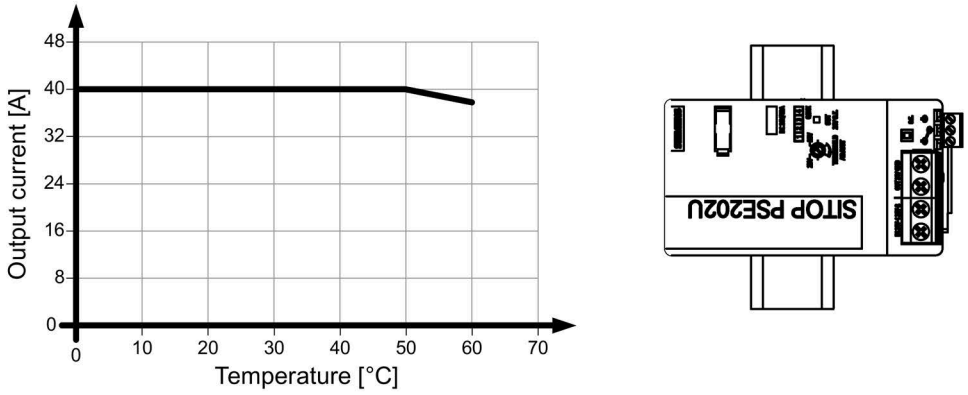

Figure 4-23 Mounting position 1

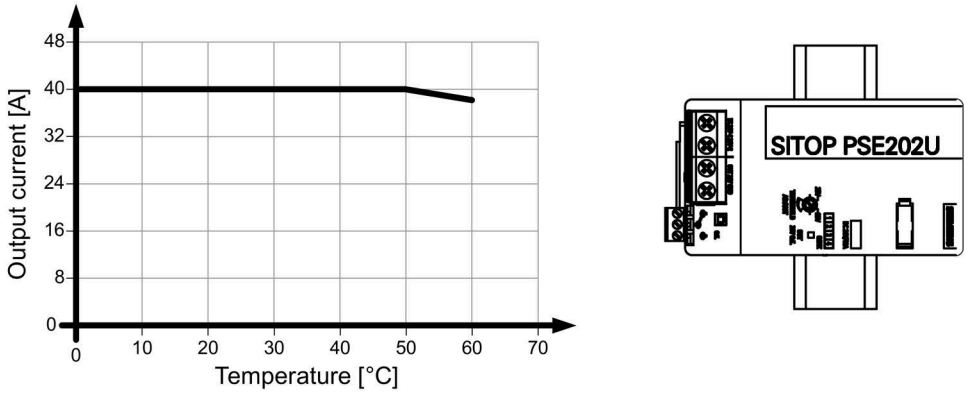

Figure 4-24 Mounting position 2

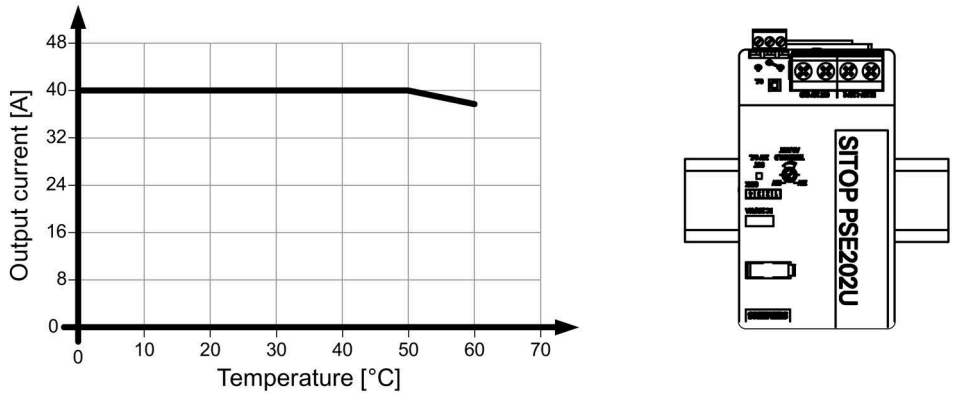

Figure 4-25 Mounting position 3

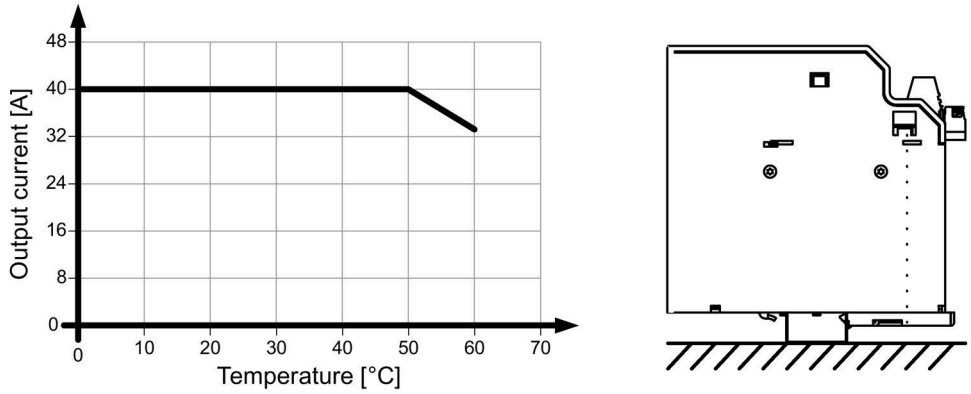

Figure 4-26 Mounting position 4

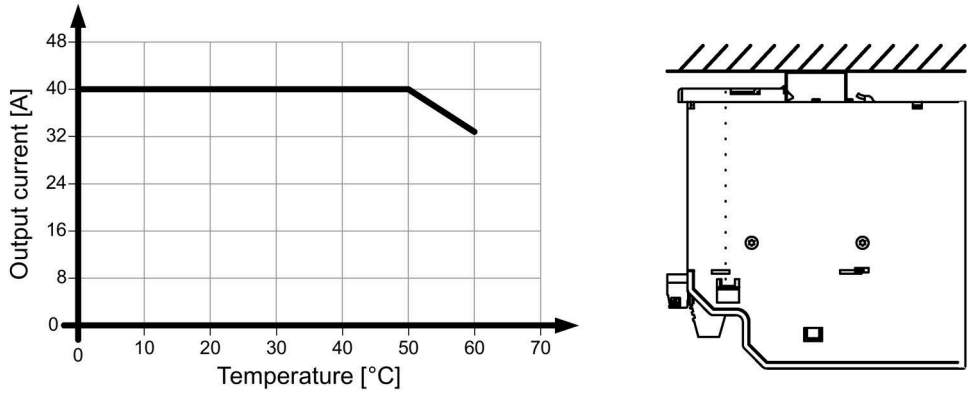

Figure 4-27 Mounting position 5

4.2.3.2 6EP1962-2BA00

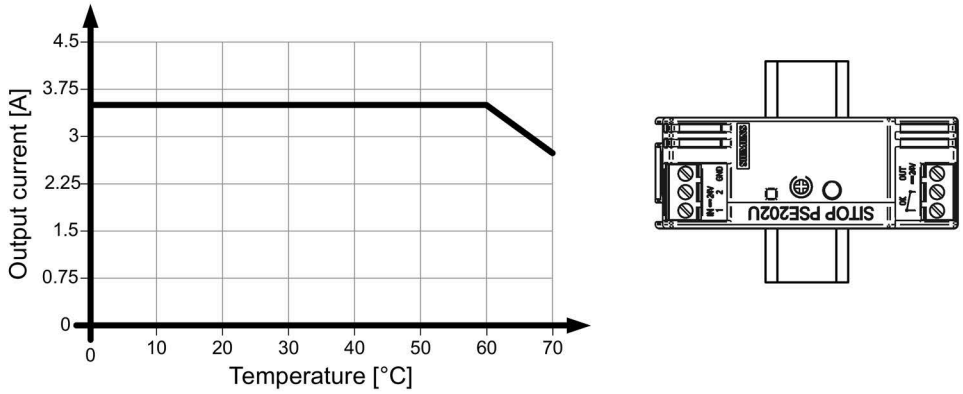

Figure 4-28 Mounting position 1

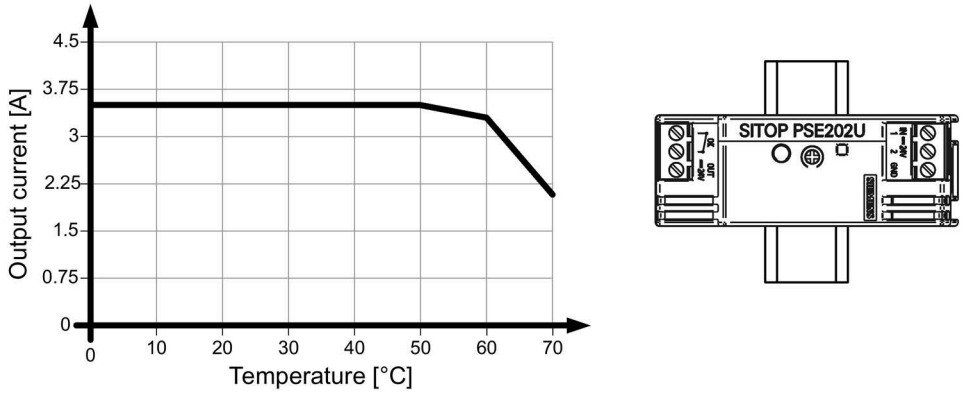

Figure 4-29 Mounting position 2

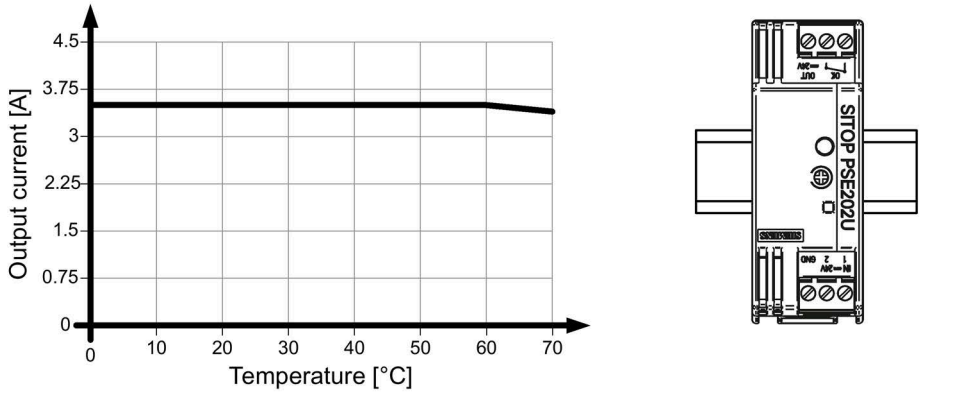

Figure 4-30 Mounting position 3

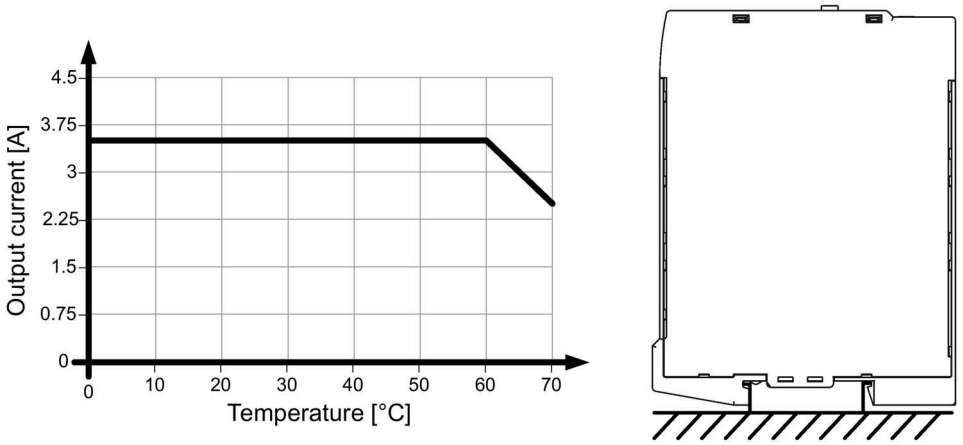

Figure 4-31 Mounting position 4

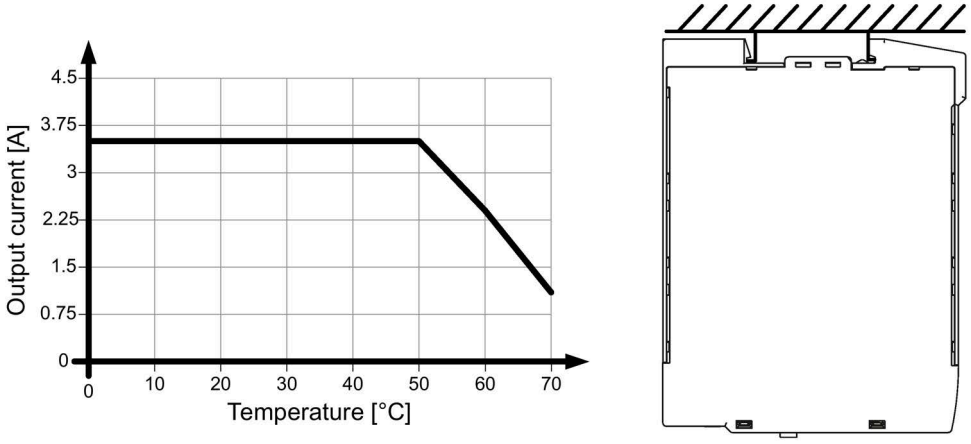

Figure 4-32 Mounting position 5

4.2.3.3 6EP1964-2BA00

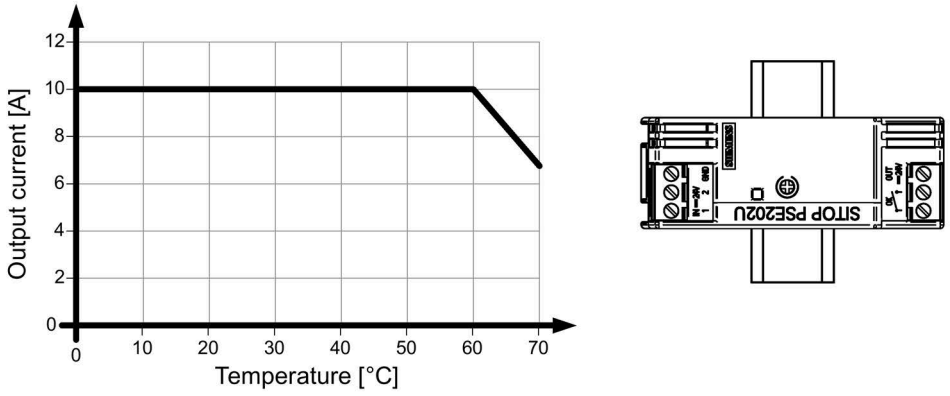

Figure 4-33 Mounting position 1

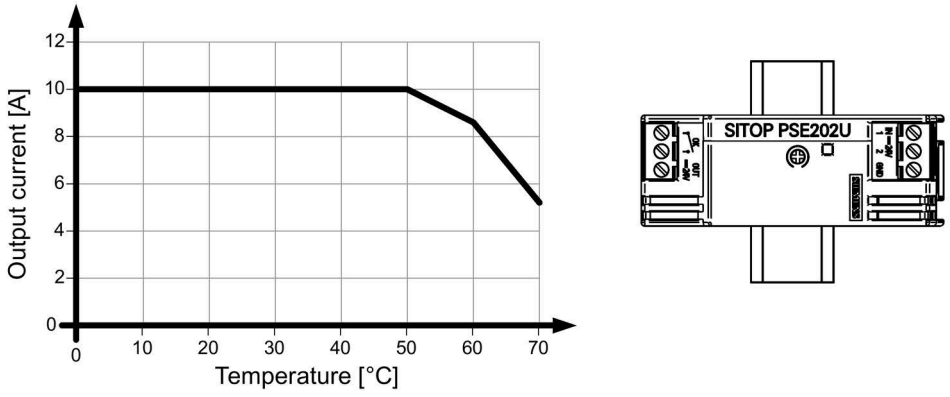

Figure 4-34 Mounting position 2

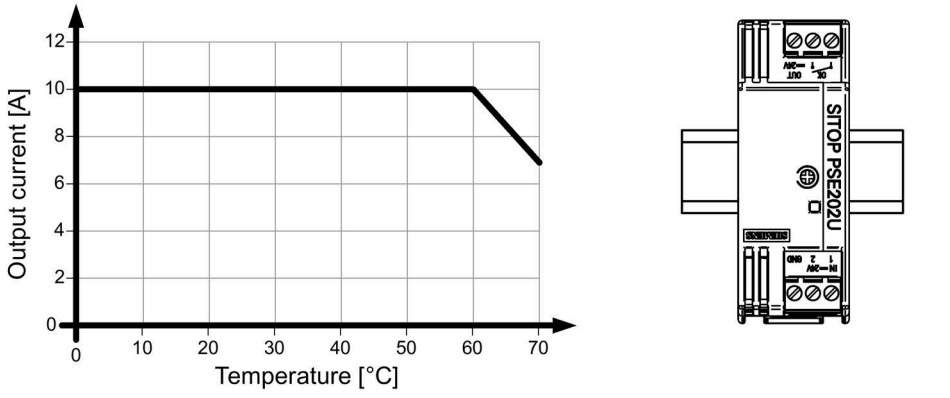

Figure 4-35 Mounting position 3

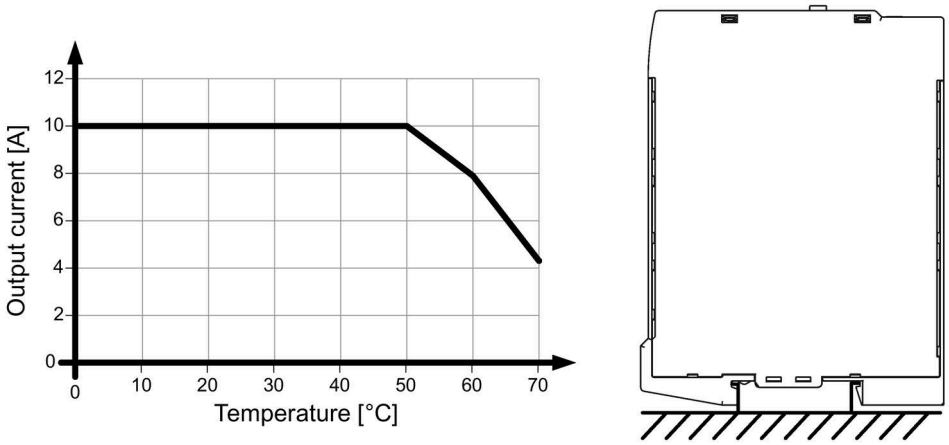

Figure 4-36 Mounting position 4

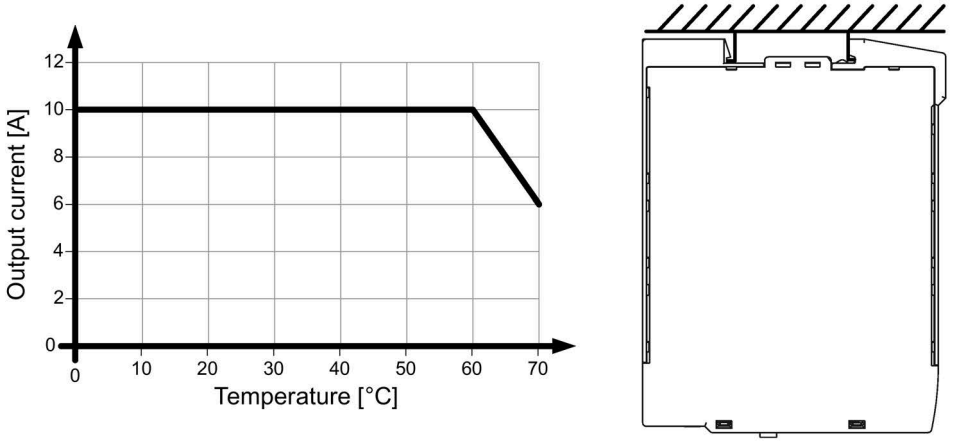

Figure 4-37 Mounting position 5

4.2.4 Buffer modules

4.2.4.1 SITOP BUF1200 (6EP4231-7HB00-0AX0 and 6EP4231-7HC00-0AX0)

For buffer modules 6EP4231-7HB00-0AX0 and 6EP4231-7HC00-0AX0, the following applies: -25 ... 70 °C without derating for all mounting positions.

4.2.4.2 SITOP PSE201U (6EP1961-3BA01)

For buffer module 6EP1961-3BA01, the following applies: -25 ... 70°C without derating for all mounting positions.

4.2.5 Inrush current limiter

The following applies for the 6EP1967-2AA00 and 6EP4683-6LB00-0AY0 inrush limiters: Mounting position rotated through 180° without derating, for all other mounting positions, maximum switch-on frequency once every 15 min.

Installation

5

⚠ WARNING

Hazard due to electric shock

Before installation or maintenance work can begin, the system's main switch must be switched off and measures taken to prevent it being switched on again. If this instruction is not observed, touching live parts can result in death or serious injury.

Copper wire that as a minimum must comply with the subsequent temperature requirement must be used to wire the devices.

Expansion modules		
Type	**Article number**	**Temperature**
Redundancy module SITOP RED1200 (2 × 10 A)	6EP4346-7RB00-0AX0	90 °C (UL 508: 60/75 °C)
Redundancy module SITOP RED1200 (2 × 20 A)	6EP4347-7RB00-0AX0	90 °C (UL 508: 60/75 °C)
Redundancy module SITOP RED1200 (2 × 40 A)	6EP4348-7RB00-0AX0	90 °C (UL 508: 60/75 °C)
Redundancy module SITOP PSE202U (2 × 20 A)	6EP1961-3BA21	60/75 °C
Redundancy module SITOP PSE202U NEC CLASS 2 (4 A)	6EP1962-2BA00	60/75 °C
Redundancy module SITOP PSE202U (2 × 5 A)	6EP1964-2BA00	90 °C
Buffer module SITOP BUF1200	6EP4231-7HB00-0AX0	75 °C
Buffer module SITOP PSE201U	6EP1961-3BA01	75 °C
Inrush current limiter Logo! ICL230	6EP4683-6LB00-0AY0	90 °C
Inrush current limiter SITOP	6EP1967-2AA00	60/75 °C

Expansion modules Ex		
Type	**Article number**	**Temperature**
Redundancy module SITOP RED1200 Ex (2 × 20 A)	6EP4347-7RC00-0AX0	90 °C (UL 508: 60/75 °C)
Buffer module SITOP BUF1200 Ex	6EP4231-7HC00-0AX0	75 °C

5.1 Input connections

NOTICE
Country-specific regulations must be observed when installing.

5.1.1 Redundancy modules

5.1.1.1 SITOP RED1200

Inputs "DC IN1" and "DC IN2" of the redundancy module must be connected with outputs "+" of the power supplies.

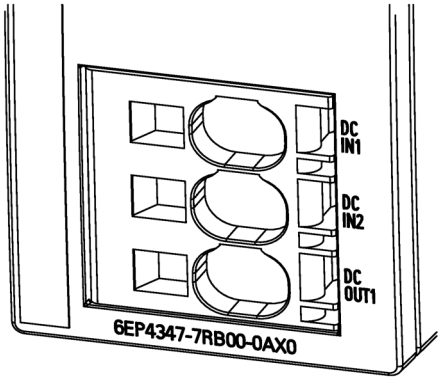

Figure 5-1 Input/output

5.1.1.2 SITOP PSE202U

Inputs "IN 24 V-1" and "IN 24 V-2" of the redundancy module must be connected with outputs "+" of the power supplies and input "GND" of the redundancy module with outputs "-" of the power supplies.

NOTICE
It is not permissible to operate the device without the GND cable being connected. It is not permissible that cables IN 24V-1 or IN 24V-2 and cable GND are interchanged.

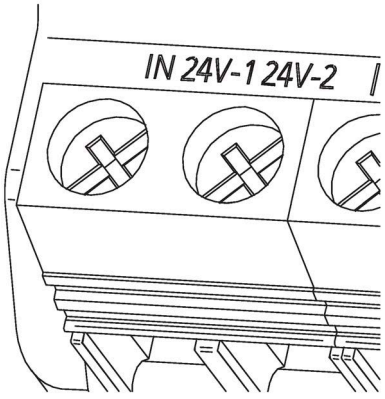

Figure 5-2 Input 6EP1961-3BA21

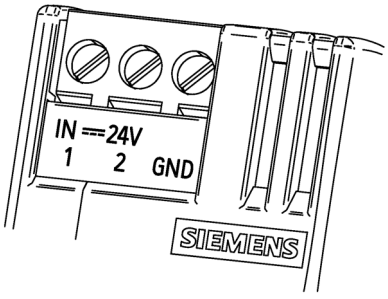

Figure 5-3 Input 6EP1962-2BA00 and 6EP1964-2BA00

5.1.2 Buffer modules

5.1.2.1 SITOP BUF1200

The buffer module is connected in parallel with the SITOP power supply. To do this, input/output "+" of the buffer module must be connected with output "+" of the power supply, and input/output "-" of the buffer module, with output "-" of the power supply. The buffer module should be wired with the same conductor cross-section as the output cable of the power supply.

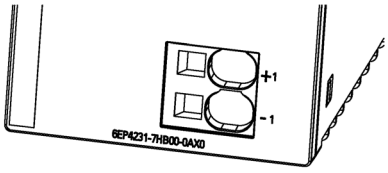

Figure 5-4 Input/output

5.1.2.2 SITOP PSE201U

The buffer module is connected in parallel with the SITOP power supply. To do this, input/output "+" of the buffer module must be connected with output "+" of the power supply, and input/output "-" of the buffer module, with output "-" of the power supply. The buffer module should be wired with the same conductor cross-section as the output cable of the power supply.

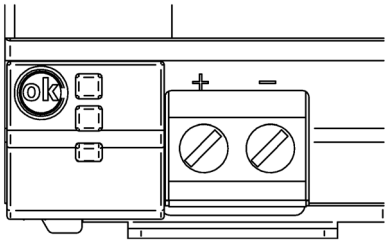

Figure 5-5 Input/output

5.1.3 Inrush current limiter

5.1.3.1 Logo! ICL230

The inrush current limiter is connected between the line supply and the power supply to be supplied. It is suitable for connection to 1-phase AC line supplies with 100 V, 120 V or 230 V 50-60 Hz or to 2-phase line supplies with 208 V line voltage on the line side, upstream of transformers, power supplies or LEDs, and using the integrated fixed resistor, it limits the inrush current to approx. 10 A at 230 V. In steady-state operation, the limiting resistor is bypassed after approx. 60 ms, therefore minimizing the associated power loss.

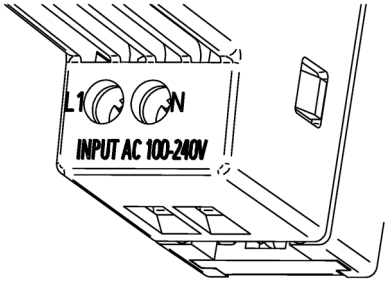

Figure 5-6 Input

5.1.3.2 SITOP inrush current limiter

The inrush current limiter is connected between the line supply and the power supply to be supplied. It is suitable for connection to 1-phase AC line supplies with 100 V, 120 V or 230 V 50-60 Hz or to 2-phase or 3-phase 208 - 480 V AC line supplies. The switch-on current pulse at 230 V is limited to approximately 8 A. In steady-state operation, the limiting element is bypassed.

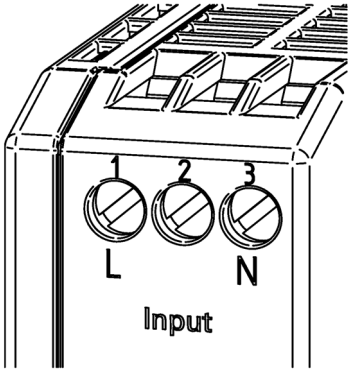

Figure 5-7 Input

Depending on the particular application, the input terminals should be connected as shown in the following wiring diagram:

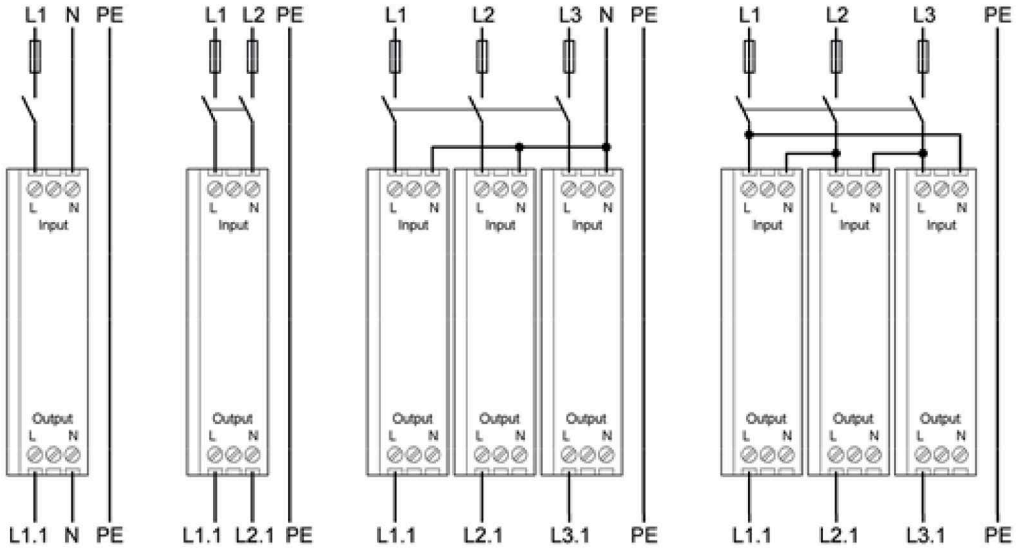

Figure 5-8 Wiring diagram

5.2 Output connections

5.2.1 Redundancy modules

5.2.1.1 SITOP RED1200

Output "DC OUT1" of the redundancy module must be connected to the load.
See Figure 5-1 Input/output (Page 74).

The subsequent wiring is recommended to guarantee safe and reliable operation of the power supplies in all operating states:

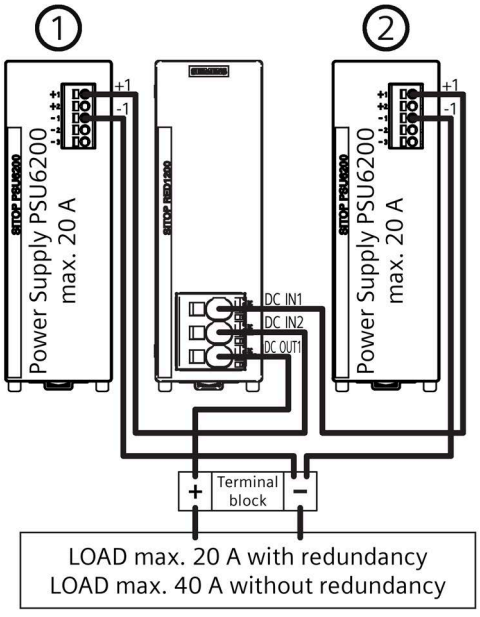

Figure 5-9 Wiring 1 module (2 × 20 A)

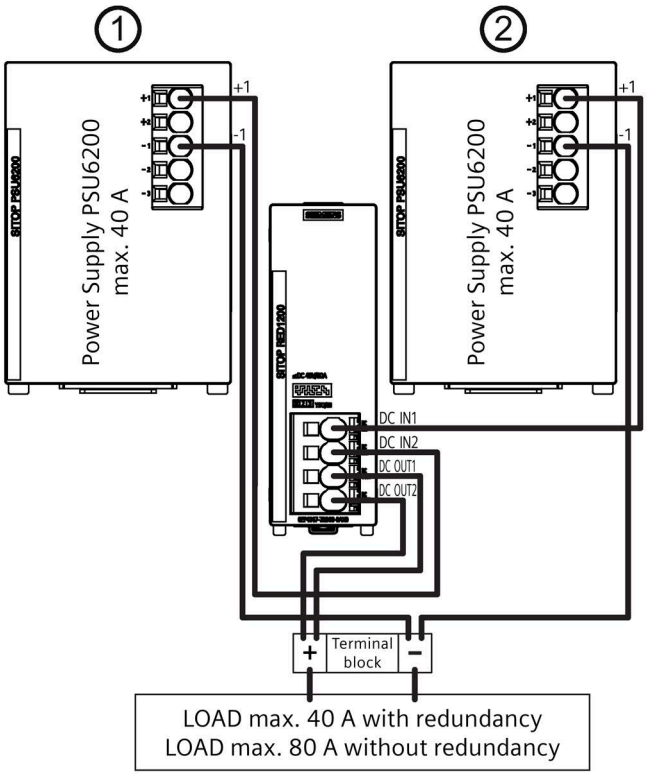

Figure 5-10 Wiring 1 module (2 × 40 A)

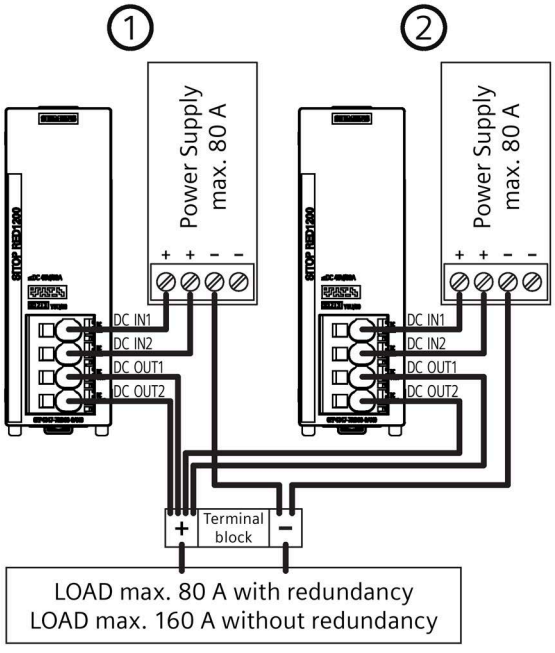

Figure 5-11 Wiring 2 modules (2 × 80 A)

To achieve an output voltage of 24/48/96 V DC, two 12/24/48 V SITOP power supplies of the same type can be connected in series. Depending on the grounding point of the secondary output voltage, voltages of +24/48/96 V, ±12/24/48 V or -24/48/96 V can be realized. To guarantee safe and reliable operation of the power supplies in all operating states, for the series connection, the subsequent wiring using two redundancy modules SITOP RED1200 is recommended.

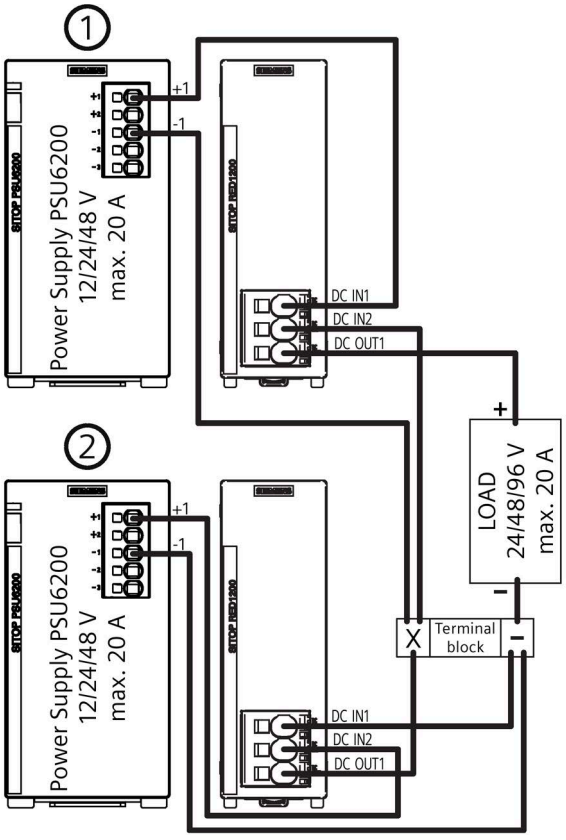

Figure 5-12 Series connection for increased voltage 1

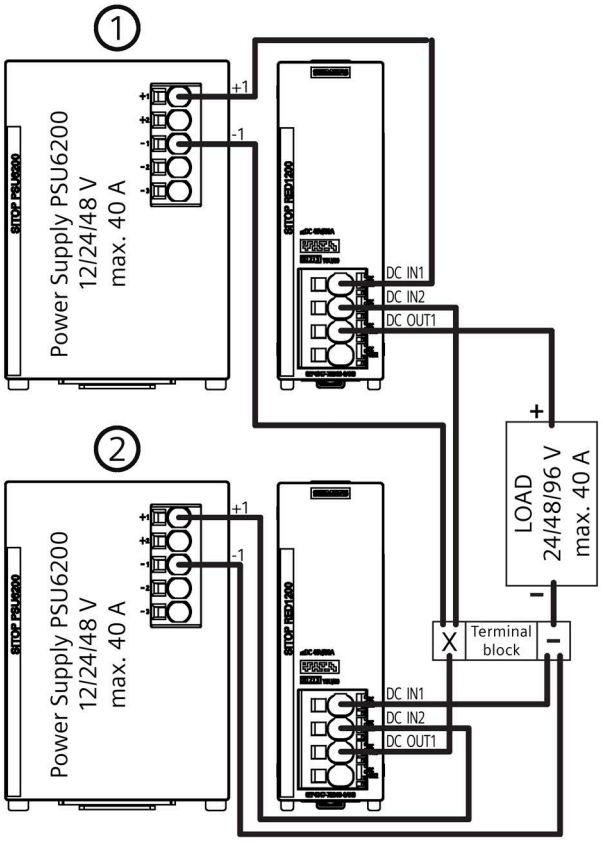

Figure 5-13 Series connection for increased voltage 2

WARNING

SELV (ES1) cannot be guaranteed in the case of a fault

When connecting two power supplies in series, the continuous, permissible SELV (ES1) voltage of maximum 60 V DC according to EN 61204-7 cannot be guaranteed in the case of a fault.

WARNING

SELV (ES1) is not given for a series connection of 48 V devices

When connecting two 48 V power supplies in series, the continuous, permissible SELV (ES1) voltage of maximum 60 V DC according to EN 61204-7 is exceeded.

5.2.1.2 SITOP PSE202U

Output "Out 24 V" of the redundancy module must be connected with the load.

Note

The output cable of the redundancy module must have a cable cross-section that can conduct the maximum total current of both supplying power supplies.

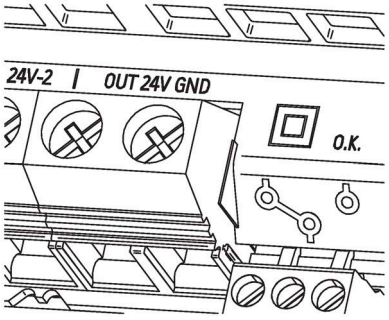

Figure 5-14 Output 6EP1961-3BA21

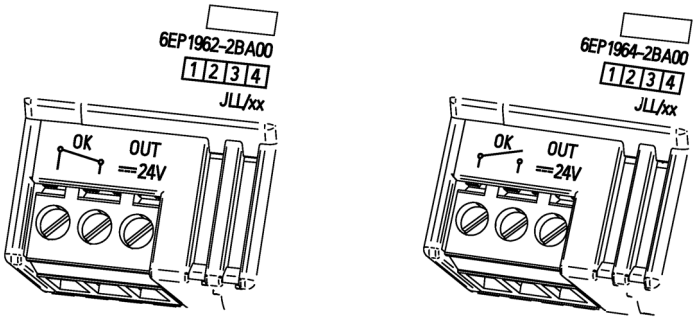

Figure 5-15 Output 6EP1962-2BA00 and 6EP1964-2BA00

The subsequent wiring is recommended for the 6EP1961-3BA21 to guarantee safe and reliable operation of the power supplies in all operating states:

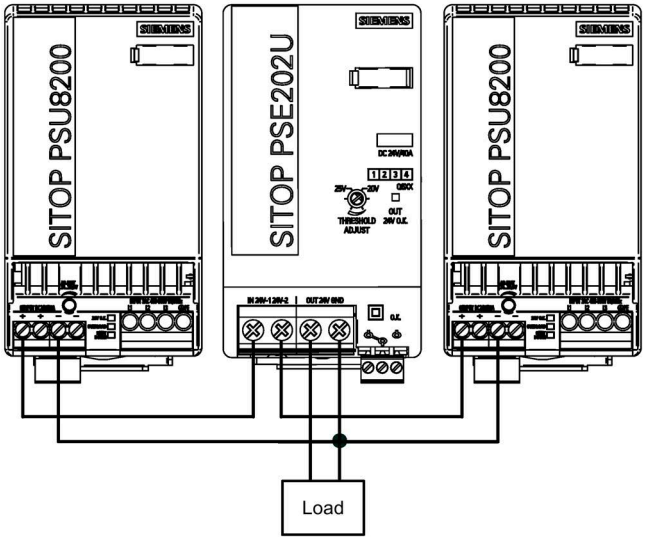

Figure 5-16 Wiring note

5.2.2 Buffer modules

5.2.2.1 SITOP BUF1200

See SITOP BUF1200 (Page 76)

5.2.2.2 SITOP PSE201U

See SITOP PSE201U (Page 76)

5.2.3 Inrush current limiter

5.2.3.1 Logo! ICL230

The power supply to be supplied is connected at the output terminals of the inrush current limiter.

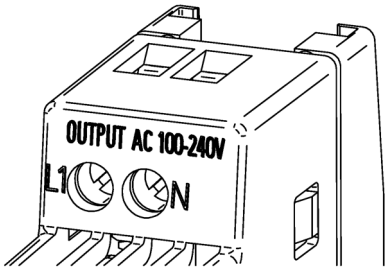

Figure 5-17 Output

5.2.3.2 SITOP inrush current limiter

The power supply to be supplied is connected at the output terminals of the inrush current limiter.

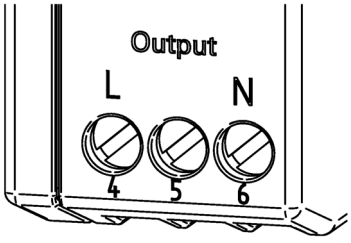

Figure 5-18 Output

Depending on the particular application, the output terminals should be connected as shown in the wiring diagram (see Figure 5-8 Wiring diagram (Page 78))

Note

For 3-phase applications, the N conductor is only connected on the input side to supply the inrush current limiter itself. It is not permissible that N is connected on the output side.

Technical data

6

Note

Technical data apply for a rated input voltage, rated load and 25 °C ambient temperature, if nothing else is specified.

6.1 Input

6.1.1 Redundancy modules

	6EP4346-7RB00-0AX0 **6EP4347-7RB00-0AX0** **6EP4348-7RB00-0AX0** **6EP4347-7RC00-0AX0**	**6EP1961-3BA21**	**6EP1962-2BA00** **6EP1964-2BA00**
Input	DC voltage	DC voltage	DC voltage
Rated input voltage $U_{in\ rated}$	12 - 48 V	24 V	24 V
Voltage range	10 - 58 V	24 - 28.8 V	19 - 29 V

6.1.2 Buffer modules

	6EP4231-7HB00-0AX0 **6EP4231-7HC00-0AX0**	**6EP1961-3BA01**
Input	DC voltage	DC voltage
Rated input voltage $U_{in\ rated}$	24 - 28 V DC	24 V
Voltage range	20 - 30 V DC	24 - 28.8 V
Charging time	Max. 100 s, charging current < 0.5 A	Approx. 60 s

6.1.3 Inrush current limiter

	6EP4683-6LB00-0AY0	**6EP1967-2AA00**
Input	1 and 2-phase AC	1, 2 and 3-phase AC
Rated input voltage $U_{in\ rated}$	100 - 240 V	100 - 480 V
Voltage range	85 - 264 V	85 - 575 V
Line frequency range	47 - 63 Hz	47 - 63 Hz
Maximum input current I_{in}	5 A	10 A
Own consumption	1.5 W/16 mA_{rms} at 230 V	1.5 W/16 mA_{rms} at 230 V
Recommended protection/fusing in the line feeder cable (IEC 898)	Generally, the protective element to be connected upstream can be dimensioned independent of the tripping characteristics, just above the sum of the rated currents of the connected loads. It is not permissible that the rated current of the upstream protective element exceeds 10 A! Please also refer to the operating instructions for the connected device!	For rated input voltages of 120 V and 230 V, generally the miniature circuit breaker can now be dimensioned independent of the tripping characteristics, just above the sum of the rated currents of the connected loads. For rated input voltages of 400 V or 480 V, for characteristic B, the miniature circuit breaker should be dimensioned as a minimum with 5 A and for characteristic C, with 3 A. The rated current of the miniature circuit breaker should not exceed 10 A! Please also refer to the operating instructions for the connected device!

6.2 Output

6.2.1 Redundancy modules

	6EP4346-7RB00-0AX0	**6EP4347-7RB00-0AX0** **6EP4347-7RC00-0AX0**	**6EP4348-7RB00-0AX0**
Output	DC voltage		
Rated output voltage $U_{out\ rated}$	12 - 48 V	12 - 48 V	12 - 48 V
Output voltage	U_{in} - approx. 0.6 V	U_{in} - approx. 0.6 V	U_{in} - approx. 0.6 V
Output current I_{out}	0 - 20 A	0 - 40 A	0 - 80 A
• Remark	120 % $I_{out\ rated}$ in the range -40 ... 45 °C	120 % $I_{out\ rated}$ in the range -40 ... 45 °C	120 % $I_{out\ rated}$ in the range -40 ... 45 °C 60 ... 70 °C derating: 3 % $I_{out\ rated}$/K

	6EP1961-3BA21	**6EP1962-2BA00**	**6EP1964-2BA00**
Output	DC voltage		
Rated output voltage $U_{out\ rated}$	24 V	24 V	24 V
Output voltage	U_{in} - approx. 0.5 V	U_{in} - approx. 0.5 V	U_{in} - approx. 0.5 V
Output current I_{out}	0 - 40 A	0 - 4.3 A (at 19 V U_{out}) 0 - 3.5 A (at 24 V U_{out}) 0 - 2.8 A (at 28.5 V U_{out})	0 - 10 A
• Remark		Max. output power (NEC Class2): 100 VA	

6.2.2 Buffer modules

SITOP BUF1200

	6EP4231-7HB00-0AX0 **6EP4231-7HC00-0AX0**
Output	DC voltage
Output voltage	U_{in} - 0.5 V (± 0.2 V)
Output current (rated value)	40 A

Buffer time:

for 40 A load current: > 300 ms
The maximum possible buffer time is 240 s.

SITOP PSE201U

	6EP1961-3BA01
Output	DC voltage
Output voltage	U_{in} - approx. 1 V
Output current (rated value)	40 A

Buffer time:

for 40 A load current: 200 ms
for 20 A load current: 400 ms
for 10 A load current: 800 ms
for 5 A load current: 1.6 s

When using 6EP1437-3BA10 the buffer time is reduced by 100 ms.

A longer buffer time is achieved for lower load currents. The maximum possible buffer time is 10 seconds.

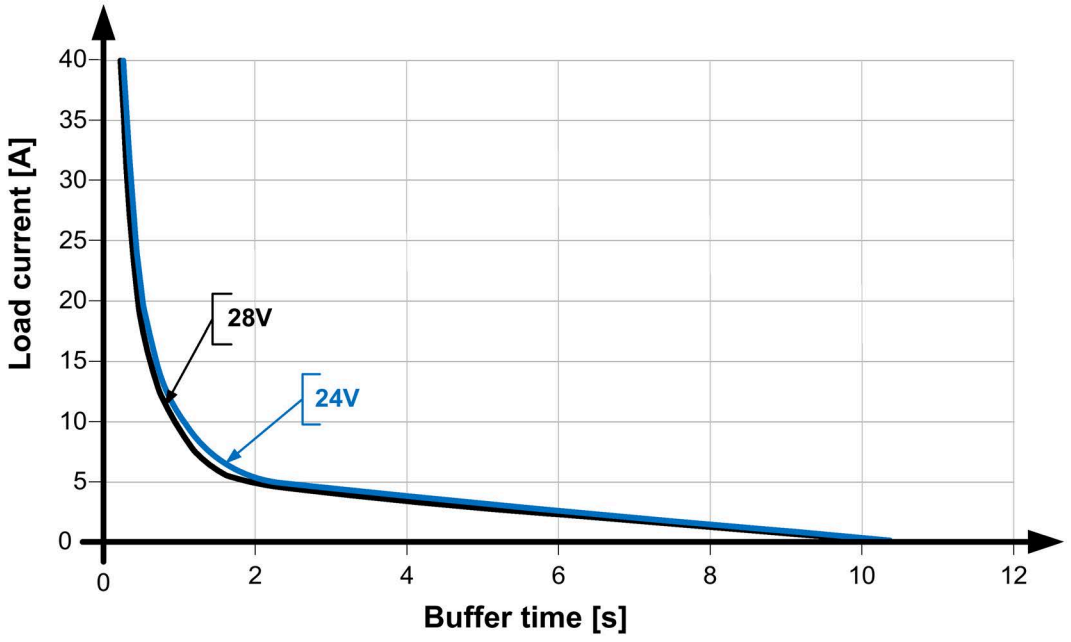

Figure 6-1 Buffer capacity 6EP1961-3BA01

6.2.3 Inrush current limiter

	6EP4683-6LB00-0AY0	**6EP1967-2AA00**
Output	corresponding to the supply voltage	
Rated output voltage $U_{out\ rated}$	corresponding to the supply voltage	
Can be connected in parallel to increase the power rating	No	
Maximum operating current	5 A	10 A
Limiting value starting current	Approx. 10 A at 230 V AC	Approx. 8 A at 230 V AC
Recommended device combinations	All SITOP power supplies	
Several power supplies connected in parallel at an inrush current limiter, 1/2 phase line supply (100 - 230 V AC)	A parallel connection is permissible. It is not permissible that the sum of the maximum operating currents of all of the connected loads exceeds 5 A. The permitted switching frequency is limited to 2 events per minute; whereby, once per hour for the duration of one minute an increased switching frequency is permissible (typically, 30 events per minute). The internal temperature protection may respond if this is not complied with.	A parallel connection is permissible. It is not permissible that the sum of the maximum operating currents of the power supplies exceed 10 A.
2/3 phase line supply (400 - 480 V AC) (3 ph: observe the wiring notes)	-	A parallel connection is permissible. It is not permissible that the sum of the maximum operating currents of the power supplies exceed 10 A. The permitted switching frequency is limited to 1 event per minute. (The internal temperature protection may respond if this is not complied with)

6.3 Protection and monitoring

6.3.1 Redundancy modules

	6EP1962-2BA00
Current limiting	The output switches off for an overload condition. Can be switched on again using the RST button, or by switching both load power supplies off and on again.

6.3.2 Buffer modules

	6EP4231-7HB00-0AX0 **6EP4231-7HC00-0AX0**	**6EP1961-3BA01**
Static current limiting, typ.	40 A	40 A
Reverse polarity protection	Yes	Yes

6.3.3 Inrush current limiter

	6EP4683-6LB00-0AY0
Short-circuit protection	Ensure by using an upstream protective element
Type of response threshold value setting	Switching frequency is max. 2 events per minute. Increased switching frequency limited from a time perspective to once per hour for one minute (typ. 30 events per minute).
Characteristic of the electronic overload shutdown	Non-reversible thermal protection

	6EP1967-2AA00
Short-circuit protection	Ensure by using an upstream protective element

6.4 Mechanical system

6.4.1 Redundancy modules

	6EP4346-7RB00-0AX0	**6EP4347-7RB00-0AX0 6EP4347-7RC00-0AX0**	**6EP4348-7RB00-0AX0**	**6EP1961-3BA21**	**6EP1962-2BA00 6EP1964-2BA00**
Connection system	Spring-loaded terminal	Spring-loaded terminal	Spring-loaded terminal	Screw connection	Screw connection
Connections	Input, output: 1 spring-loaded terminal each for 0.2 - 10 mm² solid/finely stranded	Input, output: 1 spring-loaded terminal each for 0.75 - 16 mm² solid and 0.75 - 25 mm² finely stranded	Input, output: 1 spring-loaded terminal each for 0.75 - 16 mm² solid and 0.75 - 25 mm² finely stranded	Input, output and ground: 1 screw terminal each for 0.5 - 16 mm² solid/finely stranded	Input, output and ground: removable screw terminal, 1 screw terminal each for 0.5 - 2.5 mm² solid/finely stranded
Connections: Auxiliary contacts	-	-	-	Relay contact: 1 screw terminal each for 0.2 - 2.5 mm² solid/finely stranded	Relay contact: 1 screw terminal each (removable) for 0.5 to 2.5 mm² solid/finely stranded
Width of the housing	35 mm	45 mm	45 mm	70 mm	30 mm
Height of the housing	135 mm	135 mm	135 mm	125 mm	80 mm
Depth of the housing	125 mm	125 mm	155 mm	120.1 mm	100 mm
Mounting width	35 mm	45 mm	45 mm	70 mm	30 mm
Mounting height	225 mm	225 mm	225 mm	225 mm	180 mm
Weight, approx.	0.47 kg	0.50 kg	1.01 kg	0.5 kg	0.125 kg
Product feature of the housing: housings can be lined up next to one another	Yes	Yes	Yes	Yes	Yes
Mounting type: Wall/panel mounting	No	No	No	No	No
Mounting type: Rail mounting	Yes	Yes	Yes	Yes	Yes
Mounting type: S7-300 rail mounting	No	No	No	No	No
Mounting	Can be snapped onto a standard mounting rail TH35-15/7.5 (EN 60715)	Can be snapped onto a standard mounting rail TH35-15/7.5 (EN 60715)	Can be snapped onto a standard mounting rail TH35-15/7.5 (EN 60715)	Can be snapped onto a standard mounting rail TH35-15/7.5 (EN 60715)	Can be snapped onto a standard mounting rail TH35-15/7.5 (EN 60715)

6.4.2 Buffer modules

	6EP4231-7HB00-0AX0 **6EP4231-7HC00-0AX0**	**6EP1961-3BA01**
Connection system	Spring-loaded terminal	Screw connection
Connections: Input	+: 1 spring-loaded terminal for 0.75 - 16 mm² solid/finely stranded	+: 1 screw terminal for 0.5 - 16 mm² solid/finely stranded
Connections: Output	-: 1 spring-loaded terminal for 0.75 - 16 mm² solid/finely stranded	-: 1 screw terminal for 0.5 - 16 mm² solid/finely stranded
Width of the housing	70 mm	70 mm
Height of the housing	135 mm	125 mm
Depth of the housing	155 mm	120.9 mm
Mounting width	70 mm	70 mm
Mounting height	225 mm	225 mm
Weight, approx.	1.5 kg	1.2 kg
Product feature of the housing: housings can be lined up next to one another	Yes	Yes
Mounting type: Wall/panel mounting	No	No
Mounting type: Rail mounting	Yes	Yes
Mounting type: S7-300 rail mounting	No	No
Mounting	Can be snapped onto standard TH35-15/7,5 mounting rails (EN 60715)	Can be snapped onto standard TH35-15/7,5 mounting rails (EN 60715)

6.4.3 Inrush current limiter

	6EP4683-6LB00-0AY0	**6EP1967-2AA00**
Connection system	Screw connection	Screw connection
Connections: Line input	L, N 1 screw terminal each for 0.5 - 2.5 mm² solid/finely stranded	L, N 1 screw terminal each for 0.5 - 2.5 mm² solid/finely stranded
Connections: Output	+, -, N 1 screw terminal each for 0.5 - 2.5 mm² solid/finely stranded	L, N 1 screw terminal each for 0.5 - 2.5 mm² solid/finely stranded
Width of the housing	18 mm	22.5 mm
Height of the housing	90 mm	80 mm
Depth of the housing	53 mm	86.6 mm
Mounting width	18 mm	22.5 mm
Mounting height	130 mm	180 mm
Weight, approx.	0.14 kg	0.12 kg
Product feature of the housing: housings can be lined up next to one another	Yes	Yes
Mounting type: Wall/panel mounting	Yes	No
Mounting type: Rail mounting	Yes	Yes
Mounting type: S7-300 rail mounting	No	No
Mounting	Can be snapped onto a standard mounting rail TH35-15/7,5 (EN 60715) or for wall/panel mounting with withdrawable mounting lugs	Can be snapped onto standard TH35-15/7,5 mounting rails (EN 60715)

6.5 Accessories

6.5.1 Redundancy modules

	6EP1962-2BA00 **6EP1964-2BA00**
Electrical accessories	Removable 6EP1971-5BA00 spring-loaded terminal

6.6 Dimension drawing

6.6.1 Redundancy modules

See chapter Redundancy modules (Page 36)

CAD data that can be downloaded from the Internet:

6EP4346-7RB00-0AX0
(http://www.automation.siemens.com/bilddb/index.aspx?objKey=G_KT01_XX_01519)

6EP4347-7RB00-0AX0
(http://www.automation.siemens.com/bilddb/index.aspx?objKey=G_KT01_XX_01522)

6EP4348-7RB00-0AX0
(http://www.automation.siemens.com/bilddb/index.aspx?objKey=G_KT01_XX_01880)

6EP4347-7RC00-0AX0
(http://www.automation.siemens.com/bilddb/index.aspx?objKey=G_KT01_XX_01877)

6EP1961-3BA21
(http://www.automation.siemens.com/bilddb/index.aspx?objKey=G_KT01_XX_00529)

6EP1962-2BA00
(http://www.automation.siemens.com/bilddb/index.aspx?objKey=G_KT01_XX_00710)

6EP1964-2BA00
(http://www.automation.siemens.com/bilddb/index.aspx?objKey=G_KT01_XX_00713)

6.6.2 Buffer modules

See chapter Buffer modules (Page 40)

CAD data that can be downloaded from the Internet:

6EP4231-7HB00-0AX0
(http://www.automation.siemens.com/bilddb/index.aspx?objKey=G_KT01_XX_01682)

6EP4231-7HC00-0AX0
(http://www.automation.siemens.com/bilddb/index.aspx?objKey=G_KT01_XX_01874)

6EP1961-3BA01
(http://www.automation.siemens.com/bilddb/index.aspx?objKey=G_KT01_XX_00532)

6.6.3 Inrush current limiter

See chapter Inrush current limiter (Page 42)

CAD data that can be downloaded from the Internet:

6EP4683-6LB00-0AY0
(http://www.automation.siemens.com/bilddb/index.aspx?objKey=G_KT01_XX_01483)

6EP1967-2AA00
(http://www.automation.siemens.com/bilddb/index.aspx?objKey=G_KT01_XX_00349)

Safety, approvals, EMC

7

7.1 Safety

	6EP4346-7RB00-0AX0 **6EP4347-7RB00-0AX0** **6EP4348-7RB00-0AX0** **6EP4347-7RC00-0AX0**	**6EP1961-3BA21** **6EP1962-2BA00** **6EP1964-2BA00**
Electrical isolation	-	Yes, SELV (ES1) acc. to EN 61204-7 (relay contact)
Protection class	Class III	Class III
Degree of protection (EN 60529)	IP 20	IP 20

	6EP4231-7HB00-0AX0 **6EP4231-7HC00-0AX0** **6EP1961-3BA01**	**6EP4683-6LB00-0AY0** **6EP1967-2AA00**
Electrical isolation	-	-
Protection class	Class III	Class II
Degree of protection (EN 60529)	IP 20	IP 20

7.2 Approvals

7.2.1 SITOP RED1200

	6EP4346-7RB00-0AX0 6EP4347-7RB00-0AX0 6EP4348-7RB00-0AX0	**6EP4347-7RC00-0AX0**
CE marking	Yes, (2014/30/EU and 2011/65/EU)	Yes, (2014/30/EU, 2011/65/EU and 2014/34/EU)
CB certificate	Yes	
CB scheme	IEC 62368-1	
UL/cUL approval	cULus-listed (UL 508, CSA 22.2 No. 107.1), File E197259	
cCSAus approval	Yes, CSA C22.2 No. 62368-1	
Explosion protection	-	Yes
ATEX approval	-	II 3G Ex ec IIC T4 Gc (EPS 21 ATEX 1 194 X)
IECEex approval	-	Yes (IECEx EPS 21.0059X)
cULus HazLoc approval	-	cULus HazLoc Class I, Div 2, Group A,B,C,D T4
CCC HazLoc approval	-	Available soon
UKCA HazLoc approval	-	Yes
Marine approvals	ABS (DNV available soon)	
UKCA marking	Yes	
RCM approval	Yes	
EAC approval	Yes	
SONCAP certificate	Yes	

7.2.2 SITOP PSE202U

	6EP1961-3BA21	**6EP1962-2BA00**	**6EP1964-2BA00**
CE marking	Yes, (2014/30/EU and 2011/65/EU)		
UL/cUL approval	cULus-listed (UL 508, CSA 22.2 No. 107.1), File E197259	cULus-listed (UL 508, CSA 22.2 No. 107.1), File E197259 UL-R/C (UL 60950-1, NEC class 2), File E151273	cULus-listed (UL 508, CSA 22.2 No. 107.1), File E197259
Marine approvals	DNV, ABS	-	-
UKCA marking	Yes		
SONCAP certificate	Yes		

7.2.3 Buffer modules

	6EP4231-7HB00-0AX0	**6EP1961-3BA01**	**6EP4231-7HC00-0AX0**
CE marking	Yes, (2014/30/EU and 2011/65/EU)		Yes, (2014/30/EU, 2011/65/EU and 2014/34/EU)
CB certificate	Yes		
CB scheme	IEC 62368-1		
UL/cUL approval	cULus-listed (UL 508, CSA 22.2 No. 107.1), File E197259		
cCSAus approval	Yes, CSA C22.2 No. 62368-1		
Explosion protection	-	-	Yes
ATEX approval	-	-	II 3G Ex ec IIC T4 Gc (EPS 21 ATEX 1 194 X)
IECEex approval	-	-	Yes (IECEx EPS 21.0059X)
cULus HazLoc approval	-	-	cULus HazLoc Class I, Div 2, Group A,B,C,D T4
CCC HazLoc approval	-	-	Available soon
UKCA HazLoc approval	-	-	Yes
Marine approvals	ABS (DNV available soon)	DNV, ABS	ABS (DNV available soon)
UKCA marking	Yes		
RCM approval	Yes		
EAC approval	Yes		
SONCAP certificate	Yes		

7.2.4 Inrush current limiter

	6EP4683-6LB00-0AY0 **6EP1967-2AA00**
CE marking	Yes, (2014/35/EU, 2014/30/EU and 2011/65/EU)
UL/cUL approval	cULus-listed (UL 508, CSA 22.2 No. 107.1), File E197259
UKCA marking	Yes
SONCAP certificate	Yes

7.3 EMC

7.3.1 SITOP RED1200

		6EP4346-7RB00-0AX0 6EP4347-7RB00-0AX0 6EP4348-7RB00-0AX0 6EP4347-7RC00-0AX0
Electrostatic discharge	EN 61000-4-2	8 kV contact, 8 kV air
High-speed transient disturbance variables (burst)	EN 61000-4-4	2 kV at DC input 2 kV at DC output
Surge voltages	EN 61000-4-5	0.5 kV asymmetrical on DC output cables
Generic standards	EN 61000-6-2	Interference immunity for industrial environments (only for tests applicable for the device)

7.3.2 PSE202U

		6EP1961-3BA21	**6EP1962-2BA00 6EP1964-2BA00**
Electrostatic discharge	EN 61000-4-2	4 kV contact	6 kV contact, 8 kV air
Electromagnetic fields	EN 61000-4-3	30 - 2000 MHz 3 V/m	80 - 6000 MHz 10 V/m, 1000 - 2700 MHz 10 V/m
High-speed transient disturbance variables (burst)	EN 61000-4-4	1 kV at the DC output 1 kV on the signal cable	2 kV at the DC input 2 kV at the DC output 2 kV on the signal cable
Surge voltages	EN 61000-4-5	1 kV at the DC output 1 kV on the signal cable	
High-frequency fields	EN 61000-4-6	3 V; 0.15 - 80 MHz	10 V; 0.15 - 80 MHz
Magnetic fields	EN 61000-4-8	30 A/m; 50 Hz	30 A/m; 50 Hz
Emitted interference	EN 55022 (corresponds to EN 55032)	Class B	-
Generic standards	EN 61000-6-2	-	Noise immunity for industrial environments
	EN 61000-6-3	-	Interference emission for residential areas

7.3.3 Buffer modules

		6EP4231-7HB00-0AX0 **6EP4231-7HC00-0AX0**	**6EP1961-3BA01**
Electrostatic discharge	EN 61000-4-2	8 kV contact, 8 kV air	
Electromagnetic fields	EN 61000-4-3	80 - 1000 MHz 10 V/m, 900 MHz ± 5 MHz 10 V/m	80 - 1000 MHz 50 V/m, 900 MHz ± 5 MHz 10 V/m
High-speed transient disturbance variables (burst)	EN 61000-4-4	2 kV at DC output	Tested with power supply 6EP1436-3BA00: 4 kV at upstream power supply 2 kV at DC output
Surge voltages	EN 61000-4-5	0.5 kV symmetrical/asymmetrical on DC output cables	Tested with power supply 6EP1436-3BA00: 3 kV symmetrical at the power supply input 3 kV asymmetrical at the power supply input 0.5 kV symmetrical/asymmetrical on DC output cables/conductors
High-frequency fields	EN 61000-4-6	10 V; 0.15 - 80 MHz	
Generic standards	EN 61000-6-2	Noise immunity for industrial environments	

7.3.4 Inrush current limiter

		6EP4683-6LB00-0AY0	**6EP1967-2AA00**
Electrostatic discharge	EN 61000-4-2	8 kV contact, 8 kV air	
Electromagnetic fields	EN 61000-4-3	80 - 1000 MHz 10 V/m, 1400 - 2000 MHz 3 V/m, 2000 - 2700 MHz 1 V/m, 900 MHz ±5 MHz and 1.89 GHz 10 V/m	80 - 1000 MHz 20 V/m, 1400 - 2000 MHz 3 V/m, 2000 - 2700 MHz 1 V/m, 900 MHz ±5 MHz 10 V/m
High-speed transient disturbance variables (burst)	EN 61000-4-4	2 kV at input/output	4 kV at input/output
Surge voltages	EN 61000-4-5	1 kV symmetrical at input/output	3 kV symmetrical at input/output
High-frequency fields	EN 61000-4-6	10 V; 0.15 - 80 MHz	
Magnetic fields	EN 61000-4-8	-	30 A/m; 50 Hz
Line harmonics limit	EN 61000-3-2	Class A	
Generic standards	EN 61000-6-2	Noise immunity for industrial environments	
	EN 61000-6-3	Interference emission for residential areas	

Ambient conditions

	6EP4346-7RB00-0AX0 **6EP4347-7RB00-0AX0** **6EP4348-7RB00-0AX0** **6EP4347-7RC00-0AX0** **6EP4231-7HB00-0AX0** **6EP4231-7HC00-0AX0** **6EP1961-3BA01**	**6EP1961-3BA21** **6EP1967-2AA00**	**6EP4683-6LB00-0AY0**	**6EP1962-2BA00** **6EP1964-2BA00**
Ambient temperature	-40 ... 70 °C for natural convection (self convection)	-25 ... 60 °C for natural convection (self convection)	-40 ... 70 °C for natural convection (self convection)	-20 ... 70 °C for natural convection (self convection)
	Tested according to: • EN 60068-2-1 Cold • EN 60068-2-2 Dry heat • EN 60068-2-78 Humid heat, constant • EN 60068-2-14 Temperature change			
Transport and storage temperature	-40 ... 85 °C Tests (packed for shipping) according to: • EN 60068-2-1 Cold • EN 60068-2-2 Dry heat • EN 60068-2-30 Humid heat, cyclic			
Humidity class	Climatic class 3K3 according to EN 60721, 5 - 95 % no condensation			
Degree of pollution	2			
Mechanical stressing in operation	• Tested according to EN 60068-2-6 vibration, test Fc:			
	3.5 mm deflection in the range 5 - 8.4 Hz 2 g acceleration in the range 8.4 - 150 Hz			3.5 mm deflection in the range 5 - 8.4 Hz 1.3 g acceleration in the range 8.4 – 50 Hz
	• Tested according to EN 60068-2-27 shock, test Ea: acceleration 150 m/s^2, test duration 11 ms			

	6EP4346-7RB00-0AX0 **6EP4347-7RB00-0AX0** **6EP4348-7RB00-0AX0** **6EP4347-7RC00-0AX0** **6EP4231-7HB00-0AX0** **6EP4231-7HC00-0AX0** **6EP1961-3BA01**	**6EP1961-3BA21** **6EP1967-2AA00**	**6EP4683-6LB00-0AY0**	**6EP1962-2BA00** **6EP1964-2BA00**
Damaging gases	Tested according to: • EN 60068-2-42 sulfur dioxide • EN 60068-2-43 hydrogen sulfide			
Atmospheric pressure	Operation: • 1080 - 795 hPa (-1000 - 2000 m) • For operation at altitudes of 2000 m up to 6000 m above sea level: output must be derated by -7.5% / 1000 m or the ambient temperature must be reduced by 5 K / 1000 m see Figure 4-7 Altitude derating (Page 58) • Overvoltage category: II up to 2000 m (EN 61204-7) I from 2000 m up to 6000 m (EN 61204-7) Storage: • 1080 - 660 hPa (-1000 - 3500 m)			

Applications

9

9.1 Redundancy circuit for increased system availability

SITOP PSE202U redundancy modules provide additional protection against the failure of 24 V supplies. By decoupling two power supplies through a redundancy module, a power supply that fails does not influence the 24 V supply. The redundancy module continuously monitors the feeding power supplies, and when one device fails, the other one automatically takes over the complete load circuit supply. In addition, a signal contact sends a signal, which can be evaluated by a controller, a PC or a control system.

Note

To implement 100% redundancy, the supply via the primary side of the power supply must also be redundantly implemented; this means that each power supply must be separately protected using a fuse or a miniature circuit breaker.

When using 1-phase power supplies, the supply should be implemented using different phases, e.g. if a three-phase line supply is available.

Redundancy of two power supplies with maximum rated output currents of 5 A

Two power supplies with maximum rated output currents of 5 A can be decoupled through a SITOP PSE202U 10 A redundancy module (6EP1964-2BA00). To do this, outputs "+" of the power supplies are connected to inputs "IN 24 V-1" and "IN 24 V-2 of the redundancy module, output "OUT 24 V" of the redundancy module is connected to the load circuit.

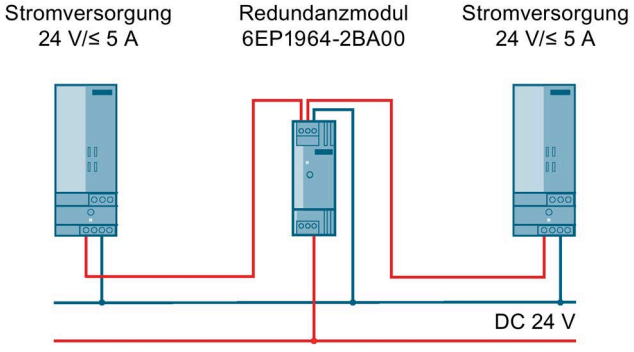

Figure 9-1 Redundancy of two power supplies with maximum rated output currents of 5 A

Redundancy of two power supplies with maximum rated output currents of 10 A

Two power supplies with maximum rated output currents of 10 A can be decoupled through two SITOP PSE202U 10 A redundancy modules (6EP1964-2BA00). To do this, output "+" of each power supply is connected to both inputs of a redundancy module ("IN 24 V-1" and "IN 24 V-2" jumpered); outputs "OUT 24 V" of the two redundancy modules must be connected in parallel through an external connection (terminal) and connected to the load circuit.

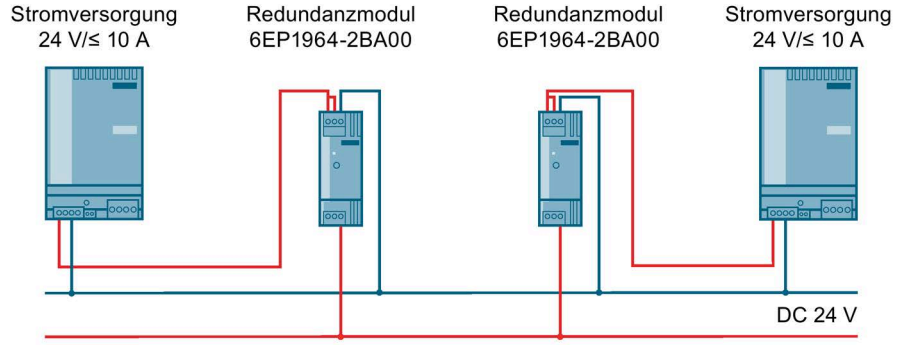

Figure 9-2 Redundancy of two power supplies with maximum rated output currents of 10 A

Redundancy of two power supplies with maximum rated output currents of 20 A

Two power supplies with maximum rated output currents of 20 A can be decoupled through a SITOP PSE202U 40 A redundancy module (6EP1961-3BA21). To do this, outputs "+" of the power supplies are connected to inputs "IN 24 V-1" and "IN 24 V-2 of the redundancy module, output "OUT 24 V" of the redundancy module is connected to the load circuit.

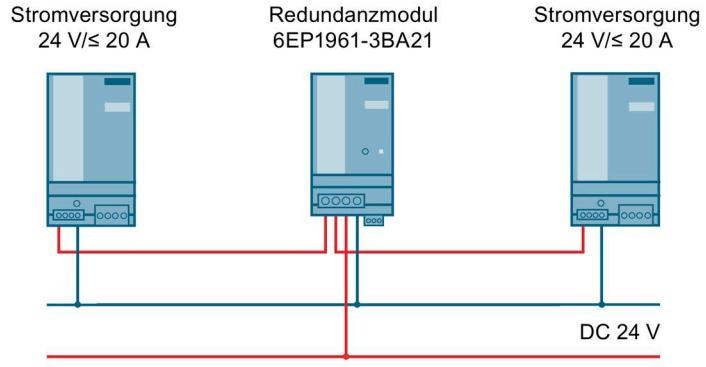

Figure 9-3 Redundancy of two power supplies with maximum rated output currents of 20 A

Redundancy of two power supplies with maximum rated output currents of 40 A

Two power supplies with maximum rated output currents of 40 A can be decoupled through two SITOP PSE202U 40 A redundancy modules (6EP1961-3BA21). To do this, output "+" of each power supply is connected to both inputs of a redundancy module ("IN 24 V-1" and "IN 24 V-2" jumpered); outputs "OUT 24 V" of the two redundancy modules must be connected in parallel through an external connection (terminal) and connected to the load circuit.

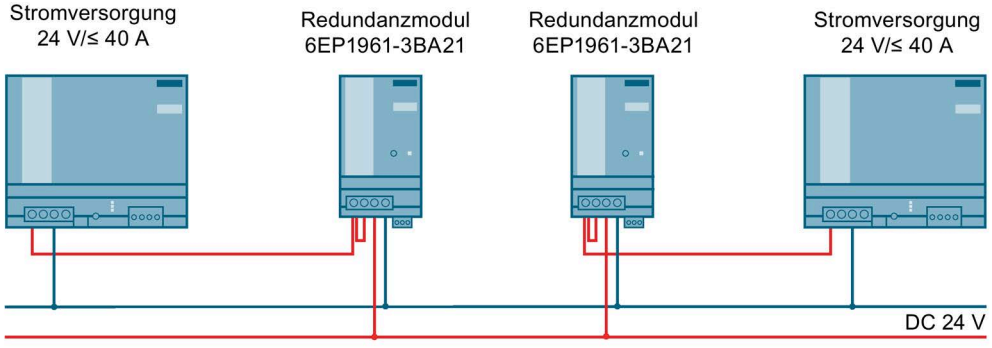

Figure 9-4 Redundancy of two power supplies with maximum rated output currents of 40 A

9.2 Design of 24 V load feeders with power limiting according to NEC class2

A 24 V power supply with power limiting according to NEC class2 can be implemented using a SITOP PSE202U Class2 redundancy module (6EP1962-2BA00). To implement this, output "+" of the power supply is connected to both inputs of a redundancy module ("IN 24 V-1" and "IN 24 V-2" jumpered); the output power of the load circuit at output "OUT 24 V" of the redundancy module is limited to 100 VA. Several load circuits connected in parallel, whose output power is limited, can be implemented with several redundancy modules.

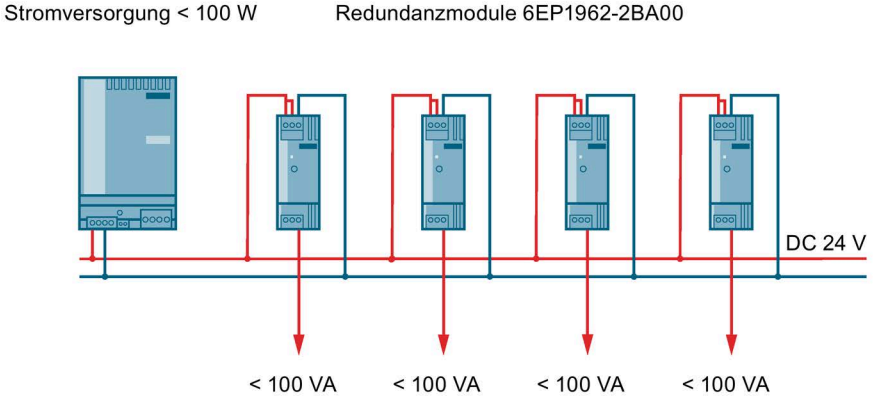

Figure 9-5 Design of 24 V load feeders with power limiting according to NEC class2

Note

The feeding SITOP power supply must be certified according to UL60950-1.

9.3 Protection against short-time voltage dips

For a drop in the line-side supply voltage, the 24 V power supply still maintains the output voltage for a short time in the millisecond range (see Chapter Technical data (Page 87)).

For line supplies that manifest frequent brief voltage dips, in order to increase the power supply reliability, it may make sense to increase the line buffering time in the device using an additional SITOP PSE201U buffer module.

The SITOP PSE201U buffer module, based on electrolytic capacitors, is connected in parallel to the power supply output (Figure 9-6 Buffering brief power failures using the SITOP PSE201U buffer module (Page 111)). The buffer time is 200 ms at 40 A up to 1.6 s for a load current of 5 A. This time can be increased a multiple number of times by connecting buffer modules in parallel; the maximum buffer time is 10 s.

You can find additional information at:

Manual SITOP expansion modules
(https://support.industry.siemens.com/cs/ww/en/view/109768676)

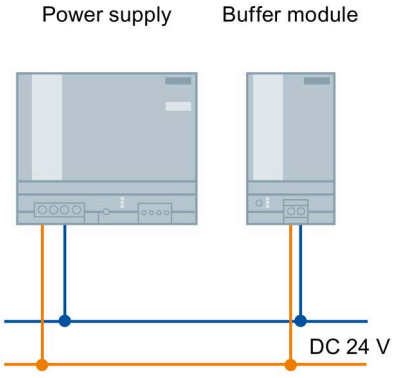

Figure 9-6 Buffering brief power failures using the SITOP PSE201U buffer module

Environment

10

The devices are in conformance with RoHS.

Only substances in conformance with PWIS are used (paint-wetting impairment substances).

Disposal guidelines



Packaging and packaging aids can and should always be recycled. The product itself may not be disposed of as domestic refuse.

Service & Support 11

Service & Support Portal

On the main support page, you can find a wealth of useful information about the range of services we offer, documents, downloads and much more:
Industry Online Support (https://support.industry.siemens.com)

Technical support

You can access technical support through the following communication channels:

- Internet:
  Web form for support request (http://www.siemens.com/SupportRequest)
- Smartphone:
  Siemens Industry Online Support App
  (https://new.siemens.com/global/en/products/software/mobile-apps/industry-online-support.html)

Technical documentation on the Internet

Operating instructions and manuals for SITOP are available in the Internet:
Operating instructions/manuals (https://www.siemens.com/sitop-manuals)

SITOP power supply homepage

Current information about our power supplies is available in the Internet at the SITOP home page:
SITOP (http://www.siemens.com/sitop)

Texts for invitation to tender

You can find invitation to tender texts for SITOP power supplies here:
Link to the portal (http://www.siemens.de/ausschreibungstexte)

CAx data

You can find 2D-/3D data, devices circuit diagrams according to IEC and ANSI as well as EPLAN macros as download in the Internet:
Siemens image database (http://www.siemens.com/sitop-cax)

Request all CAx data via the CAx download manager:
CAx shopping cart (http://www.siemens.com/cax)

TIA Selection Tool

Simply and quickly select the optimum power supply, add-on modules and DC-UPS:
TIA Selection Tool cloud (http://www.siemens.com/tst-powersupply)

In addition, the 24 V load view in the TIA Selection Tool allows you to simply select the power supply for your particular project as the current demand of the automation products being

supplied is automatically calculated.
Download the TIA Selection Tool (http://www.siemens.de/tia-selection-tool-standalone)

Online catalog and ordering system

The online catalog and the online ordering system are available through the Industry Mall homepage:
Industry Mall (http://www.siemens.com/industrymall/de)

Contact persons

If you have any questions regarding the use of our products, then contact the Siemens contact person in your regional Siemens sales office.

You can find these addresses as follows:

- Internet (http://www.automation.siemens.com/partner)
- Industry Mall (http://www.siemens.com/industrymall/de)