SIEMENS

Data sheet 8UD1741-0AB25

Handle with masking frame Emergency stop with tolerance compensation Accessory for: 3VA1/2 1000



Model	
product brand name	SENTRON
length of handle	140 mm

General Product Approval	Declaration of Conformity	Marine / Shipping	other
EAC	CE EG-Konf.	Lloyd's Register LRS	Miscellaneous

Further information

Information- and Downloadcenter (Catalogs, Brochures,…)
http://www.siemens.com/lowvoltage/catalogs

Industry Mall (Online ordering system)
https://mall.industry.siemens.com/mall/en/en/Catalog/product?mlfb=8UD1741-0AB25

Service&Support (Manuals, Certificates, Characteristics, FAQs,...)
https://support.industry.siemens.com/cs/ww/en/ps/8UD1741-0AB25

Image database (product images, 2D dimension drawings, 3D models, device circuit diagrams, ...)
http://www.automation.siemens.com/bilddb/cax_en.aspx?mlfb=8UD1741-0AB25

CAx-Online-Generator
http://www.siemens.com/cax

Subject to change without notice
© Copyright Siemens

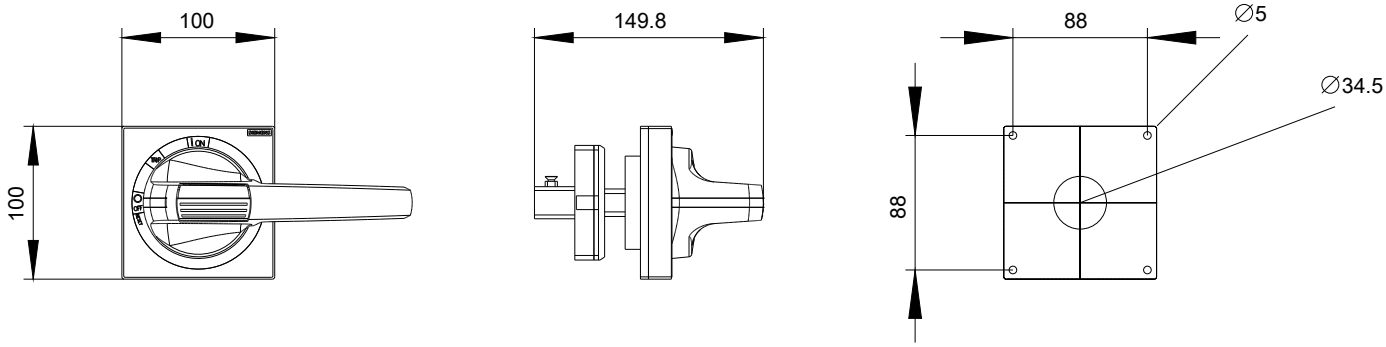

Subject to change without notice
© Copyright Siemens

Subject to change without notice
© Copyright Siemens