SIEMENS

Data sheet US2:40JG32AG



Non-reversing NEMA contactor, Size 4, Three phase full voltage, Contactor amp rating 135A, 3 wire (NO aux included), 190-220/220-240V 50/60Hz coil, Non-combination type, Enclosure NEMA type (open), No enclosure

product brand name	Class 40
design of the product	Non-reversing contactor
special product feature	Gravity dropout contacts; 45 degree, wedge action contacts; Self-rising pressure type control terminals; Encapsulated coil
General technical data	
weight [lb]	9 lb(av)
Height x Width x Depth [in]	7.82 × 6.75 × 5.75 in
touch protection against electrical shock	Not finger-safe
installation altitude [ft] at height above sea level maximum	6560 ft
ambient temperature [°F]	
● during storage	-22 ... +149 °F
● during operation	-4 ... +104 °F
ambient temperature	
● during storage	-30 ... +65 °C
● during operation	-20 ... +40 °C
country of origin	Mexico
Horsepower ratings	
yielded mechanical performance [hp] for 3-phase AC motor	
● at 200/208 V rated value	40 hp
● at 220/230 V rated value	50 hp
● at 460/480 V rated value	100 hp
● at 575/600 V rated value	100 hp
Contactor	
size of contactor	NEMA controller size 4
number of NO contacts for main contacts	3
operating voltage for main current circuit at AC at 60 Hz maximum	600 V
operational current at AC at 600 V rated value	135 A
mechanical service life (operating cycles) of the main contacts typical	5000000
Auxiliary contact	
number of NC contacts at contactor for auxiliary contacts	0
number of NO contacts at contactor for auxiliary contacts	1
number of total auxiliary contacts maximum	7
contact rating of auxiliary contacts of contactor according to UL	10A@600VAC (A600), 2.5A@300VDC (Q300)
Coil	
type of voltage of the control supply voltage	AC
control supply voltage	
● at AC at 50 Hz rated value	190 ... 220 V
● at AC at 60 Hz rated value	220 ... 240 V
holding power at AC minimum	22 W

Subject to change without notice
© Copyright Siemens

apparent pick-up power of magnet coil at AC	510 VA
apparent holding power of magnet coil at AC	51 VA
operating range factor control supply voltage rated value of magnet coil	0.85 ... 1.1
percental drop-out voltage of magnet coil related to the input voltage	50 %
ON-delay time	18 ... 34 ms
OFF-delay time	10 ... 12 ms
Enclosure	
degree of protection NEMA rating of the enclosure	Open device (no enclosure)
design of the housing	NA
Mounting/wiring	
mounting position	Vertical
fastening method	Surface mounting and installation
type of electrical connection for supply voltage line-side	Box lug
tightening torque [lbf·in] for supply	200 ... 200 lbf·in
type of connectable conductor cross-sections at line-side for AWG cables single or multi-stranded	1x (6 AWG ... 250 MCM)
temperature of the conductor for supply maximum permissible	75 °C
material of the conductor for supply	CU
type of electrical connection for load-side outgoing feeder	Box lug
tightening torque [lbf·in] for load-side outgoing feeder	200 ... 200 lbf·in
type of connectable conductor cross-sections for AWG cables for load-side outgoing feeder single or multi-stranded	1x (6 AWG ... 250 MCM)
temperature of the conductor for load-side outgoing feeder maximum permissible	75 °C
material of the conductor for load-side outgoing feeder	CU
type of electrical connection of magnet coil	Screw-type terminals
tightening torque [lbf·in] at magnet coil	5 ... 12 lbf·in
type of connectable conductor cross-sections of magnet coil for AWG cables single or multi-stranded	2x (16 ... 12 AWG)
temperature of the conductor at magnet coil maximum permissible	75 °C
material of the conductor at magnet coil	CU
type of electrical connection at contactor for auxiliary contacts	Screw-type terminals
tightening torque [lbf·in] at contactor for auxiliary contacts	10 ... 15 lbf·in
type of connectable conductor cross-sections at contactor for AWG cables for auxiliary contacts single or multi-stranded	1x (12 AWG), 2x (16 ... 14 AWG), 2x (18 ... 16 AWG)
temperature of the conductor at contactor for auxiliary contacts maximum permissible	75 °C
material of the conductor at contactor for auxiliary contacts	CU
Short-circuit current rating	
design of the fuse link for short-circuit protection of the main circuit required	10kA@600V (Class H or K); 100kA@600V (Class R or J)
design of the short-circuit trip	Thermal magnetic circuit breaker
maximum short-circuit current breaking capacity (Icu)	
• at 240 V	10 A
• at 480 V	10 A
• at 600 V	10 A
certificate of suitability	NEMA ICS 2; UL 508; CSA 22.2, No.14
Approvals Certificates	
Test Certificates	

UL

Further information

Industrial Controls - Product Overview (Catalogs, Brochures,…)
www.usa.siemens.com/iccatalog
Industry Mall (Online ordering system)
https://mall.industry.siemens.com/mall/en/us/Catalog/product?mlfb=US2:40JG32AG
Service&Support (Manuals, Certificates, Characteristics, FAQs,...)

© Copyright Siemens

https://support.industry.siemens.com/cs/US/en/ps/US2:40JG32AG

Image database (product images, 2D dimension drawings, 3D models, device circuit diagrams, EPLAN macros, ...)
http://www.automation.siemens.com/bilddb/cax_de.aspx?mlfb=US2:40JG32AG&lang=en

Certificates/approvals
https://support.industry.siemens.com/cs/US/en/ps/US2:40JG32AG/certificate

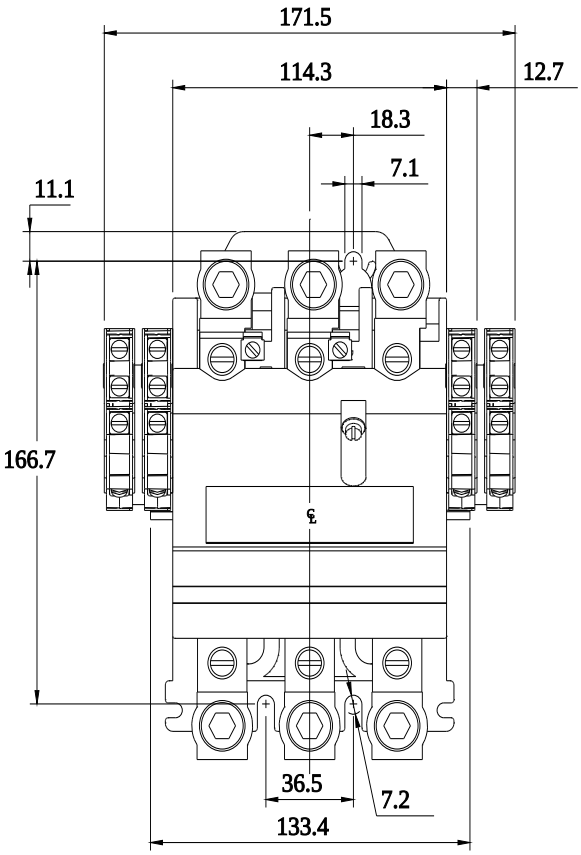

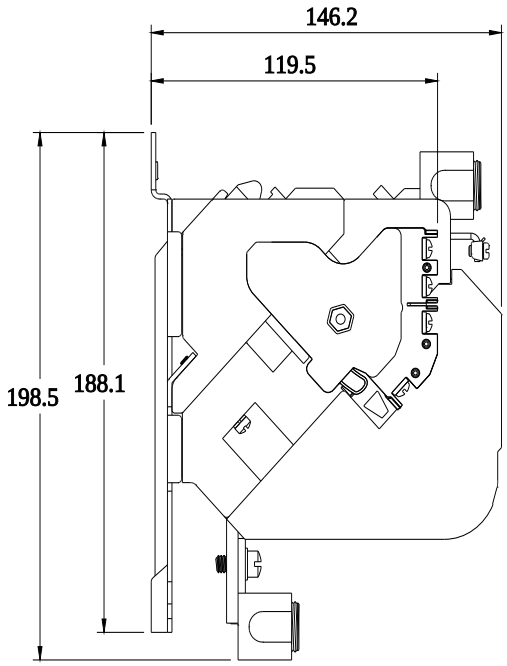

Subject to change without notice
© Copyright Siemens

WIRING DIAGRAM

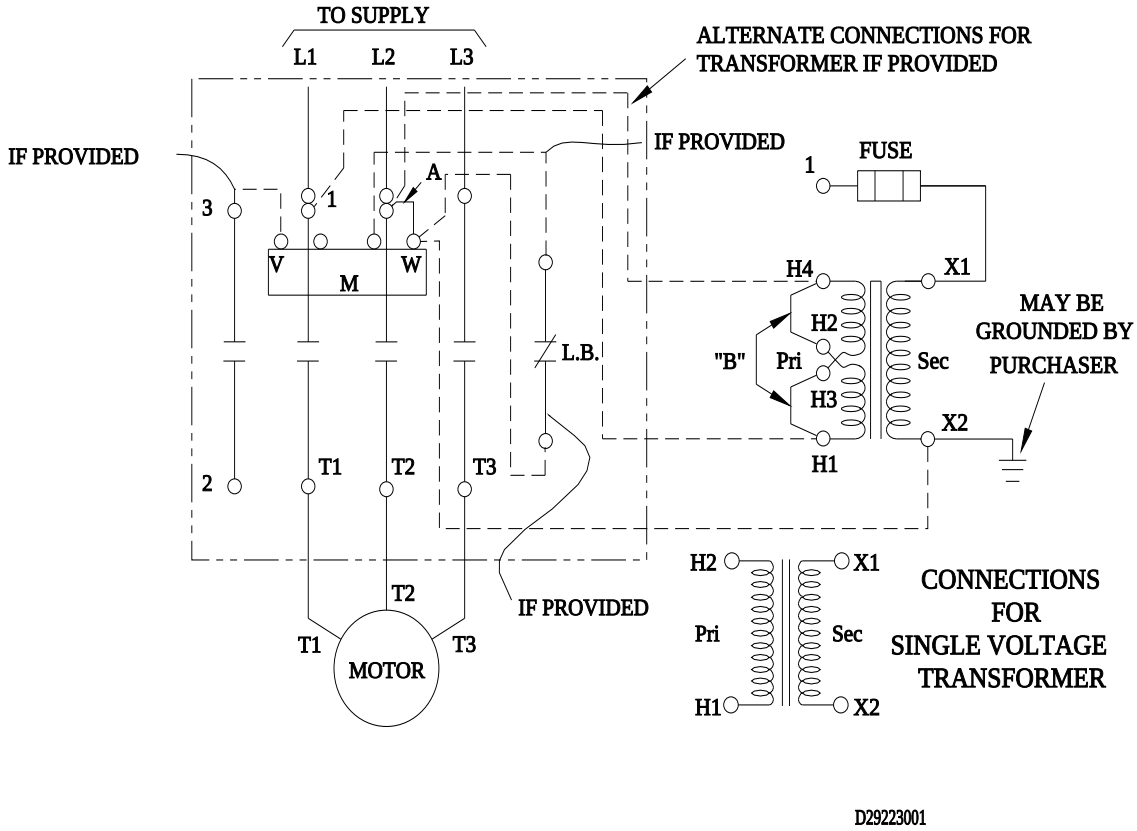

last modified: 11/28/2023

Subject to change without notice
© Copyright Siemens