SIEMENS

Data sheet US2:LEN01E003120C



Figure similar

Electrically held lighting contactor, Contactor amp rating 100A, 0 N.C. / 3 N.O. Poles, 110VAC 50HZ/120VAC 60HZ coil, 1 NO / 1 NC auxiliary contacts Non-combination type, (no disconnect device), Enclosure NEMA type 1, Indoor general purpose use

product brand name	Class LE
design of the product	Electrically held lighting contactor
special product feature	Compact design; Finger safe control terminals
General technical data	
weight [lb]	23 lb
Height x Width x Depth [in]	20 × 12 × 8 in
touch protection against electrical shock	NA for enclosed products
installation altitude [ft] at height above sea level maximum	6560 ft
ambient temperature [°F]	
● during storage	-67 ... +176 °F
● during operation	32 ... 104 °F
ambient temperature	
● during storage	-55 ... +80 °C
● during operation	0 ... 40 °C
country of origin	Germany
Contactor	
size of contactor	100 Amp
number of NO contacts for main contacts	3
number of NC contacts for main contacts	0
operating voltage for main current circuit at AC at 60 Hz maximum	600 V
mechanical service life (switching cycles) of the main contacts typical	10000000
contact rating of the main contacts of lighting contactor	
● at tungsten (1 pole per 1 phase) rated value	100A @277V 1p 1ph
● at tungsten (2 poles per 1 phase) rated value	100A @480V 2p 1ph
● at tungsten (3 poles per 3 phases) rated value	100A @480V 3p 3ph
● at ballast (1 pole per 1 phase) rated value	100A @347V 1p 1ph
● at ballast (2 poles per 1 phase) rated value	100A @600V 2p 1ph
● at ballast (3 poles per 3 phases) rated value	100A @600V 3p 3ph
● at resistive load (1 pole per 1 phase) rated value	100A @347V 1p 1ph
● at resistive load (2 poles per 1 phase) rated value	100A @600V 2p 1ph
● at resistive load (3 poles per 3 phases) rated value	100A @600V 3p 3ph
Auxiliary contact	
number of NC contacts at contactor for auxiliary contacts	1
number of NO contacts at contactor for auxiliary contacts	1
number of total auxiliary contacts maximum	14

Subject to change without notice
© Copyright Siemens

contact rating of auxiliary contacts of contactor according to UL	A600 / P600
Coil	
type of voltage of the control supply voltage	AC
control supply voltage	
● at DC rated value	0 ... 0 V
● at AC at 50 Hz rated value	110 ... 110 V
● at AC at 60 Hz rated value	120 ... 120 V
apparent pick-up power of magnet coil at AC	326 V·A
apparent holding power of magnet coil at AC	22 V·A
operating range factor control supply voltage rated value of magnet coil	0.85 ... 1.1
switch ON delay time	13 ... 50 ms
OFF delay time	10 ... 21 ms
Enclosure	
degree of protection NEMA rating of the enclosure	NEMA 1 enclosure
design of the housing	Indoor general purpose use
Mounting/wiring	
mounting position	Vertical
fastening method	Surface mounting and installation
type of electrical connection for supply voltage line-side	Screw-type terminals
tightening torque [lbf·in] for supply	26 ... 39 lbf·in
type of connectable conductor cross-sections at line-side at AWG cables single or multi-stranded	2x (10 ... 1/0 AWG), 1x (10 ... 2/0 AWG)
temperature of the conductor for supply maximum permissible	75 °C
material of the conductor for supply	CU
type of electrical connection for load-side outgoing feeder	Screw-type terminals
tightening torque [lbf·in] for load-side outgoing feeder	26 ... 39 lbf·in
type of connectable conductor cross-sections at AWG cables for load-side outgoing feeder single or multi-stranded	2x (10 ... 1/0 AWG), 1x (10 ... 2 AWG)
temperature of the conductor for load-side outgoing feeder maximum permissible	75 °C
material of the conductor for load-side outgoing feeder	CU
type of electrical connection of magnet coil	Screw-type terminals
tightening torque [lbf·in] at magnet coil	7 ... 10 lbf·in
type of connectable conductor cross-sections of magnet coil at AWG cables single or multi-stranded	2x (20 ... 16 AWG), 2x (18 ... 14 AWG)
temperature of the conductor at magnet coil maximum permissible	75 °C
material of the conductor at magnet coil	CU
type of electrical connection at contactor for auxiliary contacts	Screw-type terminals
tightening torque [lbf·in] at contactor for auxiliary contacts	7 ... 10 lbf·in
type of connectable conductor cross-sections at contactor at AWG cables for auxiliary contacts single or multi-stranded	2x (20 ... 16 AWG), 2x (18 ... 14 AWG)
temperature of the conductor at contactor for auxiliary contacts maximum permissible	75 °C
material of the conductor at contactor for auxiliary contacts	CU
Short-circuit current rating	
design of the fuse link for short-circuit protection of the main circuit required	100kA@600V (Class J 125A max)
design of the short-circuit trip	Thermal magnetic circuit breaker
breaking capacity maximum short-circuit current (Icu)	
● at 240 V	25 kA
● at 480 V	25 kA
● at 600 V	18 kA
certificate of suitability	NEMA ICS 2; UL 508
Further information	

Subject to change without notice
© Copyright Siemens

Industrial Controls - Product Overview (Catalogs, Brochures,…)
www.usa.siemens.com/iccatalog
Industry Mall (Online ordering system)
https://mall.industry.siemens.com/mall/en/us/Catalog/product?mlfb=US2:LEN01E003120C
Service&Support (Manuals, Certificates, Characteristics, FAQs,...)
https://support.industry.siemens.com/cs/US/en/ps/US2:LEN01E003120C
Image database (product images, 2D dimension drawings, 3D models, device circuit diagrams, EPLAN macros, ...)
http://www.automation.siemens.com/bilddb/cax_de.aspx?mlfb=US2:LEN01E003120C&lang=en
Certificates/approvals
https://support.industry.siemens.com/cs/US/en/ps/US2:LEN01E003120C/certificate

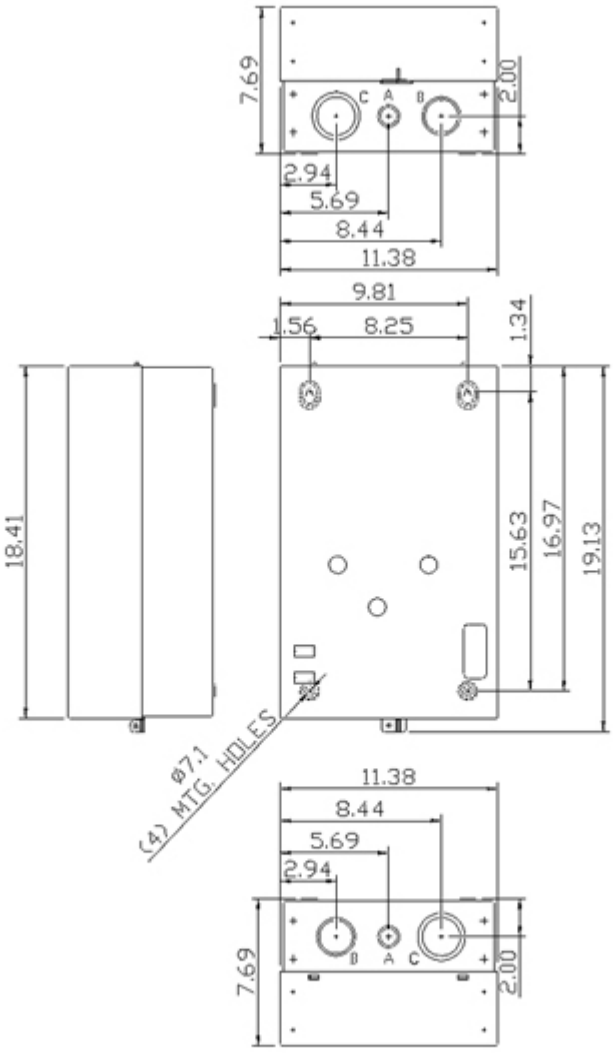

LETTER	KNOCKOUT & CONDUIT SIZE
A	ø22.2 X ø28.6 FOR 12.7 & 19 CONDUIT
B	ø43.6 X ø50 FOR 31.8 & 38.1 CONDUIT
C	ø50 X ø62.7 FOR 38.1 & 50.8 CONDUIT

© Copyright Siemens

20 - 100 AMP (* Optional 4th Pole Only For 20 & 30 AMP)

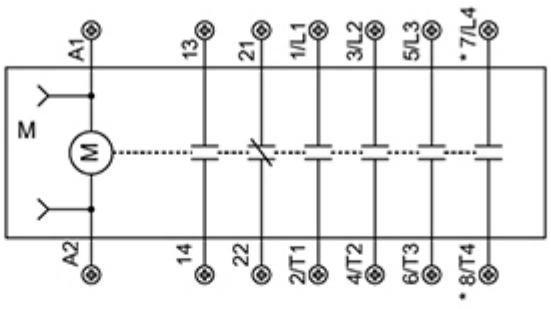

30 & 60 AMP MULTI-POLE

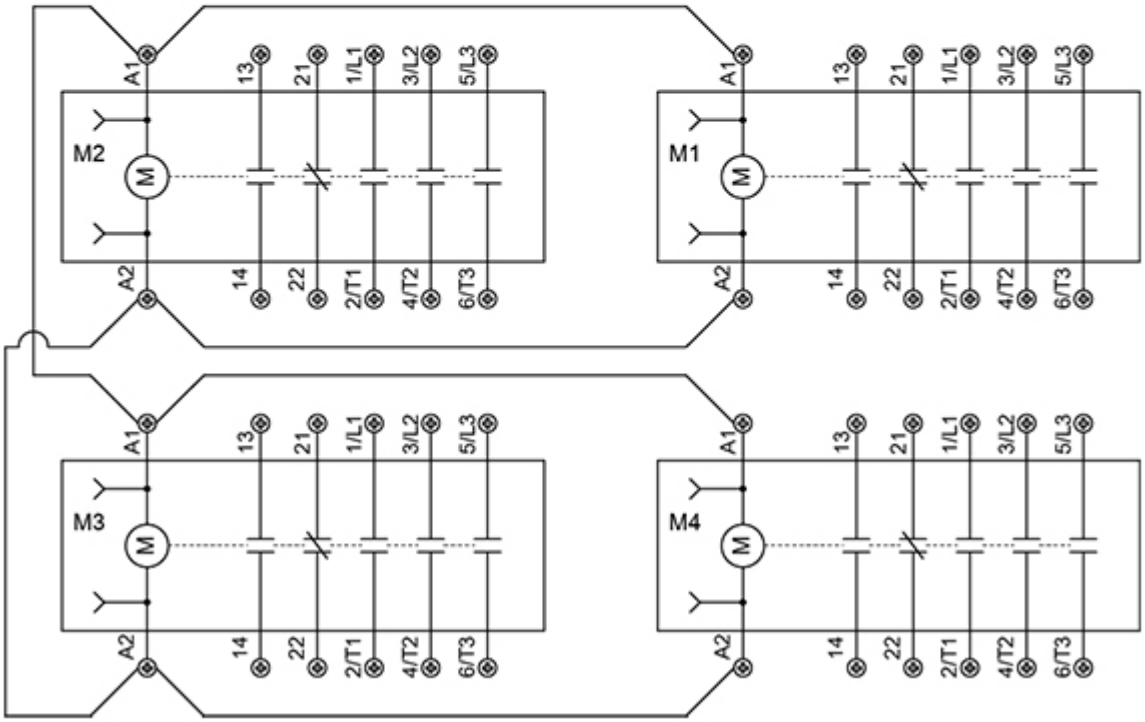

last modified: 3/6/2020

Subject to change without notice
© Copyright Siemens