SIEMENS

Data Sheet

VBII Heavy Duty Solar Photovoltaic Switches

60A – 600V DC, Type 1

usa.siemens.com/switches



Standards and Ratings

- UL Listed and specifically designedand tested for use with three separate 600V DC circuits
- Specific catalog numbers are available for use with negative and for positive ground system
- Switches comply with UL98 requirements and are UL listed in file number E335018 as UL1741Photovoltaic Disconnect switches
- Door labeling as required by Article 690 of the NEC supplied as standard
- Rated 10,000 AIC when protected by Class K, J or R fuses rated at 600V DC
- UL approved for field installation of optional copper body and crimp type terminals
- Includes internal shields which meet NEC 2020 230.62 line side barrier requirements

Features

- Innovative magnetic arc suppression incorporated into the line base
- Quick-make and break switching action
- Double break visible blade design
- Highly visible ON/OFF indication
- Rugged installer friendly enclosure design
- Front removable line and load lugs which can easily be converted to copper body or compression type lugs
- Defeatable dual cover interlock
- Ground bar factory installed as standard
- Two and 3 point mounting provisions are standard
- Large wire gutters and oversized lugs allow for larger cables to minimize voltage drop on long cable runs

Product Specifications

Type VBII, 60 Amp, Type 1 (Indoor)

General Information

Catalog Number	Volts DC	Description	Shipping Weight (lbs.)	Rated Isc per NEC Article 690
Negative Ground				
HF362PV	600	3 Pole, 3 Wire, Fusible	18	38.4A
HNF362PV	600	3 Pole, 3 Wire, Non-Fusible	18	48.0A
Positive Ground				
HF362PVPG	600	3 Pole, 3 Wire, Fusible	17	38.4A
HNF362PVPG	600	3 Pole, 3 Wire, Non-Fusible	17	48.0A

Accessories

Catalog Number	Description
HA161234	One Normally Open and Closed Auxiliary Switches
HA261234	Two Normally Open and Closed Auxiliary Switches
HA361234	Low Voltage Auxiliary Switch
HG261234	Isolated Equipment Ground Lug Kit
HP62	Fuse Puller (3 per kit)
HN623	Neutral Kit
HR62	600 Volt Class R Fuse Clip Kit (3 fuse clips per kit)
HLC612	Copper Lug Kit (9 lugs per kit)
HLC613	Compression Lug Neutral Barrier Kit

Mechanical Lug Wire Range (60/75°C, Cu/Al)

Description	Wire Range
Line, Load, Neutral	#12-2 AWG (Al) or #14-2 AWG (Cu)
Ground	#14-4 AWG

Replacement Parts

Catalog Number	Description
HBB62	Fusible 600 Volt Load Side Replacement Base
HH6123 [1]	Legacy (larger sized) Handle/Handle Guard
HH6123A	Replacement Handle/Handle Guard
HL612	Replacement Lugs (3 lugs per kit)
HM6123	Replacement Mechanism

Compression Lugs

Wire Size	Burndy		Thomas-Betts		Ilsco	
	CU Only	CU/AL	CU Only	CU/AL	CU Only	CU/AL
#14-10	—	—	256-30695-1352	60097	—	—
#8	YA8C-L BOX YA8C-TC14	YA8CA3	54130 54930BE	60102 61102	—	ACL-8
#6	YA6C-L BOX YA6C	YA6CA1	54105 54905BE	60107 61107	CRB-6 CRB-6L	ACL-6
#4	—	—	54106	61112	CRB-4	—

1 Legacy style handle phased out in 2021.
FAQ:"How can I tell?" Inspect the red handle grip. If the red handle grip is attached with screw, order the legacy kit.
The new style grip is pressed onto the metal

Wiring Diagrams

For negative ground PV systems
HF362PV

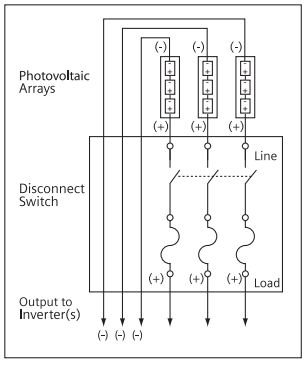

HNF362PV

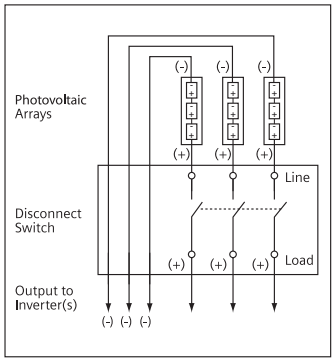

For positive ground PV systems
HF362PVPG

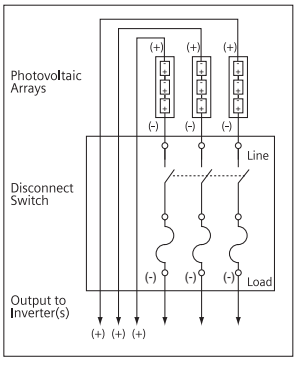

HNF362PVPG

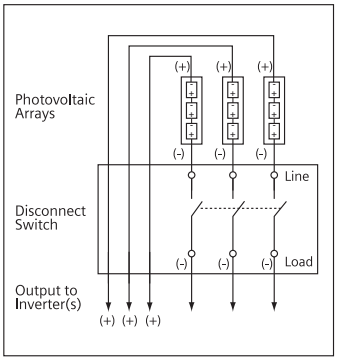

Dimension Drawings

Type VBII, 60 Amp, Type 1

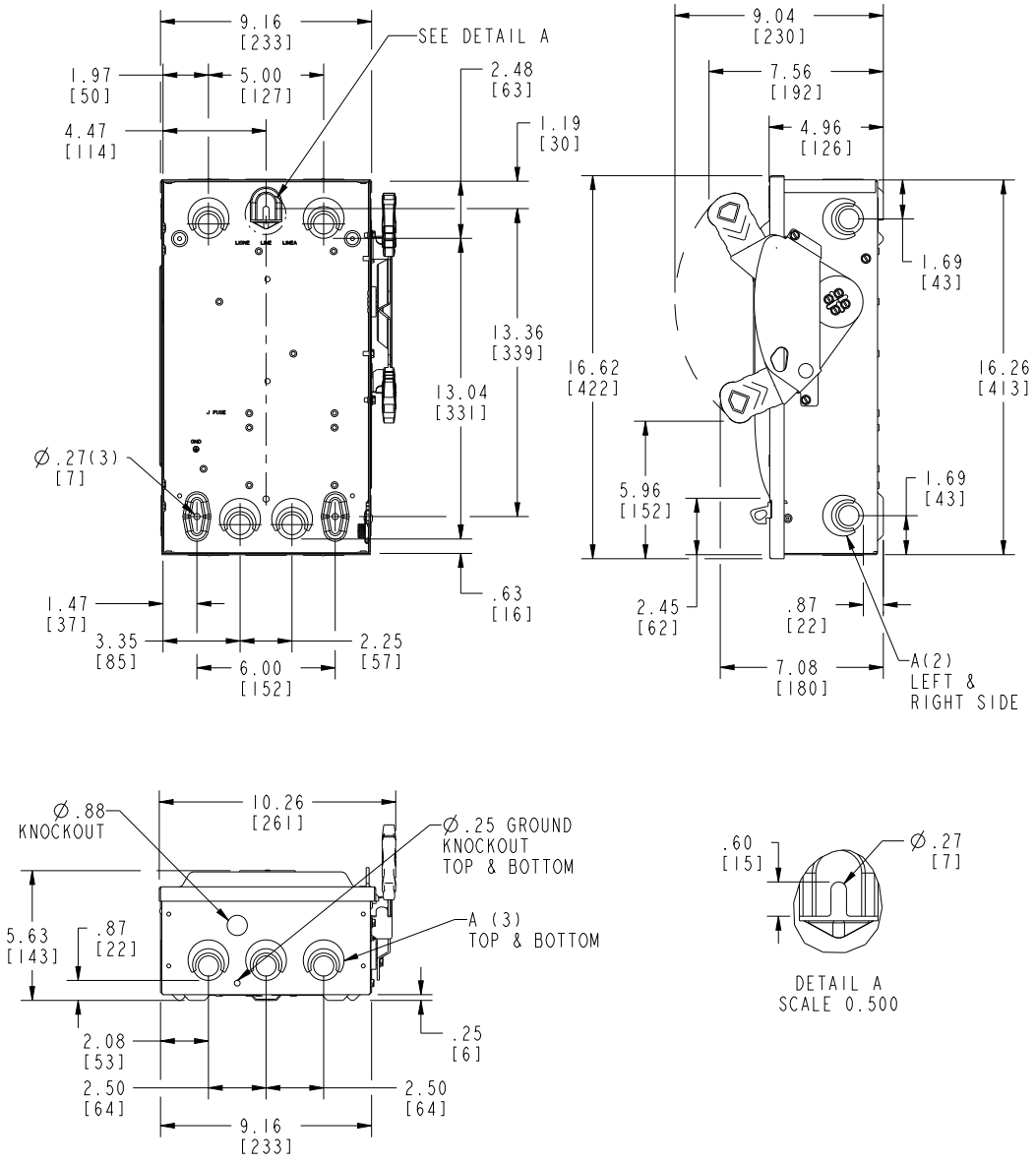

Dimensions shown in inches and millimeters ( ).
Dimension shown accurate to + ⅛ inch.

KNOCKOUT CODE	CONDUIT CODE
A ((Tangential)	.50 .75 1.00 1.25

	LINE SIDE WIRE BEND	LOAD SIDE WIRE BEND
Non-Fused	3.54 (90)	8.68 (220)

Enclosure: Cold Rolled Steel
.054 Thick (17 Gauge)
Finish: ANSI Grey #61 Paint)

Published by
Siemens Industry, Inc. 2021.

Siemens Industry, Inc.
3617 Parkway Ln
Peachtree Corners, GA 30092

For more information, please contact
our Customer Support Center.
Phone: 1-800-241-4453
E-mail: info.us@siemens.com

usa.siemens.com/switches

Order No.: SSDS-HF6NP-1021
Printed in U.S.A.
© 2021 Siemens Industry, Inc.

The technical data presented in this document is based on an actual case or on as-designed parameters, and therefore should not be relied upon for any specific application and does not constitute a performance guarantee for any projects. Actual results are dependent on variable conditions. Accordingly, Siemens does not make representations, warranties, or assurances as to the accuracy, currency or completeness of the content contained herein. If requested, we will provide specific technical data or specifications with respect to any customer's particular applications. Our company is constantly involved in engineering and development. For that reason, we reserve the right to modify, at any time, the technology and product specifications contained herein.