SIEMENS

Product data sheet 8US1111-4SM00



Similar to image

BUSBAR ADAPTER SYSTEM BUSBAR ADAPTER,
WIDTH 70MM F. CIRCUIT-BREAKER 40/60MM SYSTEM,
FOR SINGLE UNITS OF MOTOR FEEDERS 3RV1,
3RT1,
3RA1 LENGTH 182MM NOTE: ONLY SUITABLE
400V/50KA OR UP TO 460V/25KA

Further information:

Information- and Downloadcenter (Catalogs, Brochures,…)
http://www.siemens.com/lowvoltage/catalogs

Global Industry Mall (Online ordering system)
http://www.siemens.com/lowvoltage/mall

Service&Support (Manuals, Certificates, Characteristics, FAQs,...)
http://support.automation.siemens.com/WW/view/en/8US1111-4SM00/all

Image database (product images, 2D dimension drawings, 3D models, device circuit diagrams, ...)
http://www.automation.siemens.com/bilddb/cax_en.aspx?mlfb=8US1111-4SM00

subject to modifications
© Copyright Siemens AG 2013

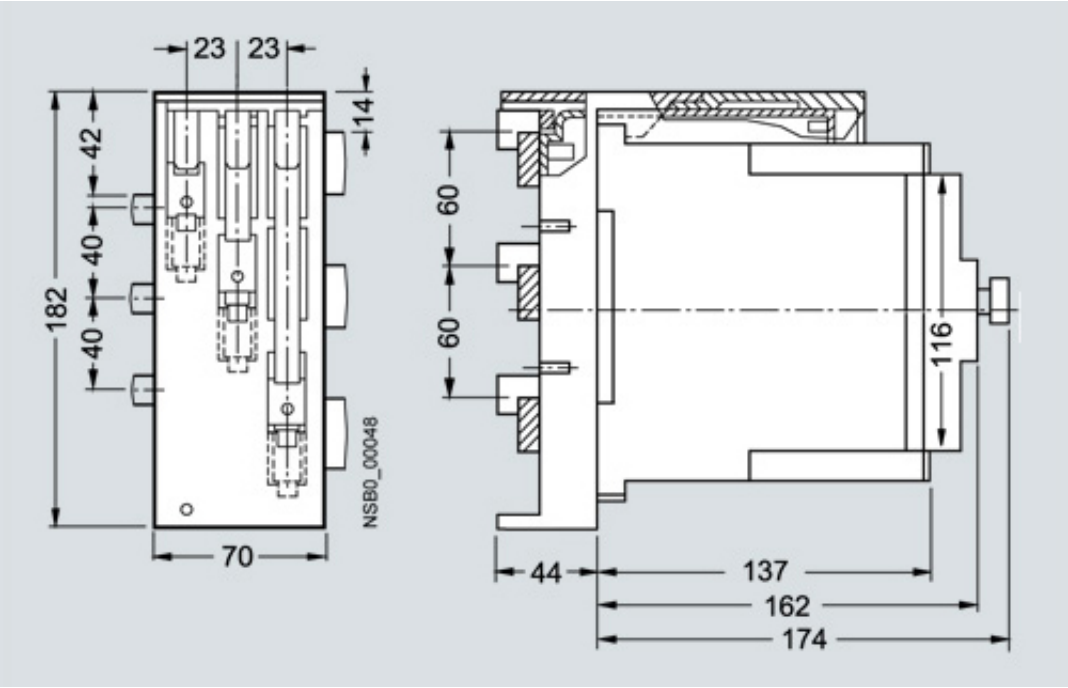

last change: Mar 4, 2013

© Copyright Siemens AG 2013