SIEMENS

Product data sheet 8US1211-4SL01

BUSBAR ADAPTER 60 MM BUSBAR SYSTEM FOR CIRCUIT-BREAKERS 3VL1/2 UP TO 160A WITH TERMINAL COVER WIDTH: 108 MM, LENGTH: 175 MM

Further information:

Information- and Downloadcenter (Catalogs, Brochures,…)
http://www.siemens.com/lowvoltage/catalogs

Global Industry Mall (Online ordering system)
http://www.siemens.com/lowvoltage/mall

Service&Support (Manuals, Certificates, Characteristics, FAQs,...)
http://support.automation.siemens.com/WW/view/en/8US1211-4SL01/all

Image database (product images, 2D dimension drawings, 3D models, device circuit diagrams, ...)
http://www.automation.siemens.com/bilddb/cax_en.aspx?mlfb=8US1211-4SL01

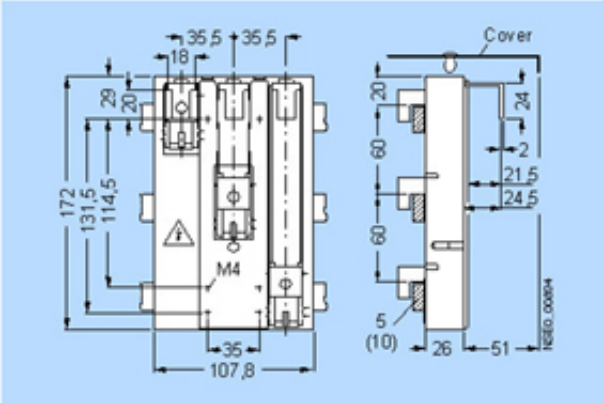

last change: Mar 4, 2013

© Copyright Siemens AG 2013