SIEMENS

SIMATIC

ET 200SP HA
Input/output module AI-DI 16/ DQ16x24VDC HART HA (6DL1133-6EW00-0PH1)

Manual

Security information 1

Product overview 2

Wiring 3

Parameters 4

Displays and interrupts 5

HART function 6

Technical specifications 7

Drivers, parameters, diagnostics messages and address space A

HART operating data records B

Analog value display C

11/2017
A5E39294170-AB

Legal information

Warning notice system

This manual contains notices you have to observe in order to ensure your personal safety, as well as to prevent damage to property. The notices referring to your personal safety are highlighted in the manual by a safety alert symbol, notices referring only to property damage have no safety alert symbol. These notices shown below are graded according to the degree of danger.

⚠ DANGER

indicates that death or severe personal injury **will** result if proper precautions are not taken.

⚠ WARNING

indicates that death or severe personal injury **may** result if proper precautions are not taken.

⚠ CAUTION

indicates that minor personal injury can result if proper precautions are not taken.

NOTICE

indicates that property damage can result if proper precautions are not taken.

If more than one degree of danger is present, the warning notice representing the highest degree of danger will be used. A notice warning of injury to persons with a safety alert symbol may also include a warning relating to property damage.

Qualified Personnel

The product/system described in this documentation may be operated only by **personnel qualified** for the specific task in accordance with the relevant documentation, in particular its warning notices and safety instructions. Qualified personnel are those who, based on their training and experience, are capable of identifying risks and avoiding potential hazards when working with these products/systems.

Proper use of Siemens products

Note the following:

⚠ WARNING

Siemens products may only be used for the applications described in the catalog and in the relevant technical documentation. If products and components from other manufacturers are used, these must be recommended or approved by Siemens. Proper transport, storage, installation, assembly, commissioning, operation and maintenance are required to ensure that the products operate safely and without any problems. The permissible ambient conditions must be complied with. The information in the relevant documentation must be observed.

Trademarks

All names identified by ® are registered trademarks of Siemens AG. The remaining trademarks in this publication may be trademarks whose use by third parties for their own purposes could violate the rights of the owner.

Disclaimer of Liability

We have reviewed the contents of this publication to ensure consistency with the hardware and software described. Since variance cannot be precluded entirely, we cannot guarantee full consistency. However, the information in this publication is reviewed regularly and any necessary corrections are included in subsequent editions.

Siemens AG
Division Process Industries and Drives
Postfach 48 48
90026 NÜRNBERG
GERMANY

A5E39294170-AB
℗ 01/2018 Subject to change

Copyright © Siemens AG 2017.
All rights reserved

Table of contents

1 Security information....5
2 Product overview....7
2.1 Properties of the I/O module AI-DI 16/DQ16x24VDC HART HA....7
3 Wiring....11
3.1 Pin assignment of the I/O module AI-DI 16/DQ16x24VDC HART HA....11
3.2 Schematic circuit diagram....15
4 Parameters....17
4.1 Configurations of the I/O module AI-DI 16/DQ16x24VDC HART HA....17
4.2 Module/channel parameters....18
4.3 Explanation of the module/channel parameters....23
4.4 Explanation of the digital output parameters....24
4.5 Explanation of the digital input parameters....25
4.6 Explanation of the analog input parameters....27
4.7 HART mapping parameters....30
5 Displays and interrupts....31
5.1 Status and error displays of the I/O module AI-DI 16/DQ16x24VDC HART HA....31
5.2 Interrupts....33
6 HART function....35
6.1 How HART works....36
6.2 HART applications....40
6.3 HART variables....42
7 Technical specifications....45
A Drivers, parameters, diagnostics messages and address space....53
A.1 Concept of the driver and diagnostics blocks....53
A.2 Parameter assignment....55
A.3 Parameter assignment and structure of the module and channel parameters....57
A.4 Parameter assignment and structure of HART mapping parameters DS 130....64
A.5 Diagnostics messages and maintenance events....66
A.6 Hardware interrupts....71
A.7 Address space in digital mode....73
A.8 Address space in digital mode with time stamp (accuracy 1 ms)....74

A.9 Address space in mixed mode 75
B HART operating data records....81
B.1 HART command interface....81
B.2 HART job and response data records....83
B.3 HART directory....89
B.4 HART feature data....90
B.5 HART variable data record....91
B.6 HART-specific settings....92
C Analog value display....95
C.1 Representation of analog values in the current measuring ranges....95
Index....97

Security information

1

Siemens provides products and solutions with industrial security functions that support the secure operation of plants, systems, machines, and networks.

In order to protect plants, systems, machines and networks against cyber threats, it is necessary to implement – and continuously maintain – a holistic, state-of-the-art industrial security concept. Siemens' products and solutions constitute one element of such a concept.

Customers are responsible for preventing unauthorized access to their plants, systems, machines and networks. Such systems, machines and components should only be connected to an enterprise network or the internet if and to the extent such a connection is necessary and only when appropriate security measures (e.g. firewalls and/or network segmentation) are in place.

For additional information on industrial security measures that may be implemented, please visit:
https://www.siemens.com/industrialsecurity

Siemens' products and solutions undergo continuous development to make them more secure. Siemens strongly recommends that product updates are applied as soon as they are available and that the latest product versions are used. Use of product versions that are no longer supported, and failure to apply the latest updates may increase customer's exposure to cyber threats.

To stay informed about product updates, subscribe to the Siemens Industrial Security RSS Feed under
https://www.siemens.com/industrialsecurity.

Validity of the documentation

This device manual describes the I/O module AI-DI 16/DQ16x24VDC HART HA, article number 6DL1133-6EW00-0PH1.

It supplements the system manual for the ET 200SP HA distributed I/O system.

Functions that generally relate to the system are described in this manual.

The information provided in this device manual and in the system/function manuals will allow you to commission the ET 200SP HA.

Appendices

The appendices provide information that is relevant for using the ET 200SP HA outside the PCS 7 environment.

Conventions

Please also observe notes marked as follows:

Note

A note contains important information on the product described in the documentation, on the handling of the product and on the section of the documentation to which particular attention should be paid.

Product overview

2

2.1 Properties of the I/O module AI-DI 16/DQ16x24VDC HART HA

View of the module

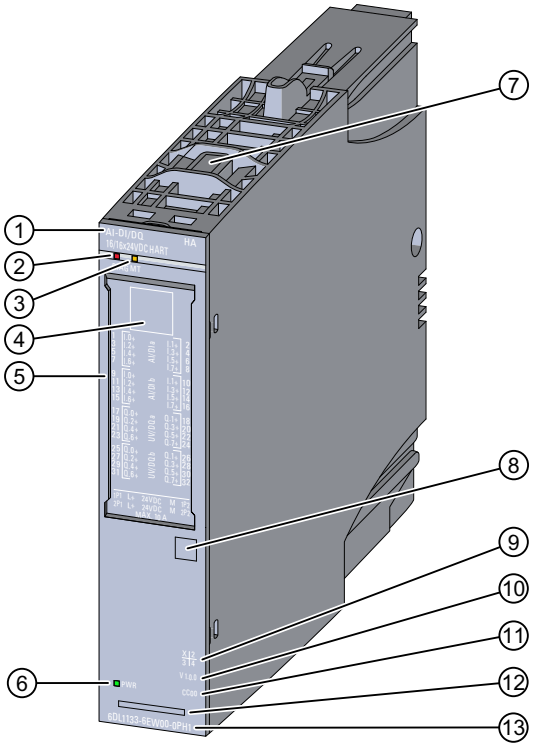

① Module type and designation
② LED for diagnostics
③ LED for maintenance
④ 2D matrix code
⑤ Wiring diagram
⑥ LED for supply voltage
⑦ Output disable switch
⑧ Module type color coding
⑨ Product version
⑩ Function status and firmware version
⑪ Color code for selection of the color-coded labels
⑫ Serial number
⑬ Article number

Figure 2-1 View of AI-DI 16/DQ16x24VDC HART HA

Possible configurations

The I/O module has 16 channels. Each of the 16 channels consists of one digital output and one digital/analog input.

The functions of the I/O module and its system integration differ depending on the configuration. You can use the following versions of the I/O module:

- Version 1: DI 16/DQ16x24VDC HA in digital-only mode
- Version 2: AI-DI 16/DQ 16x24VDC HART HA as a digital/analog module in mixed mode.

The version is set in the configuration. See section Parameters (Page 17).

The time stamp (SoE: Sequence of Events) is available when mixed mode is configured for the I/O module.

The time stamp (SoE: Sequence of Events) is available with a precision of 1 ms when digital-only mode is configured for the I/O module.

In mixed mode, you can set the 16 inputs of the I/O module as digital inputs or analog inputs for each channel with or without HART via the configuration. You can change the parameters in CPU RUN and switch inputs from digital to analog in mixed mode, for example.

HART is only available in mixed mode and with parameter assignment in a measuring range of 4 to 20 mA.

Properties

The I/O module has the following technical properties:

- 16 inputs, can be configured as digital or analog.
- Digital inputs with the following properties that can be configured by channel:
  - Pulse stretching
  - Time stamp in mixed mode
  - High-precision time stamping with a precision of 1 ms in digital-only mode
  - Hardware interrupts for positive and negative edges
  - Input delay
- Analog inputs with the following properties that can be configured by channel:
  - Current measurement type for 2-wire transducer
  - Measuring ranges 0 to 20 mA, 0 to 10 mA, 4 to 20 mA or 4 to 20 mA with HART
  - Resolution depends on measuring range and interference frequency suppression; minimum 15 bits, maximum 16 bits including sign.
  - Hardware interrupts for monitoring configurable limits
  - Smoothing
  - Interference frequency suppression 10 Hz, 50 Hz or 60 Hz
  - Configurable wire break limit
- 16 outputs, can be configured as digital outputs or as sensor supply for analog current measurement
  - Substitute value reaction for digital outputs can be configured by channel
- Channel-specific configurable diagnostics
- Module-specific configurable diagnostics for missing supply voltage L+

The I/O module supports the following functions:

- Firmware update
- I&M identification data
- Parameter reassignment in RUN
- Value status QI
- IO redundancy
- HART communication (rev. 5 to rev. 7) in mixed mode
- Up to 8 HART variables in the input area
- Up to 4 multiHART ranges in the input/output area
- Output disable switch

You can configure the I/O module with HW Config and integrate it into your system.

Output disable switch

WARNING

Personal injury and damage to property may occur

Note the following information for use in hazardous areas:

- Personal injury and property damage can be incurred if the ET 200SP HA connectors are pulled out during operation or if the output disable switch is pressed.
- In hazardous areas, always ensure that power to the ET 200SP HA is turned off before removing the plug connections or pressing the output disable switch.

If you want to pull the I/O module in runtime, you have to press the output disable switch for 3 seconds for the I/O module to be de-energized. After the output disable switch has been pressed for 3 seconds, the LED DIAG flashes red, the LED MT lights up yellow and the I/O module generates a diagnostics message. See section Status and error displays of the I/O module AI-DI 16/DQ16x24VDC HART HA (Page 31).

Note

Pressing the output disable switch interrupts any ongoing firmware update. A firmware update cannot be performed when the device is deenergized.

Accessories

The following accessories must be ordered separately:

- Labeling strips
- Color-coded labels
- Reference identification label
- Shield connector

Wiring

3

3.1 Pin assignment of the I/O module AI-DI 16/DQ16x24VDC HART HA

Terminal blocks

You can operate the I/O module with the following terminal blocks:

- 6DL1193-6TP00-0DH1, light
- 6DL1193-6TP00-0BH1, dark
- 6DL1193-6TP00-0DM1, light, for redundant configuration
- 6DL1193-6TP00-0BM1, dark, for redundant configuration

The terminal block is not included in the scope of delivery for the module and has to be ordered separately

Note

You can find additional information on the configuration in the system manual.

General pin assignment

Table 3-1 Pin assignment of the AI-DI 16/DQ16x24VDC HART HA

Terminal	assignment	Terminal	assignment	Explanations
1	AI_0+ / DI_0	**2**	AI_1+ / DI_1	Terminal 1 to 16:
3	AI_2+ / DI_2	**4**	AI_3+ / DI_3	AI_n+: Analog input signal "+", channel n
5	AI_4+ / DI_4	**6**	AI_5+ / DI_5	DI_n: digital input signal, channel n
7	AI_6+ / DI_6	**8**	AI_7+ / DI_7	Terminal 17 to 32:
9	AI_8+ / DI_8	**10**	AI_9+ / DI_9	U_{Vn}: Sensor supply, output, channel n
11	AI_{10}+ / DI_{10}	**12**	AI_{11}+ / DI_{11}	DQ_n : Digital output, channel n
13	AI_{12}+ / DI_{12}	**14**	AI_{13}+ / DI_{13}	
15	AI_{14}+ / DI_{14}	**16**	AI_{15}+ / DI_{15}	1P1: Supply voltage L+ of the voltage bus 1P
17	U_{V0} / DQ_0	**18**	U_{V1} / DQ_1	2P1: Supply voltage L+ of the voltage bus 2P
19	U_{V2} / DQ_2	**20**	U_{V3} / DQ_3	1P2: Ground reference of the voltage bus 1P
21	U_{V4} / DQ_4	**22**	U_{V5} / DQ_5	2P2: Ground reference of the voltage bus 2P
23	U_{V6} / DQ_6	**24**	U_{V7} / DQ_7	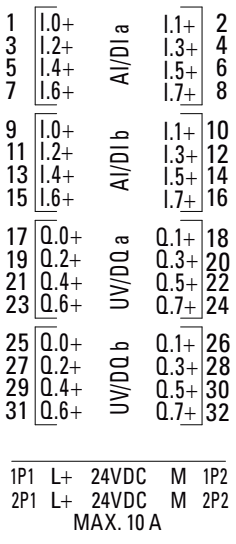
25	U_{V8} / DQ_8	**26**	U_{V9} / DQ_9	
27	U_{V10} / DQ_{10}	**28**	U_{V11} / DQ_{11}	
29	U_{V12} / DQ_{12}	**30**	U_{V13} / DQ_{13}	
31	U_{V14} / DQ_{14}	**32**	U_{V15} / DQ_{15}	
1P1	L+	**1P2**	M	
2P1[1]	L+	**2P2**	M	
Recommended color-coded label: CC00, 6DL1193-6CP00-2HH1				

[1] If the module is inserted in a TB45R-P32 terminal block suitable for IO redundancy, the voltage at this terminal is 1P3.

The figure below shows the wiring of a digital input, using the example of channel 0:

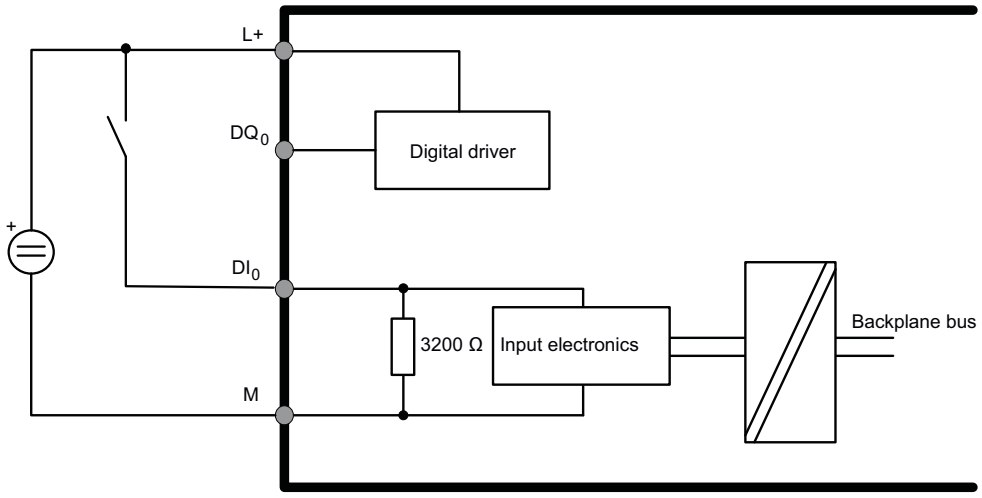

You can also connect a digital sensor with sensor supply over the corresponding output terminal DQ_0; see 3.3.1 (Operating mode of the digital output). In this case, sensor supply monitoring is available for digital input DI_0.

The figure below shows the 2-conductor terminal of a measuring transducer, using the example of channel 0:

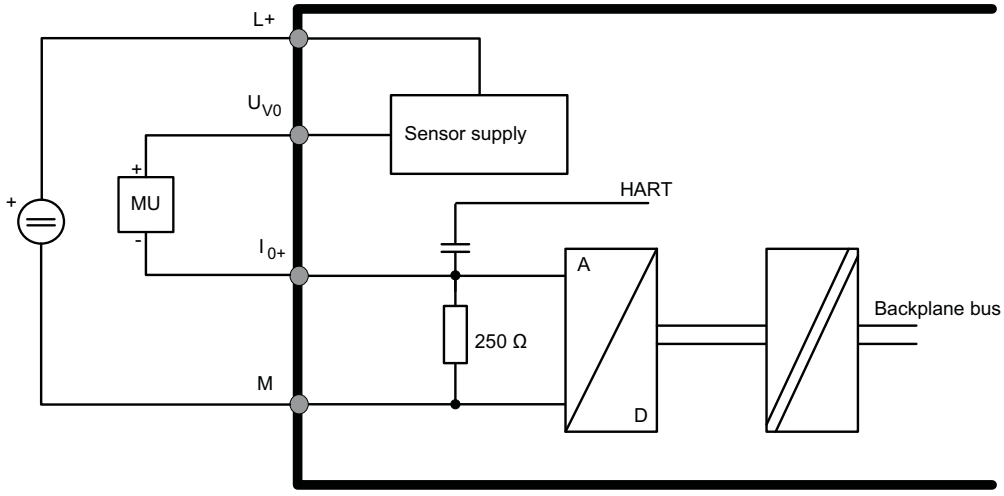

The figure below shows the non-isolated terminal of a 4-wire transducer, using the example of channel 0:

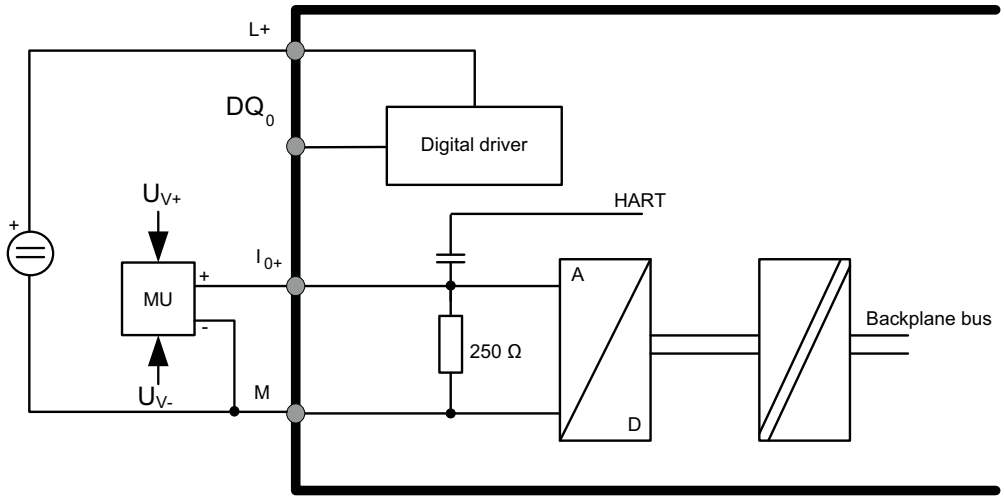

You can also power the 4-wire transducer over the corresponding output terminal DQ_0; see 3.3.1 (Operating mode of the digital output). The reference potential for the supply is M. In this case, sensor supply monitoring is available for analog input I_0.

3.2 Schematic circuit diagram

Below is a schematic circuit diagram of the AI-DI 16/DQ16x24VDC HART HA.

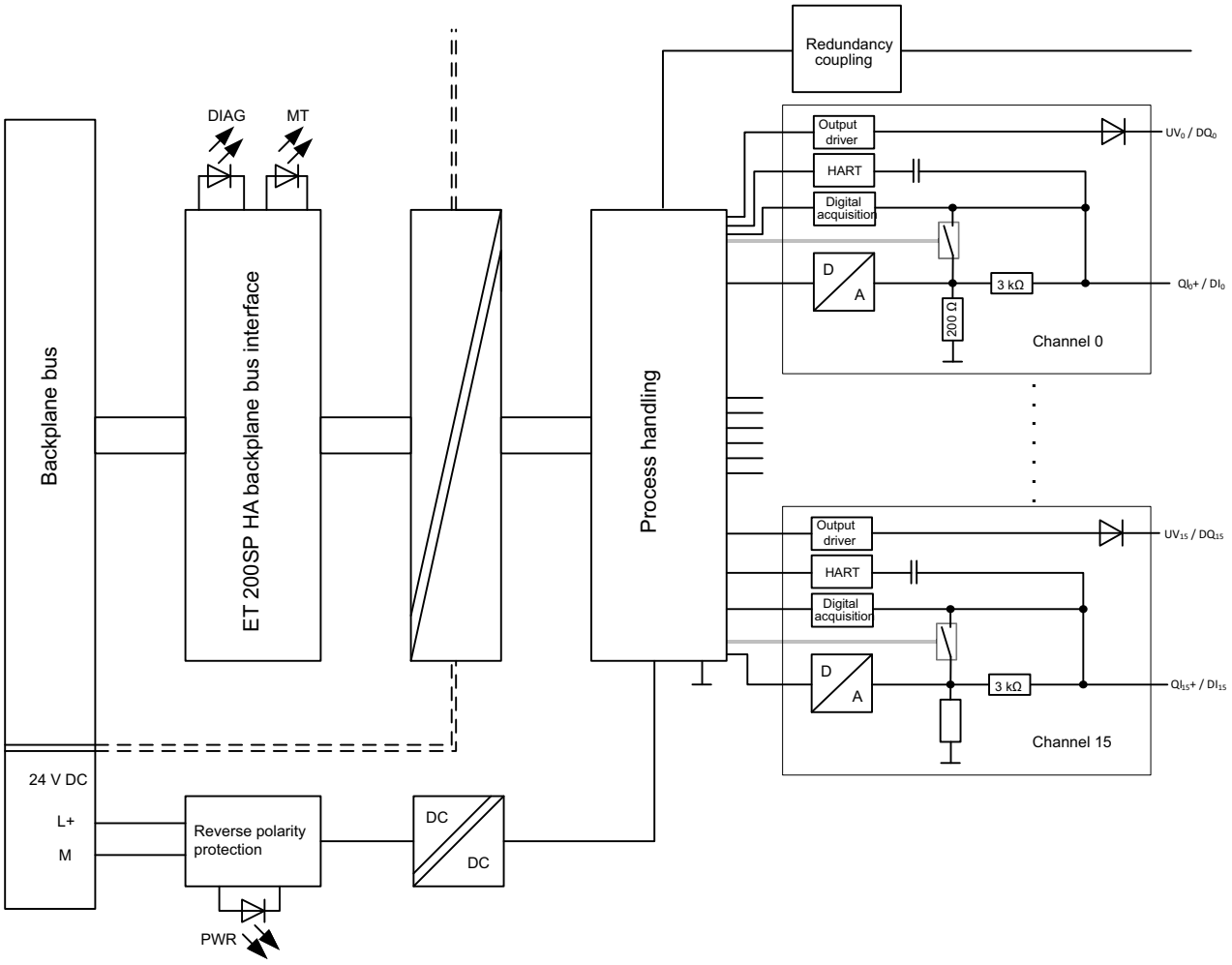

Figure 3-1 AI-DI 16/DQ16x24VDC HART HA circuit diagram

Supply voltage L+/M

Connect supply voltage L+ to terminals L+ and M. An internal protective circuit protects the I/O module from reverse polarity. The I/O module monitors whether the supply voltage L+ is connected and available.

Firmware update

The supply voltage L+ must be available on the I/O module at the start of firmware updates and during the update.

Digital outputs/sensor supply DQ/U_V

Depending on the parameter assignment, either the digital outputs or the sensor supplies of the module are implemented by channel over the DQ_n/U_{Vn} terminals.

When the I/O module is configured in mixed mode, the outputs can be used as the sensor supply.

Digital/analog inputs DI/AI

When the I/O module is configured in mixed mode, the inputs can be configured to be used by channel as digital or as analog inputs.

Parameters 4

4.1 Configurations of the I/O module AI-DI 16/DQ16x24VDC HART HA

Configuring

You configure the I/O module with PCS 7 V9.0 or higher.

Configuration options

The following configurations with value status are possible:

- Digital-only mode, if needed, with time stamp (accuracy 1 ms)
- Mixed mode
- Mixed mode with 8 HART variables in the input area
- Mixed mode with 1 multiHART range in the input/output area
- Mixed mode with 4 multiHART ranges in the input/output area

You will need to select either the I/O module for digital-only mode, DI 16/DQ 16x24VDC HA, or the I/O module for mixed mode, AI-DI 16/DQ16x24VDC HART HA, from the module catalog in line with the selected operating mode of the I/O module. The I/O module to be configured for digital-only mode can be found in the module catalog under I/O group "AI".

The time stamp is configured in the parameter dialog of the I/O module. If you select time stamping in digital-only mode, the module is configured with time stamping with a precision of 1 ms.

In mixed mode, the HART variables of the I/O module are configured indirectly using the parameter dialog of the I/O module.

Note

Direct reconfiguration of the I/O module in CPU RUN is only possible to one of the listed configurations. To set another configuration, first remove the I/O module in CPU RUN. Then add the I/O module with the new configuration in CPU RUN. Please note that this might change the I/O address area.

You define the functioning of the I/O module via parameters.

The parameters are subdivided into:

- Channel/ technology parameters (data record 128)
- Parameters that determine the display of HART variables in the address space of the module; HART mapping parameters (data record 130)
- System parameters (potential group, IO redundancy)

4.2 Module/channel parameters

Parameters in digital-only mode

The following settings are available when the I/O module is configured in digital-only mode:

Parameters	Value range	Default	Parameter reassign-ment in RUN	Efficiency range
Diagnostics, Missing supply voltage L+	• Enabled • Disabled	Enabled	Yes	Module
IO redundancy	• None • 2 modules	None	Yes	Module
Potential group	• Use potential group of the left module • Allow new potential group	Use potential group of the left module	No	Module
Parameters of the digital outputs				
Channel mode DO	• Enabled • Disabled • Sensor supply	Enabled	Yes	Channel
Diagnostics, Short-circuit to ground	• Enabled • Disabled	Enabled	Yes	Channel
Diagnostics, Wire break [1]	• Enabled • Disabled	Enabled	Yes	Channel
Wire break test	• Enabled • Disabled	Enabled	Yes	Channel
Reaction to CPU STOP	• Switch off • Keep last value • Output substitute value	Switch off	Yes	Channel
Substitute value	• 0 • 1	0	Yes	Channel
Parameters of the digital inputs				
Channel mode DI	• Enabled • Disabled	Enabled	Yes	Channel
Input delay	• None • 0.05 ms • 0.1 ms • 0.4 ms • 0.8 ms • 1.6 ms • 3.2 ms • 12.8 ms • 20 ms	3.2 ms When time stamp enabled, none	Yes	Channel

Parameters	Value range	Default	Parameter reassignment in RUN	Efficiency range
Diagnostics encoder supply	• Enabled • Disabled	Disabled	Yes	Channel
Hardware interrupt, rising edge	• Enabled • Disabled	Disabled	Yes	Channel
Hardware interrupt, falling edge	• Enabled • Disabled	Disabled	Yes	Channel
Pulse stretching	• None • 0.05 s • 0.1 s • 0.2 s • 0.5 s • 1 s • 2 s	None	Yes	Channel

[1] The wire break diagnostics can only be enabled when the "Check for wire break" parameter is enabled.

Parameters in mixed mode

The following settings are available when the I/O module is configured in mixed mode:

Parameter	Value range	Default	Parameter reassignment in RUN	Efficiency range
Diagnostics, Missing supply voltage L+	• Enabled • Disabled	Enabled	Yes	Module
IO redundancy	• None • 2 modules	None	Yes	Module
Potential group	• Use potential group of the left module • Allow new potential group	Use potential group of the left module	No	Module
Parameters of the digital outputs				
Channel mode DO	• Enabled • Disabled • Sensor supply	Sensor supply	Yes	Channel
Diagnostics Short-circuit to ground	• Enabled • Disabled	Enabled	Yes	Channel
Diagnostics Wire break [1]	• Enabled • Disabled	Enabled	Yes	Channel
Wire break test	• Enabled • Disabled	Enabled	Yes	Channel

Parameter	Value range	Default	Parameter reassignment in RUN	Efficiency range
Reaction to CPU STOP	• Switch off • Keep last value • Output substitute value	Switch off	Yes	Channel
Substitute value	• 0 • 1	0	Yes	Channel
Parameters of the digital inputs				
Channel mode DI	• Enabled • Disabled	Disabled	Yes	Channel
Input delay [2]	• None • 0.05 ms • 0.1 ms • 0.4 ms • 0.8 ms • 1.6 ms • 3.2 ms • 12.8 ms • 20 ms	3.2 ms	Yes	Channel
Hardware interrupt, rising edge [2]	• Enabled • Disabled	Disabled	Yes	Channel
Hardware interrupt, falling edge [2]	• Enabled • Disabled	Disabled	Yes	Channel
Pulse stretching [2]	• None • 0.05 s • 0.1 s • 0.2 s • 0.5 s • 1 s • 2 s	None	Yes	Channel
Diagnostics encoder supply	• Enabled • Disabled	Disabled	Yes	Channel
Parameters of the analog inputs				
Measurement type	• Disabled • Current (2-wire transducer)	Current (2-wire transducer)	Yes	Channel

Parameter	Value range	Default	Parameter reassignment in RUN	Efficiency range
Measuring range	• 0 to 10 mA • 0 to 20 mA • 4 to 20 mA • 4 to 20 mA HART There is no underrange in the ranges 0 to 10 mA or 0 to 20 mA i.e. the smallest analog value is zero.	4 to 20 mA HART	Yes	Channel
Diagnostics encoder supply	• Enabled • Disabled	Enabled	Yes	Channel
Diagnostics, Wire break	• Enabled • Disabled	Enabled	Yes	Channel
Diagnostics short-circuit to L +	• Enabled • Disabled	Enabled	Yes	Channel
Diagnostics overflow	• Enabled • Disabled	Enabled	Yes	Channel
Diagnostics underflow	• Enabled • Disabled	Enabled	Yes	Channel
Diagnostics HART	• Enabled • Disabled	Enabled	Yes	Channel
Wire break limit	• 1.185 mA • 3.6 mA	1.185 mA	Yes	Channel
Smoothing	• None • Weak • Medium • Strong	None	Yes	Channel
Interference frequency suppression	• 60 Hz (integration time 16.6 ms) • 50 Hz (integration time 20 ms) • 10 Hz (integration time 100 ms) At 50 Hz, the 400 Hz noise is automatically also filtered	10 Hz	Yes	Channel
Number of HART repetitions	0…10	5	Yes	Channel
Hardware interrupt high limit 1/2	• Enabled • Disabled	Disabled	Yes	Channel
Hardware interrupt low limit 1/2	• Enabled • Disabled	Disabled	Yes	Channel

Parameter	Value range	Default	Parameter reassignment in RUN	Efficiency range
High limit 1/2	Value	20 mA	Yes	Channel
Low limit 1/2	Value	4 mA at 4 to 20 mA 1 µA at 0 to 10 mA and 0 to 20 mA	Yes	Channel

[1] If you use simple sensor contacts, you will need to connect a resistor in parallel to allow wire break diagnostics when the contacts are open (sensor resistance for wire break diagnostics: 15 kΩ to 18 kΩ).

[2] When the time stamp (accuracy 1 ms) is enabled, the input delay on all channels is switched off and the pulse stretching and hardware interrupt for rising/falling edge is disabled on all channels (not adjustable).

Note

Unused channels

In the parameter assignment, "disable" analog inputs that are not used. You can then use these inputs as digital inputs.

Parameter dependencies in mixed mode

You can operate each of the module's 16 inputs either as digital inputs or as analog inputs.

You can operate each of the module's 16 outputs either as digital outputs or as sensor supplies for the corresponding inputs. If you operate an output as a sensor supply, it is switched on when the corresponding input is enabled. All output diagnoses are assigned to the corresponding input.

4.3 Explanation of the module/channel parameters

Diagnostics, Missing supply voltage L+

Enabling of the diagnostics for missing or insufficient supply voltage L+.

IO redundancy

You can configure two identical modules redundantly. To do so, plug both modules into a redundant terminal block side by side. You can find additional information on mounting modules in an IO redundancy configuration in the ET 200SP HA System Manual, section "Installing", "Installing terminal block".

In IO redundancy mode, the left module is the master and the right module the slave.

The two redundant modules measure the process simultaneously and independently. The two redundant modules form diagnostics, interrupts and process values. The process values are based on the measured values of the respective leading channel that measures with low resistance in the process. By default, the channels of the master are the leading channels. If a module fails or when failure of a channel is detected, failover is performed for the affected leading channels to the partner module. Once an error has been corrected, there is no changeover of the leading channels involved.

The HART communication can only be performed over the leading channel.

Potential group

A potential group consists of a group of adjacent I/O modules within an ET 200SP HA station that share a supply voltage.

A potential group starts with a light terminal block through which the necessary supply voltage is supplied for all I/O modules in the group. The light-colored terminal block interrupts the self-assembling voltage buses to the left neighbor

All other I/O modules of this potential group are plugged into dark terminal blocks. I/O modules on dark terminal blocks take the potentials of self-assembling voltage rails from the left neighbor.

A potential group ends with the dark terminal block, which is followed by a light terminal block or a server module in the station configuration.

You can find additional information on the configuration of the potential group in the system manual *SIMATIC; Distributed I/O System; ET 200SP HA*.

See also

Configurations of the I/O module AI-DI 16/DQ16x24VDC HART HA (Page 17)

4.4 Explanation of the digital output parameters

Channel mode DO

Specifies whether the digital output is to be enabled, disabled or operated as a sensor supply for the corresponding input.

If the output is operated as a sensor supply for the corresponding input, the output is no longer available as a digital output. In this case, the output is switched on when the corresponding input is enabled. All output diagnoses are assigned to the corresponding input.

Diagnostics, Short-circuit to ground

When the digital output is enabled, you can enable diagnostics for the sensor supply that report a digital output short circuit to M.
A short-circuit to M is only recognized if the output is switched (output value = 1).

Note

Short-circuit signal

If the output at the active short-circuit is deactivated (output value = 0), the diagnostics "Short-circuit to M" is reset.

Diagnostics, Wire break

When the digital output is enabled and the "Wire break test" parameter is set, you can enable the wire break diagnostics.

Wire break test

When the digital output is enabled, you can enable or disable the wire break test current. The module can only detect a wire break and trigger diagnostics if the wire break test current is enabled. Wire break detection does not depend on the status of the digital output and is available with digital output control with both 0 and 1.

Reaction to CPU STOP

Determines the reaction of the digital output to CPU STOP or to failure of communication between the interface module and CPU.

Substitute value

The substitute value is output by the module at CPU STOP if you set the "Reaction to CPU STOP" parameter to "Substitute value".

4.5 Explanation of the digital input parameters

Channel mode DI

Specifies whether the digital input is enabled or disabled.

When the digital input is enabled, the input can no longer be set as an analog input. The corresponding analog input must be disabled.

Diagnostics encoder supply

If the corresponding output is operated in "sensor supply" mode, the digital input sensor supply is monitored for overload and for short circuit to M.

Input delay

Signal faults at the digital input can be suppressed with this parameter. Signal changes are only recorded if they are steadily pending for longer than the set input delay time.

Hardware interrupts

Specifies whether a hardware interrupt is disabled and wherein edge at digital input a hardware interrupt is generated.

Pulse stretching

Pulse stretching is a function for changing a digital input signal. A pulse at a digital input is stretched to at least the configured length. The input pulse is not changed if it is already longer than the configured length.

If hardware interrupts are supported, the pulse-stretched signal is the signal that triggers a hardware interrupt.

Principle of pulse stretching

The figure below provides example to illustrate whether or not and how input pulses are changed.

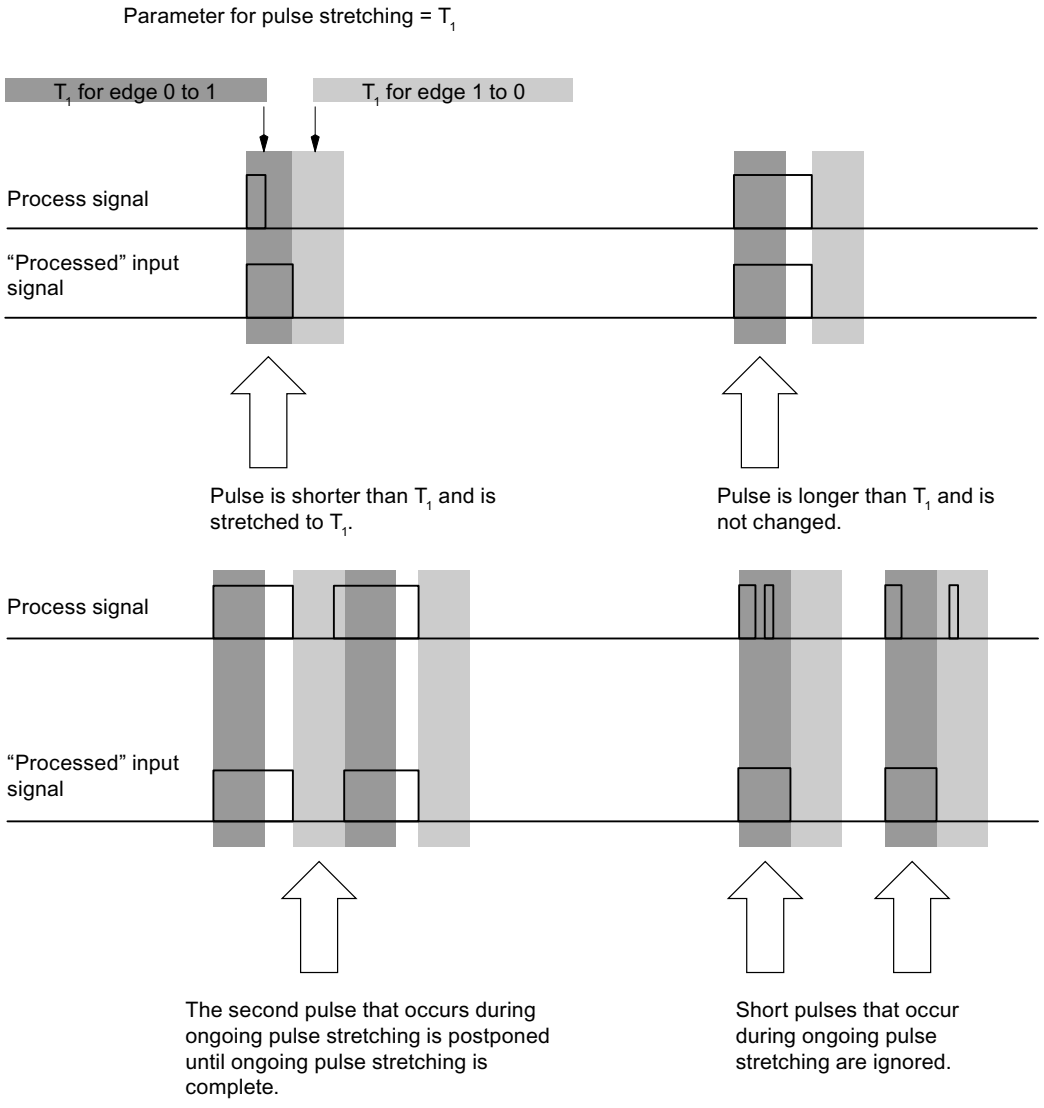

Figure 4-1 Principle of pulse stretching

4.6 Explanation of the analog input parameters

Measurement type/measuring range

The I/O module supports the following measuring ranges:

Measurement type	Measuring range	Trigger with interference frequency suppression		
		10 Hz	50 Hz	60 Hz
Disabled	--	--	--	--
Current (2-wire transducer)	0 to 10 mA	15 bits plus sign	15 bits plus sign	14 bits plus sign
	0 to 20 mA	15 bits plus sign	15 bits plus sign	15 bits plus sign
	4 to 20 mA			
	4 to 20 mA HART			

The resolution of the analog values depends on the set interference frequency suppression.

If an analog input is enabled for current measurement, the input can no longer be set as a digital input. The corresponding digital input must be disabled.

HART mode is only possible with a measuring range of 4 to 20 mA.

An overview of the measuring range and the overflow, overrange, etc. can be found in section Representation of analog values in the current measuring ranges (Page 95).

Diagnostics encoder supply

If the corresponding output is operated in "sensor supply" mode, the sensor supply of the analog input is monitored for overload and short circuit to M.

Short circuit diagnostics

Enables monitoring for an analog input short circuit to the sensor supply or to L+.

Short circuit and overflow diagnostics can be enabled simultaneously. If both diagnostics occur simultaneously, the short-circuit diagnostics is output.

Diagnostics, Wire break

You can enable wire break diagnostics for a measuring range of 4 mA to 20 mA or 4 mA to 20 mA HART. Diagnostics is triggered when the current flow is below the configured wire break limit.

You can enable wire break and underflow diagnostics simultaneously. If both diagnostics occur simultaneously, the diagnostics wire break is output.

Diagnostics overflow

Enabling of the diagnostics when the measured value exceeds the overrange.

Diagnostics underflow

Enabling of the diagnostics when the measured value falls below the underrange.

Diagnostics HART

Enables diagnostics for HART frame-specific monitoring and the status information provided by the connected field device in a HART frame (HART device status).

HART diagnoses are output as maintenance events.

Wire break limit

You use this to specify the current limit for detecting wire breaks. When the current is below the configured wire break limit, the measured value is declared as invalid and, when wire break diagnostics is enabled, a corresponding diagnosis is generated. The value status of the analog input is set to "bad".

With a wire break limit of 3.6 mA, the measured value becomes invalid when the current falls below 3.6 mA and is marked as valid again when it rises above 3.8 mA.

There is no hysteresis for a wire break limit of 1.185 mA.

Smoothing

The individual measured values are filtered to smooth them. Four smoothing settings are available.

Smoothing time = number of module cycles (k) x cycle time of the module.

The figure below shows the number of module cycles after which the smoothed analog value approached 100%, in line with the set smoothing. This applies to every signal change at the analog input.

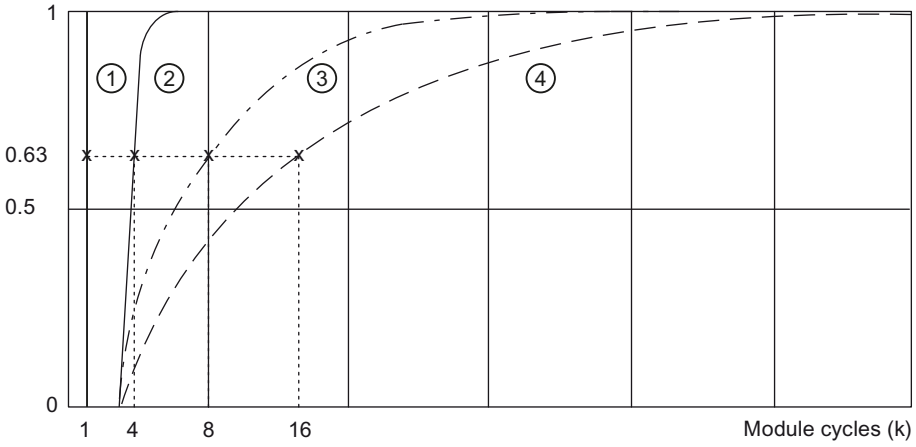

① No smoothing (k = 1)
② Weak (k = 4)
③ Medium (k = 8)
④ Strong (k = 16)

Figure 4-2 Smoothing of the analog value

Interference frequency suppression

Suppresses the interference that is caused by the frequency of the alternating voltage network used.

The frequency of the AC supply system may interfere with the measured value, in particular in low voltage ranges.

When HART operation is activated, an interference frequency suppression of 10 Hz is recommended to prevent the HART signal from influencing the analog value.

Number of HART repetitions

Specifies the number of HART frame repetitions. If the module receives no response or a response with errors to a HART frame sent to the field device, the frame is repeated i.e. sent to the field device again.

Hardware interrupt 1 / 2

A hardware interrupt is enabled if high limit 1 / 2 is exceeded or low limit 1 / 2 is violated.

Low limit 1 / 2

Specify a threshold which triggers a hardware interrupt when violated.

High limit 1/2

Specify a threshold which triggers a hardware interrupt when violated.

4.7 HART mapping parameters

A maximum of 8 HART variables can be configured (mapped) to the address space of the I/O module with the HART mapping parameters.

If you want to use a maximum of 8 HART variables in the input area of the I/O module, configure these parameters in the properties dialog of the I/O module.

Parameters

Table 4-1 HART mapping parameters of the I/O module

Parameter		Value range	Default	Parameter reassignment in RUN
Variable 0	Channel	0…15	0	Yes
	Type	• Non / CiR • Primary • Secondary • Tertiary • Quaternary	Non / CiR	Yes
: :				
Variable 7	Channel	0…15	0	Yes
	Type	• Non / CiR • Primary • Secondary • Tertiary • Quaternary	Non / CiR	Yes

Displays and interrupts

5

5.1 Status and error displays of the I/O module AI-DI 16/DQ16x24VDC HART HA

LED displays

The following figure shows the status and fault displays of the I/O module.

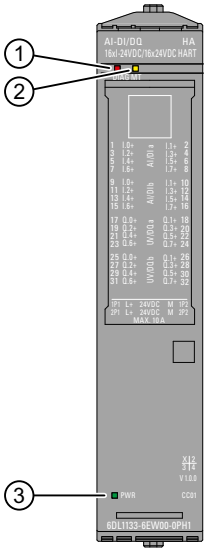

① DIAG LED (green/red)
② MT LED (yellow)
③ PWR LED (green)

Figure 5-1 LED displays

Meaning of the LED displays

The tables below explain the status, error and maintenance displays. Measures for dealing with diagnostics messages can be found in the section Diagnostics messages and maintenance events (Page 66).

DIAG LED

Table 5-1 Diagnostics display of the DIAG LED

DIAG LED	Meaning
□ Off	The power supply of the ET 200SP HA is disrupted or switched off.
☼ Flashes	Module is not configured.
■ on	Module is configured, a diagnostics message is not pending.
☼ Flashes	Module is configured, at least one diagnostic message is pending.

MT LED

Table 5-2 Maintenance display of the MT LED

MT LED	Meaning
□ Off	There is no maintenance required.
■ on	Maintenance is required, i.e. at least one maintenance event has occurred.

PWR LED

Table 5-3 Status display of the PWR LED

PWR LED	Meaning
□ Off	Supply voltage L+ missing.
■ on	Supply voltage L+ present.

5.2 Interrupts

The I/O module supports diagnostic interrupts and hardware interrupts. You can find additional information on hardware interrupts in the appendix Hardware interrupts (Page 71)

Diagnostics interrupts

Diagnostics interrupts are used by the I/O module to output both diagnostic messages and maintenance events; see also the appendix Diagnostics messages and maintenance events (Page 66).

The I/O module generates a diagnostic interrupt for the following events:

- Overtemperature
- Wire break at a digital output
- Wire break at an analog input
- High limit violated (overflow)
- Low limit violated (underflow)
- Parameter assignment error
- Supply voltage missing
- Hardware interrupt lost
- Channel/component temporarily unavailable
- Module is faulty
- Short-circuit of an analog input to sensor supply or L+
- Digital output short circuit to M
- Sensor supply short circuit / overload
- Button switch-off
- Retentive memory in carrier module defective
- Retentive memory in the terminal block defective
- Redundancy partner has different hardware/firmware
- IO redundancy warning
- IO redundancy parameter assignment inconsistent
- HART communication error
- HART field device error

Note

A pending "Module is defective" or "Excess temperature" or "Button switch-off" diagnostic is not deleted by the module without a restart.

HART function

6

The HART function is available in the following conditions:

- The I/O module AI-DI 16/DQ16x24VDC HART HA is configured in mixed mode.
- The relevant channel is configured as an analog input.

Definition

"HART" stands for "Highway Addressable Remote Transducer".

Using the HART function, you can exchange data between the I/O module and the connected field devices. The HART protocol is generally accepted as a standard protocol for communication with intelligent field devices: HART is a registered trademark of the HART Communication Foundation (HCF), which owns all the rights to the HART protocol. You can find detailed information about HART in the HART specification.

Advantages of HART

Using the AI-DI 16/DQ16x24VDC HART HA offers the following benefits:

- Connection compatibility with standard analog modules: 4 to 20 mA current loop
- Additional digital communication using the HART protocol
- Numerous field devices with HART functions are in use
- The I/O module enables the use of HART devices in an IO device based on the ET 200SP HA.

Use in the system

The I/O module is used in an IO device based on the ET 200SP HA.

You can connect a HART field device to each channel (monodrop mode).

The I/O module operates as the HART master, the field devices as HART slaves.

The maximum 16 channels communicate in parallel.

6.1 How HART works

Introduction

The HART protocol describes the physical form of the transfer: transfer procedures, message structure, data formats and commands.

HART signal

The figure below shows the analog signal with the modulated HART signal (FSK method), which consists of sine waves of 1200 Hz and 2200 Hz and has a mean value of 0. It can be filtered out using an input filter so that the original analog signal is available again.

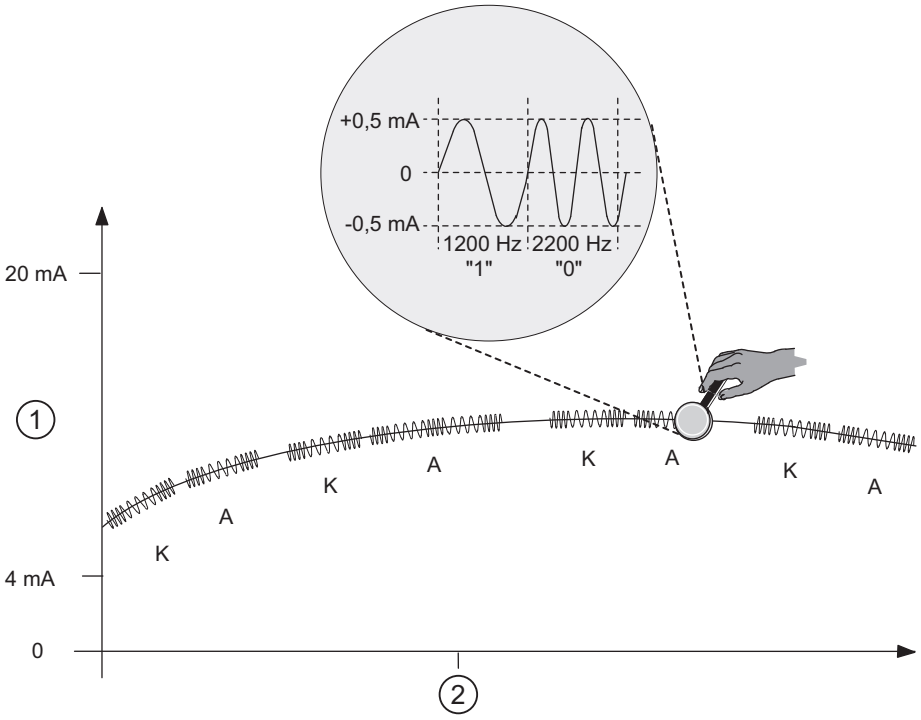

Figure 6-1 The HART signal

①	Analog signal
②	Time (seconds)
K	Command
A	Response

HART communication

The I/O module AI-DI 16/DQ16x24VDC HART HA processes HART communication in parallel mode, in other words for all channels simultaneously.

With enabled HART operation, the I/O module automatically sends HART commands to the connected field devices. For each channel, commands are always sent time about with any

pending external HART commands that are received over the command interface of the module, see HART command interface (Page 81).

Commissioning a HART field device

Only HART field devices that are set to the short frame address 0 can be operated. If a HART field device with a different short frame address is connected or a connected field device is reconfigured to a short frame address other than 0 during operation, the module starts a scan of all possible short frame addresses at the next re-establishment of HART communication (command 0 with short frame addresses 1...63). As soon as the connected field device responds, it is converted to the short frame address 0 (HART command 6) by the module. During the scan, the module reports a HART communication error.

HART commands

The assignable properties of the HART field devices (HART parameters) can be set with HART commands and read by means of HART replies. The HART commands and their parameters are divided into three groups with the following properties:

- Universal
- Common practice
- Device-specific

Universal commands must be supported by all manufacturers of HART field devices and common practice commands should be supported. There are also device-specific commands that apply only to the particular field device.

Examples of HART commands

The following two tables show examples of HART commands:

Table 6-1 Examples of universal commands

Command	Function
0	Read manufacturer and device type - field devices can only be addressed by their short frame address with command 0
11	Reads manufacturer and device type
1	Reads primary variable and unit
2	Reads current and percentage of range, digitally as floating-point number (IEEE 754)
3	Read up to four predefined dynamic variables (primary variable, secondary variable, etc.)
13, 18	Reads or writes process tag name ("tag"), description and date (dates are also sent)

Table 6-2 Examples of common practice commands

Command	Function
36	Sets high range limit
37	Sets low range limit
41	Perform self-test
43	Sets the primary variable to zero

Structure of the HART protocol

Each HART frame sent from the AI-DI 16/DQ16x24VDC HART HA to the connected field device (job frame) and each HART frame (response frame) received by the field device has the following basic structure:

PREAMBLE	STRT	ADDR	COM	BCNT	STATUS	DATA	CHK

PREAMBLE: Bytes (0xFF) for synchronization.
5 to 20 bytes depending on parameter assignment

STRT: Start character (start delimiter)

ADDR: Address of the field device (1-byte short address or 5-byte long address)

COM: HART command number

BCNT: Byte count, number of consecutive bytes without checksum

STATUS: HART device status (1st and 2nd status byte). Only present for a response frame. For structure of HART device status, see below.

DATA: Transferred user data / parameters, quantity depending on command (0…230 bytes)

CHK: Checksum

With the exception of the preamble bytes, this structure is contained in the communication data of the HART command interface. See section HART job and response data records (Page 83).

HART responses always contain data. Together with a HART response, status information (HART device status, 1st and 2nd status bytes) is always sent together with a HART response. You should evaluate these to make sure the response is correct.

Structure of HART device status (1st and 2nd status bytes)

Table 6-3 1st status byte

When bit 7 = 1: "Communication error"	
Bit 6 = 1	Parity error
Bit 5 = 1	Overflow
Bit 4 = 1	Frame error (framing)
Bit 3 = 1	Checksum error
Bit 2 = 0	Reserved
Bit 1 = 1	Overflow in input buffer
Bit 0 = 0	Reserved
When bit 7 = 0: "No communication error" When bit 0...6: "Specific in line with response frame"	

Table 6-4 2nd status byte

Bit 7 = 1	Device fault
Bit 6 = 1	Configuration changed
Bit 5 = 1	Startup (cold start)
Bit 4 = 1	Additional status information available
Bit 3 = 1	Fixed analog output current setting
Bit 2 = 1	Analog output current saturated
Bit 1 = 1	Secondary variable outside the limits
Bit 0 = 1	Primary variable outside the range

HART-Fast-Mode

AI-DI 16/DQ16x24VDC HART HA supports the processing of HART commands as SHC sequence ("Successive HART Command").
If a HART command with set SHC bit is detected, this channel is reserved for external HART commands for approximately 2 seconds. No internal HART commands are output.

Burst mode

The AI-DI 16/DQ16x24VDC HART HA does not support burst mode. HART commands with set burst bit are ignored and are not forwarded to the connected field device.

6.2 HART applications

System environment for the use of HART

To use an intelligent field device with HART functionality, you require the following system environment:

- 4 to 20 mA current loop
- Connecting measuring transmitters to the I/O module

HART parameter assignment tool "Client":
You can assign the HART parameters using an external handheld operating device (HART Handheld) or a HART configuration tool (PDM). Both assume the function of a "client":

The parameter assignment tool affects the entire I/O module; the HART handheld is connected in parallel to the field device.

The PDM (Process Device Manager) is available standalone or integrated into STEP7 HW Config.

HART system integration:
The I/O module takes on the function of a "master" by receiving commands from the HART parameter assignment tool, for example, forwarding them to the smart field device and sending back the responses. The interface of the I/O module is made up of data records that are transferred internally between the IM and I/O module via the ET 200SP HA IO device. The data records must be created and interpreted by the client.

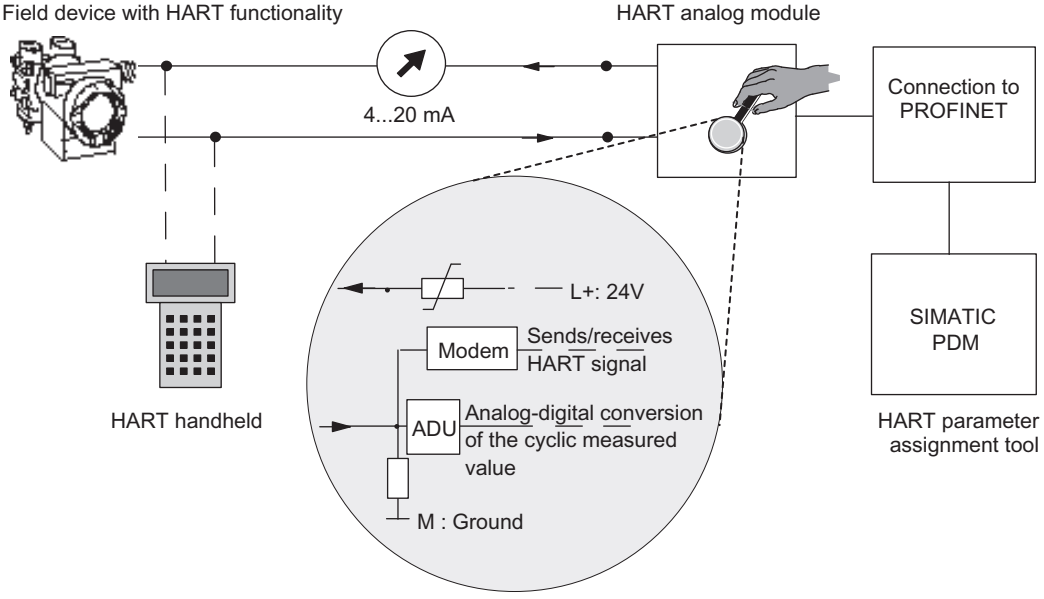

Figure 6-2 System environment for the use of HART

Error management

The two HART status bytes (HART device status) that are transferred with each field device response contain error statements about HART communication, HART commands and the device status.
These statements are evaluated by the I/O module and provided in the system in maintenance messages.

Configuration/commissioning

You configure the I/O module in the SIMATIC system with HW Config. Actual analog value acquisition and HART variable use are configured for the individual channels in the input address space of the I/O module.
You can configure one field device per channel. The configuration/parameter assignment of the connected field device is then carried out from this configured field device using PDM or the EDD for the ET 200SP HA.

Parameter reassignment of the field devices

The I/O module generally accepts triggered reconfigurations for field devices. Access rights can only be allocated in the configuration tool.

To reassign parameters of the field devices connected to the I/O module, proceed as follows:

1. You trigger reconfiguration of a field device with a HART command entered using the SIMATIC PDM configuration tool.
2. Once you have reconfigured a HART field device, the corresponding bit is set in the HART device status of the connected field device (in the 2nd status byte).
3. As a result of field device reconfiguration, the module triggers a "Configuration changed" maintenance message if such a message is enabled. This maintenance message is a notice, not an error, and is automatically deleted by the module after approximately 1 minute.

If enabled, a maintenance message can also be triggered by a new parameter assignment with the handheld device.

6.3 HART variables

Introduction

Numerous HART field devices make available additional measured quantities (e.g. sensor temperature).

A maximum of four HART variables supported by the connected field device are read cyclically for each channel with enabled HART functionality. The HART variables are read automatically via the HART command 3 (for field devices with HART Rev. 5 and 6) or via command 9 (for field devices with HART Rev. 7 or later).

These four HART variables for each channel are always saved in HART variable data record 121 and can be read at any time.

With I/O module AI-DI 16/DQ16x24VDC HART HA, you can also choose from the following options:

- You can map a maximum of 8 HART variables to the input address space of the I/O module. The HART variables are assigned to a channel in the properties dialog of the module. This makes it easy to process measured values from the field device as input data in the automation device.
- You can configure 1 or 4 multiHART ranges in the input/output address space of the I/O module. You can read all HART variables available in the I/O module with each of these multiHART areas. The multiHART ranges are specified in the properties dialog of the I/O module.

Address assignment

Each HART variable occupies 5 bytes of input data. As soon as you configure (map) at least one HART variable in the input address space, the addresses for all 8 tags are assigned (40 bytes).

When you use the multiHART ranges, the input and output address space are also occupied as follows:

- An additional 6 bytes of input address space and 1 byte of output address space is occupied for one multiHART range
- An additional 24 bytes of input address space and 4 bytes of output address space is occupied for four multiHART ranges

Configuration of HART variables

You can configure up to 8 HART variables in the properties dialog of the I/O module. You select these from the four HART variables provided by each channel:

- PV (Primary Variable)
- SV (Secondary Variable)
- TV (Tertiary Variable)
- QV (Quaternary Variable)

When HART mode is enabled, the module cyclically reads the variables provided by the connected field devices itself.

Configuration of multiHART ranges

You can use one or 4 multiHART ranges with the module. Select whether or not to use multiHART ranges in the properties dialog of the I/O module.

When HART mode is enabled, the I/O module cyclically reads the variables provided by the connected field devices itself. You can request and read one of these HART variables over a multiHART range.

Quality code

The quality code describes the process status of the corresponding HART variables.

Basic structure of the quality code

Bit	7…6	5…2	1…0
	Quality 0 0: Bad 0 1: Uncertain 1 0: Good 1 1: Good	Sub-status Coded according to "PROFIBUS PA Profile for Process Control Devices"	Limits 0 0: OK 0 1: Low limit 1 0: High limit 1 1: Constant

The quality codes generated by the I/O module depend on the HART revision of the field device used.

For field devices with HART Revision 5 and 6

The quality code is formed exclusively from the 1st and 2nd status byte (HART device status) of the response frames (HART command 3).

Quality code	Meaning (process status)	
80_H	Value is okay	Also applies when the following bits are set in the 2nd status byte of the HART response frame: • Configuration changed • Startup (cold start) • Fixed analog output current setting
78_H	Value is uncertain	Also applies when the following bits are set in the 2nd status byte of the HART response frame: • Additional status information available • Analog output current saturated • Secondary variable outside the limits • Primary variable outside the range
84_H	Response code RC8: Update error	

Quality code	Meaning (process status)	
24_H	Response code RC16: Access restricted	Request from field device refused
23_H	Communication error or HART variable not present in the field device	
37_H	Initialization value from analog module	After module start-up, after incorrect operation of the multiHART interface or after redundancy failover to the standby channel[1]
00_H	Initialization value from S7 system	

[1] A channel is in standby mode when a redundancy failover occurs due to a fault in an IO-redundant module

For field devices with HART revision 7 or later

The quality code is formed from the 1st status byte (HART device status) and the "Device variable status" (DVS) of the response frames (HART command 9).

Quality code	Meaning (process status)	
80_H	Value is okay	
89_H	"Good" with "low limit"	Process status, formed from the "Device variable status" (DVS) of the response frames with corresponding limits (see above).
$8A_H$	"Good" with "high limit"	
$28_{H...}2B_H$	"Bad"	
$68_{H...}6B_H$	"Poor accuracy"	
$78_{H...}7B_H$	"Manual" or "Fixed" (manually controlled or fixed value)	
$88_{H...}8B_H$	"More device variable state available" (additional status information available)	
84_H	Response code RC8: Update error	
24_H	Response code RC16: Access restricted	Request from field device refused
23_H	Communication error or HART variable not present in the field device	
37_H	Initialization value from analog module	After module start-up, after incorrect operation of the multiHART interface or after redundancy failover to the standby channel[1]
40_H	Read alternatively via command 3	
00_H	Initialization value from S7 system	

[1] A channel is in standby mode when a redundancy failover occurs due to a fault in an IO-redundant module

Technical specifications

7

Technical specifications of the AI-DI 16/DQ16x24VDC HART HA

Article number	6DL1133-6EW00-0PH1
General information	
Product type designation	AI-DI 16/DQ 16x24VDC HART HA
HW functional status	FS01
Firmware version	V1.0
• FW update possible	Yes
Usable terminal block	TB type H1 and M1
Color code for module-specific color identification plate	CC00
Product function	
• I&M data	Yes; I&M0 to I&M3
Engineering with	
• PCS 7 configurable/integrated as of version	V9.0
Operating mode	
• DI	Yes
• Counter	No
• DQ	Yes
• DQ with energy-saving function	No
• PWM	No
• Oversampling	No
• MSI	No
• MSO	No
Redundancy	
• Redundancy capability	Yes; With TB type M1
CiR – Configuration in RUN	
Reparameterization possible in RUN	Yes
Supply voltage	
Rated value (DC)	24 V
permissible range, lower limit (DC)	19.2 V
permissible range, upper limit (DC)	28.8 V
Reverse polarity protection	Yes
Input current	
Current consumption (rated value)	80 mA; without sensor supply
Current consumption, max.	90 mA; without sensor supply
Output voltage	
Rated value (DC)	24 V

Article number	6DL1133-6EW00-0PH1
Encoder supply	
Number of outputs	16
Output voltage encoder supply, min.	18.2 V
Short-circuit protection	Yes; per channel, electronic
24 V encoder supply	
• 24 V	Yes
• Short-circuit protection	Yes; Electronic (response threshold 0.7 A to 1.5 A)
Power loss	
Power loss, typ.	4.5 W; without sensor supply
Address area	
Address space per module	
• Address space per module, max.	42 byte; Address space per module (analog): 42 bytes. Of which 34 bytes for outputs, 2 bytes for outputs and 6 bytes for QI information. Address space per module (digital): 26 bytes. Of which 2 bytes for inputs, 2 bytes for outputs, 18 bytes for SoE, and 4 bytes for QI information
• Address space per module with HART, max.	82 byte; 34-byte inputs, 2-byte outputs, 40 bytes for HART secondary variables, and 6 bytes for QI information
• Address space per module with MultiHART, max.	70 byte; 34-byte inputs, 2-byte outputs, 24-byte HART inputs, 4-byte HART outputs, and 6 bytes for QI information
Digital inputs	
Number of digital inputs	16
Digital inputs, parameterizable	Yes
Source/sink input	Yes; P-reading
Input characteristic curve in accordance with IEC 61131, type 1	Yes
Input characteristic curve in accordance with IEC 61131, type 2	No
Input characteristic curve in accordance with IEC 61131, type 3	Yes
Pulse extension	Yes
• Length	Off, 50 ms, 100 ms, 200 ms, 500 ms, 1 s, 2 s
Time stamping	Yes; Resolution 10 ms
Time stamp (with precision of 1 ms)	Yes; Resolution 1ms
Edge evaluation	Yes; rising edge, falling edge, edge change
Input voltage	
• Type of input voltage	DC
• Rated value (DC)	24 V
• for signal "0"	-30 to +5V
• for signal "1"	+11 to +30V
Input current	
• for signal "1", typ.	2.5 mA
Input delay (for rated value of input voltage)	

Article number	6DL1133-6EW00-0PH1
for standard inputs	
– parameterizable	Yes; 0.05 / 0.1 / 0.4 / 0.8 / 1.6 / 3.2 / 12.8 / 20 ms (in each case + delay of 30 to 500 µs, depending on line length)
Cable length	
• shielded, max.	1 000 m
• unshielded, max.	600 m
Digital outputs	
Number of digital outputs	16
Current-sinking	No
Current-sourcing	Yes
Short-circuit protection	Yes
• Response threshold, typ.	0.7 to 1.3 A
Open-circuit detection	Yes
Overload protection	Yes
Limitation of inductive shutdown voltage to	L+ -(37 to 41V)
Controlling a digital input	Yes
Switching capacity of the outputs	
• with resistive load, max.	0.5 A
• on lamp load, max.	5 W
Load resistance range	
• lower limit	48 Ω
• upper limit	12 kΩ
Output current	
• for signal "1" rated value	0.5 A
• for signal "0" residual current, max.	0.7 mA
Output delay with resistive load	
• "0" to "1", typ.	50 µs
• "1" to "0", typ.	100 µs
Parallel switching of two outputs	
• for uprating	No
• for redundant control of a load	Yes
Switching frequency	
• with resistive load, max.	100 Hz
• with inductive load, max.	2 Hz
• on lamp load, max.	10 Hz
Total current of the outputs	
• Current per channel, max.	0.5 A
• Current per module, max.	2 A
Cable length	
• shielded, max.	1 000 m
• unshielded, max.	600 m
Analog inputs	

Article number	6DL1133-6EW00-0PH1
Number of analog inputs	16
permissible input current for current input (destruction limit), max.	30 mA
Input ranges (rated values), currents	
• 0 to 20 mA	Yes; 16 bit incl. sign
• Input resistance (0 to 20 mA)	250 Ω
• 4 mA to 20 mA	Yes; 16 bit incl. sign
• Input resistance (4 mA to 20 mA)	250 Ω
Analog value generation for the inputs	
Measurement principle	integrating (Sigma-Delta)
Integration and conversion time/resolution per channel	
• Resolution with overrange (bit including sign), max.	16 bit; Resolution with overrange (bit including sign), max. 16 bits, exception: 15 bits at 60 Hz interference suppression and 0 to 10 mA
• Integration time, parameterizable	Yes; channel by channel
Smoothing of measured values	
• parameterizable	Yes; none, weak, medium, strong, channel-by-channel
Encoder	
Connection of signal encoders	
• for current measurement as 2-wire transducer	Yes
Connectable encoders	
• 2-wire sensor	Yes
– permissible quiescent current (2-wire sensor), max.	1.5 mA
Errors/accuracies	
Linearity error (relative to input range), (+/-)	0.01 %
Temperature error (relative to input range), (+/-)	0.005 %/K
Crosstalk between the inputs, min.	60 dB
Repeat accuracy in steady state at 25 °C (relative to input range), (+/-)	0.05 %
Operational error limit in overall temperature range	
• Current, relative to input range, (+/-)	0.5 %
Basic error limit (operational limit at 25 °C)	
• Current, relative to input range, (+/-)	0.1 %
Interrupts/diagnostics/status information	
Diagnostics function	Yes
Substitute values connectable	Yes
Alarms	
• Diagnostic alarm	Yes
• Limit value alarm	Yes; two upper and two lower limit values in each case
Diagnostic messages	

Article number	6DL1133-6EW00-0PH1
• Monitoring the supply voltage	Yes
• Wire-break	Yes; channel by channel
• Short-circuit to M	Yes; Encoder supply to M, channel by channel
• Group error	Yes
• Overflow/underflow	Yes; channel by channel
Diagnostics indication LED	
• MAINT LED	Yes; yellow LED
• Monitoring of the supply voltage (PWR-LED)	Yes; green PWR LED
• Channel status display	No
• for channel diagnostics	No
• for module diagnostics	Yes; green/red DIAG LED
Potential separation	
Potential separation channels	
• between the channels	No
• between the channels and backplane bus	Yes
• Between the channels and load voltage L+	No
Isolation	
Isolation tested with	1 500 V DC/1 min, type test
Ambient conditions	
Ambient temperature during operation	
• horizontal installation, min.	-40 °C
• horizontal installation, max.	70 °C; Observe derating
• vertical installation, min.	-40 °C
• vertical installation, max.	60 °C; Observe derating
Dimensions	
Width	22.5 mm
Height	115 mm
Depth	138 mm
Weights	
Weight, approx.	150 g

Note

When the encoder supply U_{Vn} from the module (terminal 17...32) is used, the following derating must be observed:

Horizontal mounting position:

Up to 70°C for up to 12 channels when using the digital outputs / encoder supplies (total current of outputs 300 mA)

Up to 70°C for 16 channels without using the digital outputs / encoder supplies

Up to 65°C for 16 channels when using the digital outputs / encoder supplies (total current of outputs 400 mA)

Up to 60°C for 16 channels when using the digital outputs / encoder supplies (total current of outputs 2 A)

Vertical mounting position:

Up to 60°C for up to 12 channels when using the digital outputs / encoder supplies (total current of outputs 300 mA)

Up to 60°C for 16 channels without using the digital outputs / encoder supplies

Up to 55°C for 16 channels when using the digital outputs / encoder supplies (total current of outputs 400 mA)

Up to 50°C for 16 channels when using the digital outputs / encoder supplies (total current of outputs 2 A)

Maximum supply voltage ripple during HART operation

- 390 mVpp at 50 Hz
- 8.3 mVpp at 300 Hz

Cycle time

The cycle time describes the period of time in which the signals from the inputs are acquired and processed, and the outputs controlled.

The cycle time depends on the parameter assignment and may differ for each channel.

Mixed mode	Cycle time
Digital inputs for additional use of 8 HART variables	8 ms
Digital inputs **without** additional use of 8 HART variables	4 ms
Analog inputs with 60 Hz interference frequency suppression	16.6 ms
Analog inputs with 50 Hz interference frequency suppression	20 ms
Analog inputs with 10 Hz interference frequency suppression	100 ms

Digital mode	Cycle time
of ongoing operation	500 µs
with time stamping	1 ms (62.5 µs for the time stamp)

Minimum pulse length

For a pulse or an edge transition to be reliably detected by the I/O module or the partner module (at IO redundancy failover), the signal status must be active for at least the time period of the minimum pulse length.

The minimum pulse length is greater than the configured input filter time and greater than the cycle time.

Redundancy failover time

With an I/O redundancy failover, the update time of the process values or the detection of an edge transition is delayed once by a maximum of this time.
The maximum redundancy failover time of the I/O module is 20 ms + cycle time.

Drivers, parameters, diagnostics messages and address space

A

A.1 Concept of the driver and diagnostics blocks

Use outside the PCS 7 environment

The following information of the appendix relates to the use of the ET 200SP HA outside the PCS 7 environment. If you do not plan to operate outside the PCS 7 environment, you do not need the information in the appendix.

Tasks of the driver and diagnostic blocks (driver blocks)

In process control systems, certain demands are placed on the diagnostics/signal processing. This includes the monitoring of modules, DP/PA slaves and DP master systems for malfunctions and failures.

To enable this, blocks are available in the PCS 7 library that implement the interface to the hardware including test functions.

These blocks perform two basic tasks:

- They provide signals from the process to the AS for further processing.
- They monitor modules, DP/PA slaves, and DP master systems for failure.

When the process signals are read in, these blocks access the process image input (or process image partition) (PII) and when the process signals are output, they access the process image output (or process image partition) (PIQ).

Concept

The concept of the driver and diagnostic blocks for PCS 7 can be characterized as follows:

- The separation between user data processing (CHANNEL blocks) and diagnostic data processing (MODULE blocks)
- The symbolic addressing of the I/O signals
- The automatic generation of the MODULE blocks by CFC

This block concept supports all modules from the list of approved modules.
When new Siemens or non-Siemens module types are integrated, the meta-knowledge for the driver generator can be extended by additional XML files (object and action lists).

Note

Note the following:

- The library with the driver blocks has to installed using the Setup program on the PC. This is the only method of ensuring that the meta-knowledge required for the driver generator is available. You must not copy the library from another computer.
- You can also use driver blocks from another library (for example, your own blocks from your own library). You can specify this additional library in the "Generate module drivers" dialog box. The driver generator then searches for the block to be imported in the library specified here. If the block is not found here, it is searched for in the library specified in the control file (XML file).
- If the S7 program contains a signal-processing block but not from one of the PCS 7 libraries, you have to specify the version of the driver library from which the driver blocks are to be imported in the "Generate module drivers" dialog box.

Time-optimized processing

To enable time-optimized processing during runtime, the organization blocks for error handling (for example, OB85, OB86) are automatically divided into runtime groups and the driver blocks are integrated in the corresponding runtime groups.

If an error occurs, the SUBNET block, for example, activates the relevant runtime group, the RACK block or MODULE block contained in the runtime group detects the error, evaluates it and outputs a process control message to the OS.

The diagnostics information of the module block (OMODE_xx output) is also transferred to the corresponding CHANNEL block (MODE input). If necessary, this information can be displayed by means of a PCS 7 block that can be operated and monitored on the OS or by means of a user block in a process picture (color change of the measured value or flashing display, etc.).

A.2 Parameter assignment

Parameter assignment in the user program

You can reconfigure individual channels of the module and HART variable mapping in RUN without this affecting the other channels.

In mixed mode, you can for example reconfigure individual input channels in RUN from digital inputs to analog inputs without this affecting other channels.

Changing parameters in RUN

The parameters are transferred to the module with the instruction "WRREC".

- Module/channel parameters using data record 128
- HART mapping over data record 130

The parameters set with STEP 7 are not changed in the CPU in the process. The parameters set with STEP 7 are therefore valid again after start-up.

Output parameter STATUS

If errors occur when transferring parameters with the "WRREC" instruction, the module continues operation with the previous parameter assignment. The STATUS output parameter contains a corresponding error code.

The STATUS output parameter is 4 bytes long and is configured as followed:

- Byte1: Function_Num, general error code
- Byte2: Error_Decode, location of the error code
- Byte3: Error_Code_1, error code
- Byte4: Error_Code_2, manufacturer-specific extension of the error code

Module-specific errors are displayed via Error_Decode = 0x80 and Error_Code_1 / Error_Code_2.

Error_ Code_ 1	Error_ Code_ 2	Cause	Solution
0xB0	0x00	Number of the data record unknown	Enter valid number for data record.
0xB1	0x01	Length of the data record is incorrect	Enter valid value for data record length.
0xB2	Varia- ble	Module cannot be reached	• Check station - is the module plugged in correctly? • Check the parameters of the WRREC instruction.
0xE0	0x01	Wrong version in header	Correct the version number of the parameter block.
0xE0	0x02	Header error (number or length of parameter block)	Correct the length and number of the parameter blocks.

Error_ Code_ 1	Error_ Code_ 2	Cause	Solution
0xE1	0x01	Reserved bit set	Check and correct the parameters
0xE1	0x02	Invalid diagnostics enable bit set for operating mode	
0xE1	0x03	Invalid hardware interrupt enable bit set for operating mode	
0xE1	0x04	Invalid value for hardware interrupt limit	
0xE1	0x07	Invalid coding for input delay	
0xE1	0x08	Invalid coding for interference frequency suppression / integration time	
0xE1	0x09	Invalid coding for smoothing	
0xE1	0x0B	Invalid coding for pulse stretching	
0xE1	0x0E	Invalid redundancy parameter assignment	
0xE1	0x10	Invalid measurement type	
0xE1	0x11	Invalid measuring range	
0xE1	0x21	Wrong number of HART repetitions	

Valid parameters

Only the values specified in the following are permitted. Values that are not listed are rejected by the module.

Every parameter data record is checked by the module. If an incorrect parameter is detected, the entire data record is rejected and the parameters of the module remain unchanged.

A.3 Parameter assignment and structure of the module and channel parameters

Structure of data record 128

Data record 128 has a length of

- 108 bytes in digital-only mode and
- 332 bytes in mixed mode.

It contains module parameters and all channel or technology parameters of the 16 channels.

In digital-only mode, there are 6 bytes of parameters per channel. These are subdivided into parameters for digital outputs and parameters for digital inputs.

In mixed mode, 20 bytes of parameters are required for each channel. These are subdivided into parameters for configuration of the digital outputs, for configuration of the digital inputs and for configuration of the analog inputs including HART.

You can specify and change other parameters and HART-specific settings with data records 131 to 146. See section HART-specific settings (Page 92).

Parameter structure in digital-only mode

Byte 0		Header information (module)
Byte 4		Module parameters
Byte 10		Header information (channel)
Byte 12	Digital output Digital input	Parameter channel 0
Byte 18	Digital output Digital input	Parameter channel 1
. . .	. . .	
Byte 102	Digital output Digital input	Parameter channel 15

Figure A-1 Structure of data record 128, digital mode

Parameter structure in mixed mode

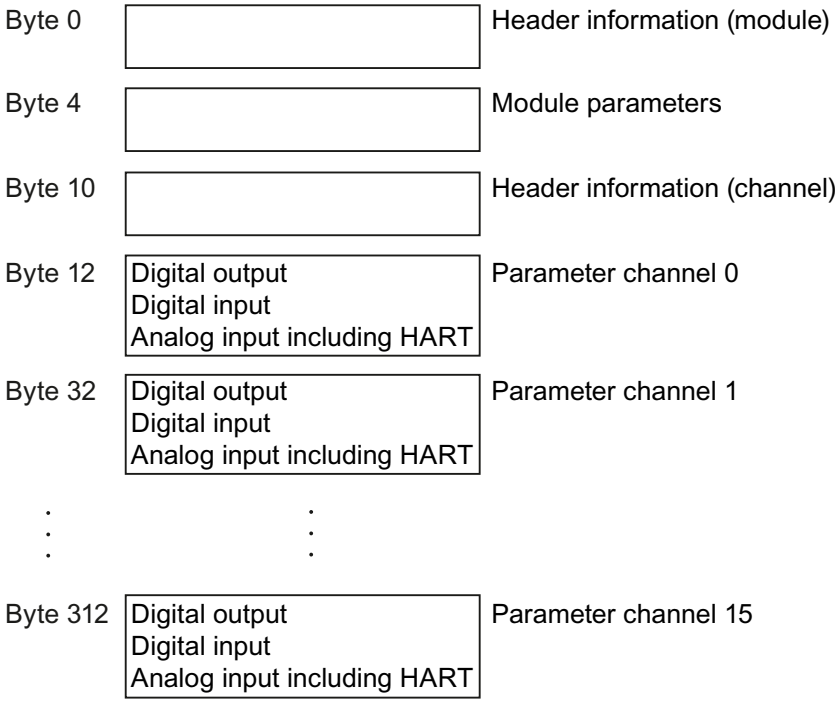

Figure A-2 Structure of data record 128, mixed mode

Header information and module parameters

The following figure shows the structure of the header information and module parameters.

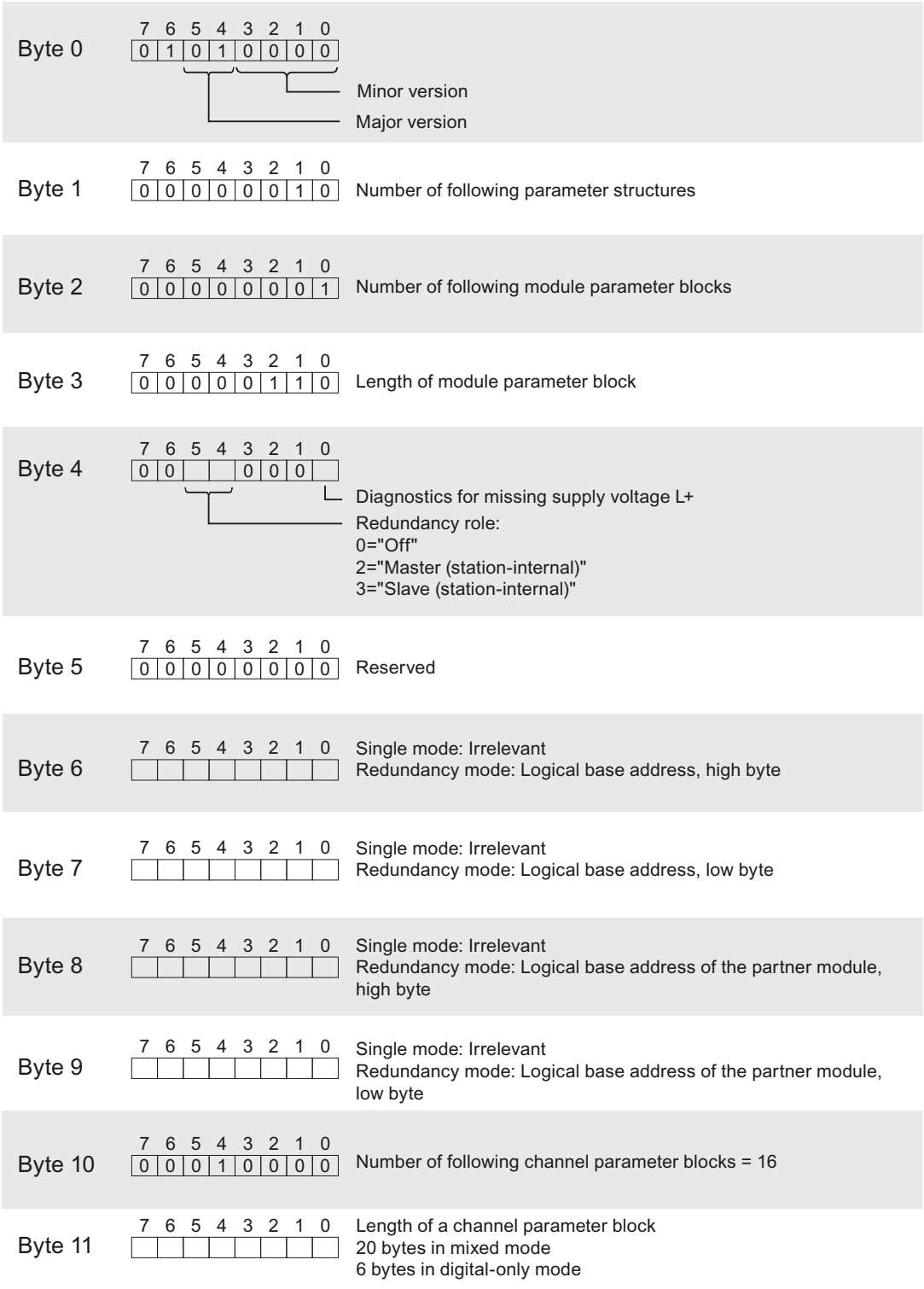

Figure A-3 Header information and module parameters, data record 128

Channel parameters

The channel parameters of each channel parameter block are subdivided into channel parameters for the digital output, channel parameters for the digital input and channel parameters for the analog input including HART.

If the I/O module is operated in digital-only mode, each channel parameter block only contains the channel parameters for the digital output (2 bytes) and the digital input (4 bytes).

x = 12 + (channel number * 6); with channel number 0…15

If the I/O module is run in mixed mode, the channel parameters of the digital output are followed by the channel parameters for the analog input including HART (14 bytes).

x = 12 + (channel number * 20); with channel number 0…15

The figures below show the structure of the channel parameters for channels 0…15.

All unused bits and the bits or bytes marked as "reserved" must be set to zero.
You activate a channel parameter by setting the corresponding bit to "1" or the corresponding value.

Channel parameters of the digital output

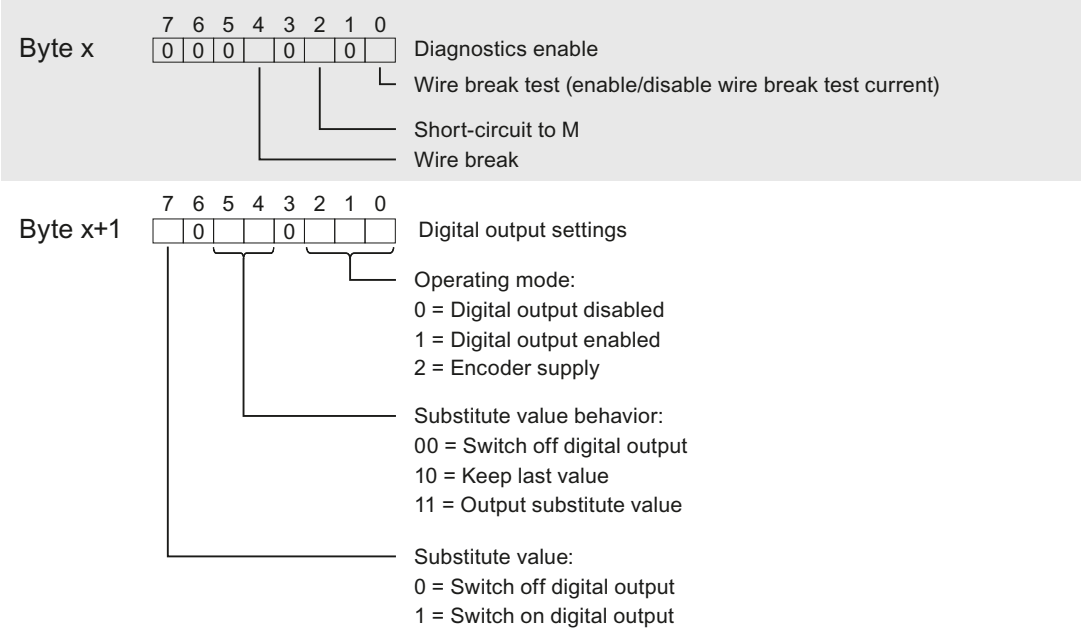

Figure A-4 Data record 128: Structure of bytes x to x+1 for channels 0 to 15

Channel parameters of the digital input

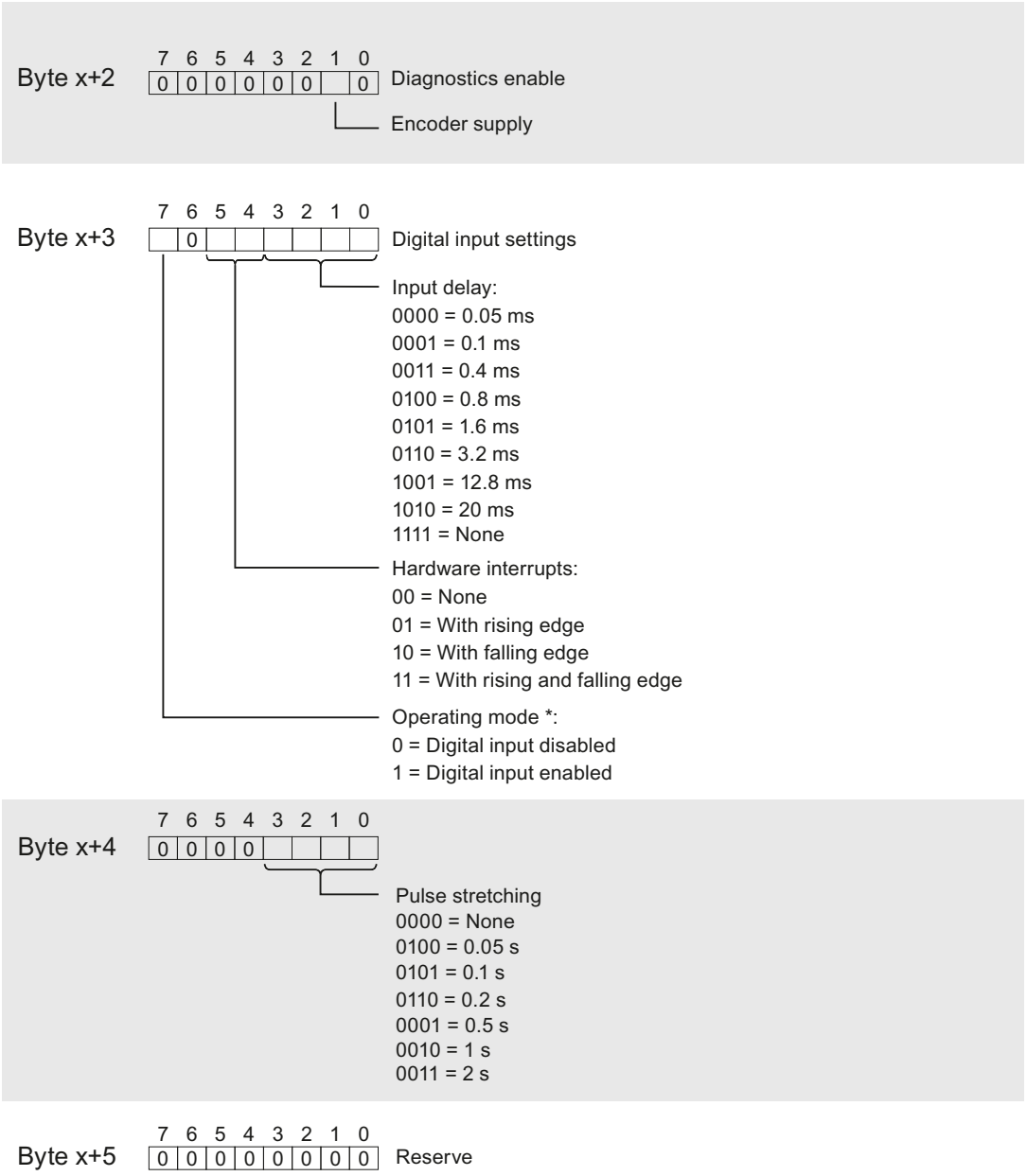

* In mixed mode, the digital input can only be enabled if the corresponding analog input is disabled.

Channel parameters of the analog input

The channel parameters for the analog input are only available if the I/O module is configured in mixed mode.

Byte x+6

7	6	5	4	3	2	1	0

Measurement type
0 = Analog input disabled
3 = Current (2-wire transmitter)

Byte x+7

7	6	5	4	3	2	1	0

Measuring range
2 = 0...20 mA
3 = 4...20 mA
7 = 4...20 mA HART
8 = 0...10 mA

Byte x+8

7	6	5	4	3	2	1	0

Smoothing:
0000 = None
0001 = Weak
0010 = Medium
0011 = Strong

Interference frequency suppression:
0001 = 60 Hz
0010 = 50 Hz
0011 = 10 Hz

Byte x+9

7	6	5	4	3	2	1	0
				0			0

Enable HART diagnostics

Wire break limit
0 = 1.185 mA
1 = 3.6 mA (with hysteresis)

Hardware interrupts
Bit 4 = 1 for violating high limit 2
Bit 5 = 1 for violating low limit 2
Bit 6 = 1 for violating high limit 1
Bit 7 = 1 for violating low limit 1

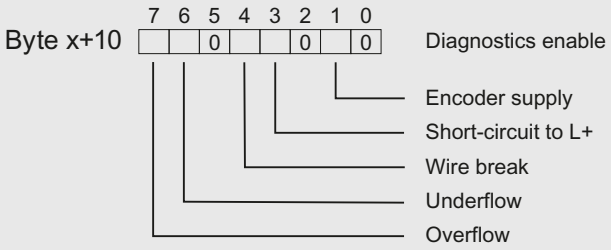
Byte x+10
7 6 5 4 3 2 1 0
0 0
Diagnostics enable
Encoder supply
Short-circuit to L+
Wire break
Underflow
Overflow

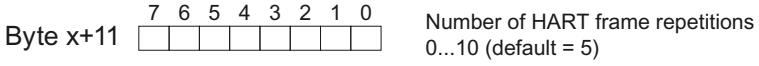
Byte x+11
7 6 5 4 3 2 1 0
Number of HART frame repetitions
0...10 (default = 5)

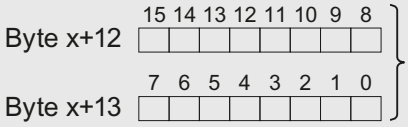
Byte x+12
15 14 13 12 11 10 9 8
Byte x+13
7 6 5 4 3 2 1 0
Hardware interrupt, high limit 1

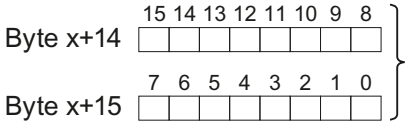
Byte x+14
15 14 13 12 11 10 9 8
Byte x+15
7 6 5 4 3 2 1 0
Hardware interrupt, low limit 1

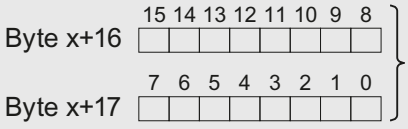
Byte x+16
15 14 13 12 11 10 9 8
Byte x+17
7 6 5 4 3 2 1 0
Hardware interrupt, high limit 2

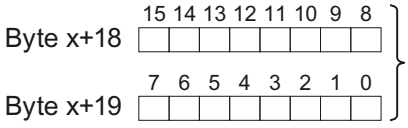
Byte x+18
15 14 13 12 11 10 9 8
Byte x+19
7 6 5 4 3 2 1 0
Hardware interrupt, low limit 2

A.4 Parameter assignment and structure of HART mapping parameters DS 130

Structure of data record 130

Data record 130 has a total length of 20 bytes.

Using the parameters of data record 130, you can configure/map up to 8 HART variables of the individual channels to the input address space of the module provided configuration with HART variables is selected in the input area; see Configurations of the I/O module AI-DI 16/ DQ16x24VDC HART HA (Page 17).

Header information

The figure below shows the structure of the header information.

Byte 0	7 6 5 4 3 2 1 0	Version = 0
Byte 1	7 6 5 4 3 2 1 0	Block length = 19 bytes
Byte 2	7 6 5 4 3 2 1 0	Block type = 75
Byte 3	7 6 5 4 3 2 1 0	Reserved = 0

Figure A-5 Header information of data record 130

Parameters

The figure below shows the parameter assignment of the 8 HART variables.

x = 4, 6, 8, 10, …, 18

Byte x	7 6 5 4 3 2 1 0	Channel number: 0...15
Byte x+1	7 6 5 4 3 2 1 0	Variable identifier: 1 = Primary 2 = Secondary 3 = Tertiary 4 = Quaternary 15 = non / CiR

Figure A-6 Parameters of data record 130

The variable identifier 15 = non / CiR with the I/O module results in no HART variables being configured or mapped; that is, the corresponding memory area in the input address area remains unallocated.

A.5 Diagnostics messages and maintenance events

Diagnostics messages

A diagnostics message is generated for every fault identified. The DIAG LED on the module flashes.

The diagnostic messages can be read out from the diagnostic buffer of the CPU, for example.

Diagnostics messages are either assigned on a channel-specific basis to an input or output, or assigned to the inputs as module messages affecting all inputs and outputs. All channels are switched off following diagnostic messages affecting the entire module. Diagnostic messages relating to individual channels only affect the corresponding digital output, digital input or analog input.

Table A-1 Diagnostics messages, their meaning and how to deal with them

Diagnostics message	Error code	Assignment	Meaning / Cause	Solution
Overtemperature	5_H	Module	• Ambient temperature is too high • Total current of digital outputs too high • Short-circuit in one or more digital outputs/encoder supplies	• Check wiring • Eliminate the cause of the excess temperature and restart the module
Wire break	6_H	Digital output	• Wire break between the module and actuator • Channel not connected (open)	• Connect the cable • Disable diagnostics
		Analog input	• Impedance of encoder circuitry is too high • Wire break between the module and sensor • Channel not connected (open)	• Use a different sensor type or wire sensor differently; for example, use lines with larger cross-section • Connect the cable • Disable diagnostics • Connect the encoder contacts
High limit violated	7_H	Analog input	• The analog value is above the overrange. • Short-circuit of input to L+	• Correct the module/ encoder tuning • Check the wiring
Low limit violated	8_H	Analog input	The analog value is below the underrange.	Correct the module/encoder tuning
Parameter assignment error	10_H	Module	• Parameter assignment does not match the terminal block used • Incorrect parameter assignment	• Correct the parameter assignment • Check terminal block[1]
Supply voltage missing	11_H	Module	Missing or insufficient supply voltage L+	• Check wiring of the supply voltage L+ on the terminal block • Check the terminal block type

Diagnostics message	Error code	Assignment	Meaning / Cause	Solution
Hardware interrupt lost	16_H	Module	Error is reported because the events occur faster than they can be processed in the system.	
Channel/component temporarily unavailable	$1F_H$	Module	Update of the firmware is being performed or has been canceled. The module does not conduct any measurements during this time.	• Restart firmware update • Wait for firmware update
Module is faulty	100_H	Module	Internal module error has occurred	Replace module
Short-circuit to L+	105_H	Analog input	Short-circuit of the analog input to sensor supply or L+	Correct process wiring
Short-circuit to M	106_H	Digital output	Short-circuit of the actuator supply to ground The error (both coming and going) is only recognized in the activated state (output value = 1).	Correct process wiring
Short-circuit/overload at external encoder supply	$10E_H$	Analog/digital output	• Short-circuit of the encoder supply to ground • Encoder supply overload	• Correct the module/ encoder tuning • Check the wiring
Switch-off following button operation	122_H	Module	Off button pressed	Pull module
Inconsistent parameter assignment	123_H	Module	Error in redundancy parameters transferred to the module	Check the parameter assignment
Retentive memory in carrier module defective	154_H	Module	Fault detected in the memory block on the carrier module during startup.	Replace carrier module
Retentive memory in the terminal block defective	155_H	Module	Fault detected in the memory block on the terminal block during startup.	Replace terminal block

[1] Only the terminal blocks (TB 45 ...) are suitable for operating I/O modules with IO redundancy.

Maintenance events

A maintenance event is generated for each instance of maintenance required. The MT LED lights up on the module.

Maintenance messages are either assigned to an input on a channel-specific basis (HART error), or assigned to the inputs as module messages affecting all inputs and outputs.

Maintenance messages have no direct effect on the function of the module, of the digital inputs/outputs or of analog value acquisition. Maintenance events of the HART communication do not affect the analog value acquisition of the module.

Table A-2 Maintenance messages, their meaning and possible remedies

Maintenance message	Error code	Assignment	Meaning / Cause	Solution
Redundancy partner has different hardware/firmware version	120_H	Module	The redundantly configured and interconnected I/O modules are not compatible.	• Check and replace modules • Update firmware
IO redundancy warning	121_H	Module	Unable to correctly communicate with the partner module	• Check/replace right-hand module • Check/replace left-hand module • Check/replace terminal block See also the *ET 200SP HA Distributed I/O system* system manual, Chapter "Replacing an I/O module at IO redundancy".
HART communication error	141_H	Analog input	• HART field device is not responding • Timing error • HART field device did not understand the command that was sent (1st status byte) • Running scan because the HART field device is not set to short frame address 0	• Check the process wiring • Correct the parameter assignment • Set current ≥4 mA • Increase number of configured repetitions • When scan is running, wait until the HART field device is found and converted to short frame address 0.

Maintenance message	Error code	Assignment	Meaning / Cause	Solution
HART primary variable outside of limits	142_H	Analog input	• Wrong parameters in HART field device • HART field device is set to "Primary variable outside of limits" in simulation mode • Wrong measuring point • Parameter assignment of primary variable outside of limits	• Check the parameter assignment of the HART device • Correct the simulation • Check whether the correct measuring transducer is connected
HART analog output current of field device saturated	143_H	Analog input	• The output current of the HART field device is saturated: • Wrong parameters in HART field device • HART field device is set to too high a measured value in simulation mode • Wrong measuring point	
HART output current of the field device specified	144_H	Analog input	• The output current of the HART field device is fixed: • Wrong parameters in HART field device • HART field device is set to too high a measured value in simulation mode • Wrong measuring point	
HART additional status information available	145_H	Analog input	In the HART device status (in the 2nd status byte), the HART field device identifier for "further status information available" has been set	Read out status with HART command 48 and clear error/ cause if necessary
HART configuration changed[1]	146_H	Analog input	In the HART device status (in the 2nd status byte), the identifier for "parameter reassignment" of the HART field device has been set	If no diagnostics interrupt is to be triggered by reconfiguration, the HART diagnostics must be disabled.
HART malfunction in field device	147_H	Analog input	In the HART device status (in the 2nd status byte) the field device reports a malfunction	• Read out status with HART command 48 and clear error/cause if necessary • Replace field device
HART secondary variable outside the limits	149_H	Analog input	• Wrong parameters in HART field device • HART field device is set to "Non-primary variable outside limits" in simulation mode • Wrong measuring point • Parameter assignment of non-primary variable is outside the limits	• Check the parameter assignment of the HART device • Correct the simulation • Check whether the correct measuring transducer is connected
Retentive memory in carrier module defective	154_H	Module	Fault detected in the data block on the carrier module during operation	Replace carrier module
Retentive memory in the terminal block defective	155_H	Module	Fault detected in the data block on the terminal block during operation	Replace terminal block

[1] Reaction of the maintenance message "HART configuration changed"

If the HART field device signals "parameter reassignment" (configuration changed) in the 2nd status byte, the module generates the maintenance message "HART configuration changed". If the field device withdraws the message in the 2nd status byte within a minute, the maintenance message is also deleted again by the module. If the message in the 2nd status byte is still set after a minute, the module then independently sends HART command 38 for resetting the message in the field device.

A.6 Hardware interrupts

Hardware interrupts

The I/O module AI-DI 16/DQ16x24VDC HART HA can trigger hardware interrupts for both digital input signal changes and analog input signal limit transitions.

Interrupt OBs are called automatically if an interrupt occurs.

You can find detailed information on the event in the hardware interrupt organization block with the "RALRM" instruction (read additional interrupt information).

Evaluating digital input hardware interrupts

The I/O module generates a hardware interrupt with digital input signals when the following events occur:

- At positive edge (change of signal from 0 to 1)
- At negative edge (change of signal from 1 to 0)

The module digital input (channel) that has triggered the hardware interrupt is entered in variable OB40_POINT_ADDR in the start information of OB40. The figure below shows the assignment to the bits of local data double word 8.

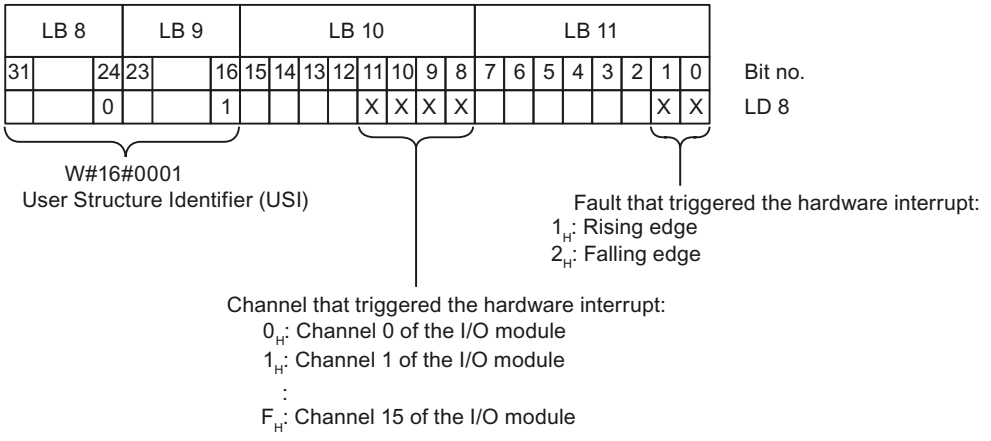

Evaluating analog input hardware interrupts

The module generates a hardware interrupt for analog input signals when the following events occur:

- Violation of the low limit 1
- Violation of the high limit 1
- Violation of the low limit 2
- Violation of the high limit 2

The module analog input (channel) that has triggered the hardware interrupt is entered in variable OB40_POINT_ADDR in the start information of OB40. The figure below shows the assignment to the bits of local data double word 8.

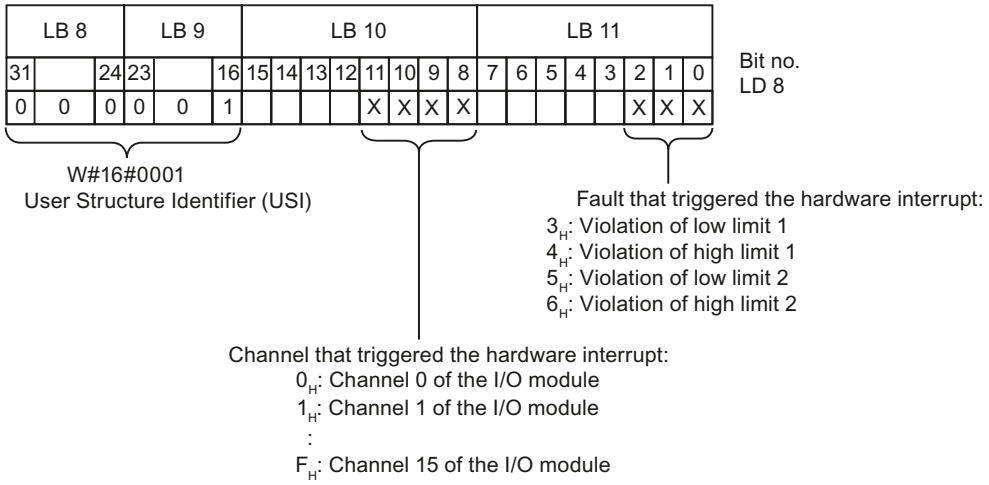
LB 8
LB 9
LB 10
LB 11
31 24 23 16 15 14 13 12 11 10 9 8 7 6 5 4 3 2 1 0
0 0 0 0 0 1 X X X X X X X
Bit no.
LD 8
W#16#0001
User Structure Identifier (USI)
Fault that triggered the hardware interrupt:
3H: Violation of low limit 1
4H: Violation of high limit 1
5H: Violation of low limit 2
6H: Violation of high limit 2
Channel that triggered the hardware interrupt:
0H: Channel 0 of the I/O module
1H: Channel 1 of the I/O module
:
FH: Channel 15 of the I/O module

A.7 Address space in digital mode

Abbreviations

- "IB" stands for input byte, that is, the module start address in the input area
- "QB" stands for output byte, that is the module start address in the output area
- "DI" stands for digital input
- "DQ" stands for digital output
- "QDIn" stands for the value status (QI) of digital input n
- "QDQn" stands for the value status (QI) of digital output n

Digital mode

The tables below show how the address space of module AI-DI 16/DQ16x24VDC HART HA is allocated in digital-only mode.

Input area

IB x +	7	6	5	4	3	2	1	0
0	DI7	DI6	DI5	DI4	DI3	DI2	DI1	DI0
1	DI15	DI14	DI13	DI12	DI11	DI10	DI9	DI8
2	QDI7	QDI6	QDI5	QDI4	QDI3	QDI2	QDI1	QDI0
3	QDI15	QDI14	QDI13	QDI12	QDI11	QDI10	QDI9	QDI8
4	QDQ7	QDQ6	QDQ5	QDQ4	QDO3	QDQ2	QDQ1	QDQ0
5	QDQ15	QDQ14	QDQ13	QDQ12	QDQ11	QDQ10	QDQ9	QDQ8

Output range

QB x +	7	6	5	4	3	2	1	0
0	DQ7	DQ6	DQ5	DQ4	DQ3	DQ2	DQ1	DQ0
1	DQ15	DQ14	DQ13	DQ12	DQ11	DQ10	DQ9	DQ8

A.8 Address space in digital mode with time stamp (accuracy 1 ms)

Abbreviations

- "IB" stands for input byte, that is, the module start address in the input area
- "QB" stands for output byte, that is the module start address in the output area
- "DI" stands for digital input
- "DQ" stands for digital output
- "QDIn" stands for the value status (QI) of digital input n
- "QDQn" stands for the value status (QI) of digital output n

Digital mode with time stamp (accuracy 1 ms)

The following tables show the assignment of the address space of the I/O module in digital mode with time stamping (accuracy 1 ms). Additional data is transmitted in bytes 6 to 23 to form a time stamp with an accuracy of 1 ms.

Input area

EB x +	7	6	5	4	3	2	1	0
0	DI7	DI6	DI5	DI4	DI3	DI2	DI1	DI0
1	DI15	DI14	DI13	DI12	DI11	DI10	DI9	DI8
2	QDI7	QDI6	QDI5	QDI4	QDI3	QDI2	QDI1	QDI0
3	QDI15	QDI14	QDI13	QDI12	QDI11	QDI10	QDI9	QDI8
4	QDQ7	QDQ6	QDQ5	QDQ4	QDO3	QDQ2	QDQ1	QDQ0
5	QDQ15	QDQ14	QDQ13	QDQ12	QDQ11	QDQ10	QDQ9	QDQ8
6 to 23	Time information for time stamping (accuracy 1 ms)							

Output range

QB x +	7	6	5	4	3	2	1	0
0	DQ7	DQ6	DQ5	DQ4	DQ3	DQ2	DQ1	DQ0
1	DQ15	DQ14	DQ13	DQ12	DQ11	DQ10	DQ9	DQ8

A.9 Address space in mixed mode

Abbreviations

- "IB" stands for input byte, that is, the module start address in the input area
- "QB" stands for output byte, that is the module start address in the output area
- "DI" stands for digital input
- "DQ" stands for digital output
- "QDIn" stands for the value status (QI) of digital input n
- "QDQn" stands for the value status (QI) of digital output n
- "QAIn" stands for value status (QI) of analog input n
- "QC"stands for Quality Code

Mixed mode

The following tables show the assignment of the address space of the I/O module in mixed mode.

The addresses for the HART range are not available if no HART variables or no multiHART ranges have been configured in the properties dialog of the I/O module.

Input area

EB x +	7	6	5	4	3	2	1	0
0…1	Analog value, analog input 0							
:								
30…31	Analog value, analog input 15							
32	QAI7	QAI6	QAI5	QAI4	QAI3	QAI2	QAI1	QAI0
33	QAI15	QAI14	QAI13	QAI12	QAI11	QAI10	QAI9	QAI8
34	DI7	DI6	DI5	DI4	DI3	DI2	DI1	DI0
35	DI15	DI14	DI13	DI12	DI11	DI10	DI9	DI8
36	QDI7	QDI6	QDI5	QDI4	QDI3	QDI2	QDI1	QDI0
37	QDI15	QDI14	QDI13	QDI12	QDI11	QDI10	QDI9	QDI8
38	QDQ7	QDQ6	QDQ5	QDQ4	QDO3	QDQ2	QDQ1	QDQ0
39	QDQ15	QDQ14	QDQ13	QDQ12	QDQ11	QDQ10	QDQ9	QDQ8
40	HART range							
: :								

HART range

When HART variables or multiHART ranges are used, they come straight after the QI bits of the HART range digital outputs.
The structure of the HART range depends on the configuration:

With configuration in mixed mode with 8 HART variables in the input area, the area is 40 bytes long and always contains a fixed number of 8 HART variables, each with 4 bytes of value and one byte of quality code (QC).

EB x +	HART range	
40 : 43	Value	Configured HART variable 0
44	QC	
45 : 48	Value	Configured HART variable 1
49	QC	
: : :		
75 : 78	Value	Configured HART variable 7
79	QC	

With configuration in mixed mode with 1 multiHART range in the input/output area, the range is 6 bytes long:

EB x +	HART range		
40	Acknowledgment		multiHART range
41 : 44	Value	HART variable	
45	QC		

With configuration in mixed mode with 4 multiHART ranges in the input/output area, the range is 24 bytes long: There are 4 contingent multiHART ranges.

EB x +	HART range		
40	Acknowledgment		multiHART range 0
41 : 44	Value	HART variable	
45	QC		
: : :			

EB x +	HART range		
58	Acknowledgment		multiHART range 3
59 : 62	Value	HART variable	
63	QC		

Output range

QB x +	7	6	5	4	3	2	1	0
0	DQ7	DQ6	DQ5	DQ4	DQ3	DQ2	DQ1	DQ0
1	DQ15	DQ14	DQ13	DQ12	DQ11	DQ10	DQ9	DQ8
2…	HART range							

The HART range is only available with configuration in mixed mode with 1 multiHART range or 4 multiHART ranges in the input/output area

There is 1 byte of command for each multiHART range.

With configuration in mixed mode with 1 multiHART range in the input/output area:

QB x + 2	Command	multiHART range

With configuration in mixed mode with 4 multiHART ranges in the input/output area:

QB x + 2	Command	multiHART range 0
: :		
QB x + 5	Command	multiHART range 3

Evaluating value status

There is one bit of value status in the address space for each digital output and each digital input.
When the module is configured in mixed mode, there is also one bit of value status for each analog input.

Irrespective of the diagnostics enables, each value status (each QI bit) provides information on the validity of the corresponding process value.

- Value status = 1: Process value okay, "good"
- Value status = 0: Process value not OK, "bad"

Note

The value status is not set to "bad" when there is a wire break on the channel and the wire break test is disabled.

Value status of the digital outputs (QDQx)

The value status is set to "good" when the process value is output. The value status is set to "bad" in the following cases:

- The process value cannot be output as a result of an error
- CPU is in STOP
- Failure of communication between the interface module and CPU
- The digital output is disabled or configured as the sensor supply for the corresponding input

Value status of the digital inputs (QDIx)

The value status is set to "good" when the process value can be acquired without errors. The value status is set to "bad" in the following cases:

- The process value cannot be acquired as a result of an error
- The digital input is disabled
- The input is configured as an analog input

Value status of the analog inputs (QAIx)

Basically, the value status is set to "good" when the analog value can be acquired without error. The value status is set to "bad" in the following cases:

- The analog value cannot be acquired as a result of an error
- The analog input is disabled
- The input is configured as a digital input

Evaluating HART variables

If you assign (map) HART variables using the parameter assignment dialog, 8 HART variables with 5 bytes each are always created in the input address space.

Each HART variable consists of a 4-byte real value and one byte of quality code. The quality code describes the validity of the value; see HART variables (page 29).

The assigned HART variables are automatically updated by the module and can be used as they are in the user program.

Evaluating multiHART ranges

If you select the multiHART ranges with the parameter assignment dialog, 1 or 4 multiHART ranges are created.

A multiHART range occupies 1 byte (command) in the output area and 6 bytes (1 byte acknowledgment + 5 bytes HART variable) in the input area.

You can read all HART variables available in the module over each multiHART range. To do so, request a HART variable from the module using the command byte in the output area.

The command byte identifies the requested HART variable (HART variable reference):

HART variable reference	
Bit 0…3: Variable identifier 1 = Primary 2 = Secondary 3 = Tertiary 4 = Quaternary	Bit 4...7: Channel number 0...15

The command is acknowledged via the acknowledgment byte in the input range. The requested HART variable can be evaluated as soon as the HART variable reference requested with the command can be read in the acknowledgment byte.

If you leave the command byte of the multiHART range unchanged, the module will continuously update the corresponding HART variable.

If an invalid HART variable reference is requested, this is also acknowledged accordingly. In this case, the value of the HART variable is zero and the quality code is output with $0x37_H$ (initialization value of the analog module).

Example:
The primary variable of channel 6 is to be read.

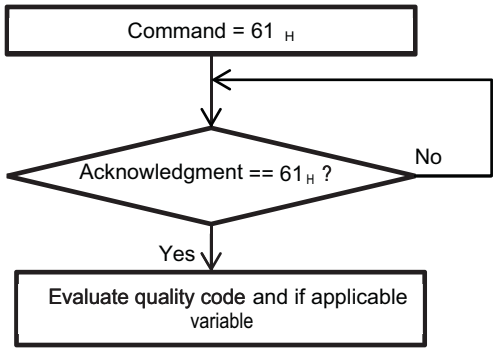

Figure A-7 Command = 0x61

HART operating data records

B

B.1 HART command interface

Data records

The HART commands are sent over data records to the connected field device as "external HART jobs" from the client (e.g. PDM). The response of the field device is made available again in the system via data records.

HART communication may only be used by one client per channel. If a channel is used by multiple clients, the response provided by the AI-DI 16/DQ16x24VDC HART HA cannot be reliably assigned to one specific client. The AI-DI 16/DQ16x24VDC HART HA does not support client management.

Rules

- After having written a request data record, a client must read the response data record before it may write another request data record.
- The client can evaluate the "processing status" in the response data record: If the "processing status" indicates "successful" or "error," the response data record contains current response data or error indications, respectively.
- The response data record must always be read in full as the data record can be changed by the module after it is first read with a successful or error status.
- The client may only write a request data record to the module again when it has read the response to the previously written request data record via the corresponding response data record. Otherwise, the response from the module is overwritten.
- The STATUS component in the response frame (HART device status in the response data) provides information on whether errors have occurred and, if so, which errors.

Each request is stored on a channel-specific basis, and the corresponding request data record is locked. Another writing of the same request data record is thus not possible and is acknowledged with BUSY.
The disable of the request data record is reset after the termination or completion of the requested HART command.

SHC sequence

If a HART command with a set SHC bit is sent to the module, this channel is reserved for HART commands for 2 seconds, i.e. no internal HART command is sent to the field device by the channel.

The module then reserves the channel for HART commands again for another 2 seconds following each further HART command with a set SHC bit. Command 3 or 9 for reading the HART variables starts being sent cyclically to the field device again if a HART command without

a set SHC bit is detected for this channel, or if no further command is received for the channel within 2 seconds of the previous HART command.

Reading/writing data in RUN

HART operating data records are transferred to the module with the instruction "WRREC" and read by the module with the instruction "RDREC".

Errors during the transfer are indicated at output parameter STATUS of the "WRREC" or "RDREC".

The following HART operating data records are available:

Data record number	Description	Length (bytes)	Writable	Readable
80	HART job channel 0	240	Yes	Yes
81	HART response channel 0	240	No	Yes
82	HART job channel 1	240	Yes	Yes
83	HART response channel 1	240	No	Yes
: :				
110	HART job channel 15	240	Yes	Yes
111	HART response channel 15	240	No	Yes
121	HART variables	320	No	Yes
131	HART parameter channel 0	8	Yes	Yes
132	HART parameter channel 1	8	Yes	Yes
: :				
146	HART parameter channel 15	8	Yes	Yes
148	HART directory	17	No	Yes
149	HART feature data	3	No	Yes

B.2 HART job and response data records

HART commands are processed over a separate command interface with one job data record and one response data record each.

Channel	Data record number	
	Request to the field device	Response from the field device
0	80	81
1	82	83
2	84	85
3	86	87
: :		
15	110	111

Structure of job data records 80, 82, 84, 86...110

Byte	Meaning	Comment
0	Request control	
1	Number of preamble bytes	5…20, 255
2…239	Communication data according to HART specification	

Coding "Request control":

Bit 0…1: Reserved = 0
Bit 2: 0 = Parameters are not checked
Bit 3...4: Reserved = 0
Bit 5: 0 = Transparent format [1]
1 = Compact format
Bit 6: 1 = Enable SHC mode
Bit 7: 0 = HART Request

[1] HART commands are processed by the I/O module AI-DI 16/DQ16x24VDC HART HA in both transparent message format and compact message format. However, the response data from the module is always made available in transparent message format.

Note

When "Number of Preamble Bytes" = 255, the number of preambles set with the parameters is used. The default setting is five. You can reconfigure the number of preamble bytes using the HART-specific settings (see section HART-specific settings (Page 92)).

Structure of response data records 81, 83, 85, 87...111

In case of response error

Byte	Meaning	Comment
0	Response control	
1	HART group error display	
2	Protocol error	
3…239	Response data according to HART specification	Only present when "Response result" = 6 = "Error, with data"

In case of response error

Byte	Meaning	Comment
0	Response control	
1	HART group error display	
2…239	Response data according to HART specification	Only present when "Response result" = 4 = "Successful, with data"

Coding "Response control":

Bits 0-2: Response result (processing status)
0 = Inactive
1 = Inactive (reserved)
2 = Waiting
3 = Waiting, executing
4 = Successful, with data
5 = Successful, without data
6 = Error, with data
7 = Error, without data

Bit 3: 0 = Burst mode not active;

Bit 4: 0 = Response data come directly from the HART device

Bit 5: 0 = Response data in transparent message format

Bit 6: 0 = SHC mode not active
1 = SHC mode active

Bit 7: 0 = HART response

Coding "HART group error display"

Bit number	Meaning	Explanation
0	Additional status information available	(2nd HART status byte) You obtain additional status information, if required, with HART command 48.
1	HART communication error	The field device has detected a communication error when receiving the command. The error information is in the first HART status byte
2	Parameter check	0: HMD parameters unchanged 1: Check HMD parameters

Bit number	Meaning	Explanation
3	Reserved	Always 0
4…7	HART protocol error during response	0: Unspecified error 1: HMD error 2: Channel fault 3: Command error 4: Query error 5: Response error 6: Query rejected 7: Profile query rejected 8: Manufacturer-specific query rejected 9 - 15: Not used

Coding "HART protocol error during response"

HART protocol error during response	Meaning	Explanation
0	Unspecified error	Always 0
1	HMD error	0: Not specified 1: Internal communication error 2: Parameter assignment error 3: HW fault 4: Wait time expired 5: HART timer expired 6…127: Reserved 128...255: Manufacturer-specific
2	Channel fault	0: Not specified 1: Line fault 2: Short-circuit 3: Open line 4: Low current output 5: Parameter assignment error 6…127: Reserved 128…255: Manufacturer-specific
3	Command error	0-127: HART protocol, Bit 7 = Always 0
4	Query error	Bit 0 = 0: Reserved Bit 1 = 1: Receive buffer overflow Bit 2 = 0: Reserved Bit 3 = 1: Checksum error Bit 4 = 1: Framing error Bit 5 = 1: Overflow error Bit 6 = 1: Parity error Bit 7 = 1: Reserved

HART protocol error during response	Meaning	Explanation
5	Response error	Bit 0 = 1: GAP timeout Bit 1 = 1: Receive buffer overflow Bit 2 = 1: Timeout Bit 3 = 1: Checksum error Bit 4 = 1: Framing error Bit 5 = 1: Overflow error Bit 6 = 1: Parity error Bit 7 = 1: Reserved
6	Query rejected	0: Unspecified 1: Compact format not supported 2: SHC not supported 3: Impermissible command 4: No resources 5: Channel in standby mode [1] 6…127: Reserved 128...255: Manufacturer-specific
7	Profile query rejected	0: Not specified (not supported)
8	Manufacturer-specific query rejected	0: Not specified (not supported)

[1] An external HART request has been rejected because the channel is not the active channel in a redundancy pair. The job must be sent to the connected field device by the partner module

Example of HART programming (HART command interface)

For HART channel 0, command 01 is to be sent in transparent message format to the HART field device with address "98 CF 38 84 F0".
A positive edge at input 4.0 of a digital input module leads to the writing of the HART command.

The following assumptions are made:

- The module address of the I/O module is 512 (200_H)
- The data record is stored in DB80: starting at address 0.0, length 11 bytes.
- In this example, DB80 (request data record for channel 0) consists of 11 bytes.

```
                                    Explanation
    A I 4.0
    FP M 101.0
    = M 104.0
m2: CALL SFB53, DB53
    REQ :=M104.0                    Write request
    ID :=DW#16#200                  Module address
    INDEX :=80                      Data record number 80
    LEN :=11                        Length 11 bytes
```

```
DONE :=M51.7
BUSY :=M51.0
ERROR :=M51.6
STATUS :=MD92                       Block status or error information
RECORD :=P#DB80.DBX0.0 BYTE 11      Source area in DB80
A M 51.0
SPB m2
BE
```

Table B-1 DB80: Transparent message format

Byte	Initial value (hex)	Comment (Hex)
0	00	Req_Control (00 = Transparent message format. 40 = Transparent message format with SHC sequence)
1	05	Number of preamble bytes (05-14)
2	82	Start character (02 = Short Frame with command 0) (82 = Long Frame with other commands)
3	98	Address (with command 0, the address is exactly 1 byte long and has the value 0.)
4	CF	
5	38	
6	84	
7	F0	
8	01	Command (CMD)
9	00	Length in bytes
10	98	Checksum (CHK) (calculated as EXOR addition starting from byte 2 "Start character" up to the last byte of the command) The checksum must not be sent with the job.)

A HART command can also be sent in the compact message format. In this case, the data transmitted via DB 80 is reduced to 4 bytes.

Table B-2 DB80: Compact message format

Byte	Initial value (hex)	Comment (Hex)
0	20	Req_Control (20 = Compact message format 60 = Compact message format with SHC string)
1	05	Number of preamble bytes (5…20, 255)
2	01	Command (CMD)
3	00	Length in bytes

You can learn when the response from the field device was received by cyclically reading data record DS81 for HART channel 0. The response is always supplied in transparent message format.

Table B-3 FC81: Reading of the response to DB81 with SFB 52

```
                                        Explanation
m3: CALL SFB52, DB52
    REQ :=M1                            Read request
    ID :=DW#16#200                      Module address
    INDEX :=81                          Data record number 81
    MLEN :=200                          Target length
    VALID :=M49.7
    BUSY :=M49.1
    ERROR :=M49.6
    STATUS :=MD100                      Block status or error information
    LEN :=MW104
    RECORD :=P#DB81.DBX0.0 BYTE 200     Target area in DB81
    A M 49.1
    SPB m3
    BE
```

The program part A M 49.1 to SPB m3 is only required if reading is to occur within a block cycle.

As long as the processing status (byte 0 of DB81) is at 3 (waiting, executing), the response has not yet been received from the field device. As soon as the processing status changes to greater than 3, the HART request is finished.

With a processing status of 4, the job has been successfully completed without errors and the response data can be evaluated.

With a processing status of 5, the job has also been completed without errors but there is no response data from the field device.

With a processing status of 6 or 7, the job was canceled with errors. You can find more detailed information in byte 1 of DB81 (see table "HART group fault display") and for a HART protocol error also in byte 2 of DB81 (see table "HART protocol error during response").

B.3 HART directory

Structure of the HART directory

Byte	Meaning	Comment
0	Profile Revision Number	= 2, 0 (Revision 2.0)
1		
2	Index of Client Management	= 255 (not relevant)
3	Number of Clients	= 1
4	Number of Channels	= 16
5	Write Read Index Offset	= 1 (The response to a job data record is made with the data record number of the request data record + 1)
6	Index of HMD Feature Parameter	= 149
7	Index of HMD Module Parameter	= 255 (not relevant)
8	Start Index of Burst Buffer Area	= 255 (not relevant)
9+n	Index of HMD Channel Parameter (Channel n)	= 131+n
9+n+4	Index of HART client channel message data	= 80+(2*n) The HART job data records cannot be configured. The data records from data record number 80 (80, 82, 84, 86, ...) are used.

B.4 HART feature data

Structure of the HART feature data

Byte	Meaning	Comment
0	Byte 0	= 0x62 Bit 1 = 1: "Parameter check result is given with a read response" Bit 5 = 1: "Compact format is supported Bit 6 = 1: "SHC mode is supported"
1	Byte 1	= 0
2	Max Length Data Unit	= 240 (maximum length of the HART request data records)

B.5 HART variable data record

The I/O module AI-DI 16/DQ16x24VDC HART HA supports a maximum of 4 HART variables per channel when HART mode is enabled. Provided they are supported by the connected field device, these variables are ready cyclically.
These 64 HART variables are available to read in HART variable data record 121.

Each HART variable consists of a 4-byte real value and one byte of quality code. See section HART variables (Page 42) under Quality code.

In IO redundancy mode, the HART variables are only updated if the HART interface is on the corresponding module/channel. The channel may not be in standby mode. If the HART interface is on the partner module/partner channel, the corresponding HART variable is initialized (quality code = 0x37).

Structure of the HART variable data record

Byte	Meaning	
Channel 0		
0…3	Value	Primary Variable (PV)
4	Quality code	
5…8	Value	Secondary Variable (SV)
9	Quality code	
10…13	Value	Tertiary Variable (TV)
14	Quality code	
15…18	Value	Quaternary Variable (QV)
19	Quality code	
Channel 1		
20…39	HART variables same as for channel 0	
:		
:		
Channel 15		
300…319	HART variables same as for channel 0	

If HART is not enabled or a given HART variable is not supplied by the connected field device, variable = 0 and QC = 0x37 (initialization value of the I/O module) is set.

B.6 HART-specific settings

HART communication is available through the standard parameter assignment (see 9.1 "Parameter assignment and structure of the channel/technology parameters").

You can specify additional HART-specific settings on a channel-specific basis using data records 131…146.

The parameters assigned with STEP 7 are not changed permanently in the CPU, which means the parameters assigned with STEP 7 are valid again after a restart.

Every new parameter assignment of the I/O module resets the HART-specific settings back to the initial values from parameter data set 128.

The module does not apply the HART-specific settings if there is missing supply voltage L+.

If you make changes in IO redundancy mode using the HART-specific settings, these changes only apply to the addressed module or the addressed channel. No synchronization is performed for the partner channel.

Channel	Data record number
0	131
1	132
2	133
3	134
: :	
15	146

Structure of the HART-specific settings

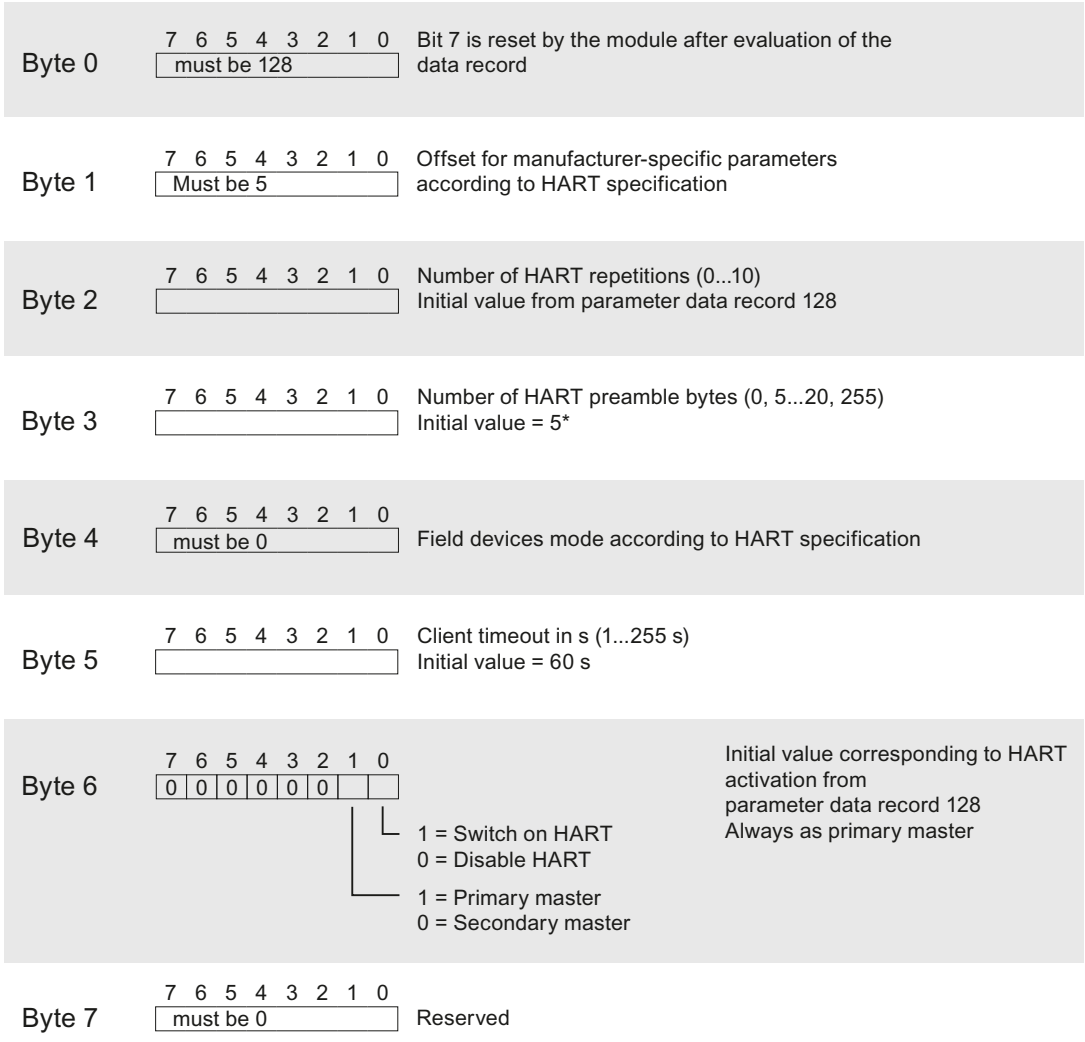

Figure B-1 Settings

* When the number of HART preamble bytes = 0, the number of preamble bytes requested by the connected field device are used (at least 5).
When the number of HART preamble bytes = 255, 20 preamble bytes are used for operation.

Analog value display

C

C.1 Representation of analog values in the current measuring ranges

Display/measuring range

The following tables list the decimal and hexadecimal values (codes) of the possible current measuring ranges.

Table C-1 Current measuring range 0 to 10 mA

Values		Current measuring range	Range
Dec.	Hex.	0 to 10 mA	
32767	7FFF	>11.76 mA	Overflow
32511	7EFF	11.76 mA	Overrange
27649	6C01		
27648	6C00	10 mA	Nominal range
20736	5100	7.5 mA	
1	1	361.69 nA	
0	0	0 mA	

Table C-2 Current measuring range 0 to 20 mA

Values		Current measuring range	Range
Dec.	Hex.	0 to 20 mA	
32767	7FFF	>23.52 mA	Overflow
32511	7EFF	23.52 mA	Overrange
27649	6C01		
27648	6C00	20 mA	Nominal range
20736	5100	15 mA	
1	1	723.4 nA	
0	0	0 mA	

Table C-3 Current measuring ranges 4 to 20 mA and 4 to 20 mA with HART

Values		Current measuring range	Range
Dec.	Hex.	4 to 20 mA	
32767	7FFF	>22.81 mA	Overflow
32511	7EFF	22.81 mA	Overrange
27649	6C01		

Values		Current measuring range	Range
27648	6C00	20 mA	Nominal range
20736	5100	16 mA	
1	1	4 mA + 578.7 nA	
0	0	4 mA	
-1	FFFF		Underrange
-4864	ED00	1.185 mA	
-32768	8000	< 1.185 mA	Underflow

Index

A

Address assignment, 42
AI-DI 16/DQ16x24VDC HART HA
  Accessories, 9
  Channel parameters, 18
  Commissioning, 41
  Configuration, 41
  Configurations, 7
  Functions, 9
  Module parameters, 18
  Parameters, 17, 18
  Pin assignment, 12
  Properties, 8
  Schematic circuit diagram, 15
  Technical specifications, 45

B

Burst mode, 39

C

Channel fault LED, 31
Channel parameters, 18, 57
Channel status LED, 31
Command interface, 81, 83
Commissioning, 41
Communication, 92
Configuration, 41
  HART variable, 42
Conventions, 6

D

Data record 128, 57
  Header information, 59
Data record 130, 64
  Header information, 64
  Parameters, 64
Data records, 81
Device status, 39
DIAG LED, 32
Diagnostics interrupt, 33
Documentation
  Range of validity, 5

E

Error management, 41

F

Fast mode, 39
Feature data, 90
Field devices
  Parameter reassignment, 41

H

HART
  Command, 83
  Command interface, 81, 86
  Commands, 37
  Communication, 36, 92
  Definition, 35
  Device status, 39
  Directory, 89
  Error management, 41
  Evaluating variables, 78
  Fast mode, 39
  Feature data, 90
  Mapping parameters, 30
  Operating data records, 82
  Operating principle, 36
  Parameter assignment tool, 40
  Programming, 86
  Protocol, 35, 38
  Settings, 93
  Signal, 36
  System environment, 40
  Variable data record, 91
  Variables, 42
HART variables
  Configuring, 42

L

LED displays, 31

M

Mapping parameters, 30, 64

Module parameters, 18
MT LED, 32

O

Operating data records, 82
Output disable switch, 9

P

Parameter reassignment, 41
Parameters, 17, 18
Pin assignment, 12
PWR LED, 32

Q

Quality code, 43
    Revision 5, 43
    Revision 7, 44

R

Request data record, 83
Response data record, 84
Reverse polarity, 15

S

Schematic circuit diagram, 15
SHC sequence, 81
SIMATIC PDM configuration tool, 40
Supply voltage, 15
System environment, 40

T

Technology parameters, 57
Terminal block, 11

V

Value status
    Evaluating, 77
Variable data record, 91