SIEMENS

Data sheet US2:LCE01C008120A

Electrically held lighting contactor, (convertible to mech. held), Amp rating 30A (tungsten 20A), 0 N.C. / 8 N.O. poles, 115-120V 60Hz/110V 50Hz coil, Non-combination type, Enclosure NEMA type 1, Indoor general purpose use



product brand name	Class LC
design of the product	Electrically held lighting contactor (convertible to mechanically held)
special product feature	Electrically held convertible to mechanically held; Power poles convertible between NO and NC
General technical data	
weight [lb]	11 lb(av)
Height x Width x Depth [in]	14 × 8 × 7 in
touch protection against electrical shock	NA for enclosed products
installation altitude [ft] at height above sea level maximum	6560 ft
ambient temperature [°F]	
● during storage	-22 ... +149 °F
● during operation	-13 ... +104 °F
ambient temperature	
● during storage	-30 ... +65 °C
● during operation	-25 ... +40 °C
country of origin	USA
Contactor	
size of contactor	30 Amp
number of NO contacts for main contacts	8
number of NC contacts for main contacts	0
operating voltage for main current circuit at AC at 60 Hz maximum	600 V
Type of main contacts	Silver alloy, double break
mechanical service life (operating cycles) of the main contacts typical	100000
contact rating of the main contacts of lighting contactor	
● with electronic ballast [LED driver] (1 pole per 1 phase) rated value	10A @120V / 3A @277V 1p 1ph
● at tungsten (1 pole per 1 phase) rated value	20A @277V 1p 1ph
● at tungsten (2 poles per 1 phase) rated value	20A @480V 2p 1ph
● at tungsten (3 poles per 3 phases) rated value	20A @480V 3p 3ph
● at ballast (1 pole per 1 phase) rated value	30A @347V 1p 1ph
● at ballast (2 poles per 1 phase) rated value	30A @600V 2p 1ph
● at ballast (3 poles per 3 phases) rated value	30A @600V 3p 3ph
● at resistive load (1 pole per 1 phase) rated value	30A @600V 1p 1ph
● at resistive load (2 poles per 1 phase) rated value	30A @600V 2p 1ph
● at resistive load (3 poles per 3 phases) rated value	30A @600V 3p 3ph
Auxiliary contact	
number of NC contacts for auxiliary contacts	0
number of NO contacts for auxiliary contacts	0
number of total auxiliary contacts maximum	4

Subject to change without notice
© Copyright Siemens

contact rating of auxiliary contacts of contactor according to UL	NA
Coil	
type of voltage of the control supply voltage	AC
control supply voltage	
● at AC at 50 Hz rated value	110 V
● at AC at 60 Hz rated value	115 ... 120 V
apparent pick-up power of magnet coil at AC	248 VA
apparent holding power of magnet coil at AC	28 VA
operating range factor control supply voltage rated value of magnet coil	0.85 ... 1.1
Enclosure	
degree of protection NEMA rating of the enclosure	NEMA Type 1
design of the housing	indoors, usable on a general basis
Mounting/wiring	
mounting position	Vertical
fastening method	Surface mounting and installation
type of electrical connection for supply voltage line-side	Screw-type terminals
tightening torque [lbf·in] for supply	35 ... 35 lbf·in
type of connectable conductor cross-sections at line-side for AWG cables single or multi-stranded	2x (14 ... 8 AWG)
temperature of the conductor for supply maximum permissible	75 °C
material of the conductor for supply	CU
type of electrical connection for load-side outgoing feeder	Screw-type terminals
tightening torque [lbf·in] for load-side outgoing feeder	35 ... 35 lbf·in
type of connectable conductor cross-sections for AWG cables for load-side outgoing feeder single or multi-stranded	2x (14 ... 8 AWG)
temperature of the conductor for load-side outgoing feeder maximum permissible	75 °C
material of the conductor for load-side outgoing feeder	CU
type of electrical connection of magnet coil	Screw-type terminals
tightening torque [lbf·in] at magnet coil	15 ... 15 lbf·in
type of connectable conductor cross-sections of magnet coil for AWG cables single or multi-stranded	2x (18 ... 14 AWG)
temperature of the conductor at magnet coil maximum permissible	75 °C
material of the conductor at magnet coil	CU
Short-circuit current rating	
design of the fuse link for short-circuit protection of the main circuit required	100kA@600V (Class R or J 40A max)
design of the short-circuit trip	Thermal magnetic circuit breaker
maximum short-circuit current breaking capacity (Icu)	
● at 240 V	24 kA
● at 480 V	65 kA
● at 600 V	25 kA
certificate of suitability	NEMA ICS 2; UL 508
Approvals Certificates	
Test Certificates	

UL

Further information

Industrial Controls - Product Overview (Catalogs, Brochures,…)
www.usa.siemens.com/iccatalog
Industry Mall (Online ordering system)
https://mall.industry.siemens.com/mall/en/us/Catalog/product?mlfb=US2:LCE01C008120A
Service&Support (Manuals, Certificates, Characteristics, FAQs,...)
https://support.industry.siemens.com/cs/US/en/ps/US2:LCE01C008120A
Image database (product images, 2D dimension drawings, 3D models, device circuit diagrams, EPLAN macros, ...)
http://www.automation.siemens.com/bilddb/cax_de.aspx?mlfb=US2:LCE01C008120A&lang=en
Certificates/approvals
https://support.industry.siemens.com/cs/US/en/ps/US2:LCE01C008120A/certificate

© Copyright Siemens

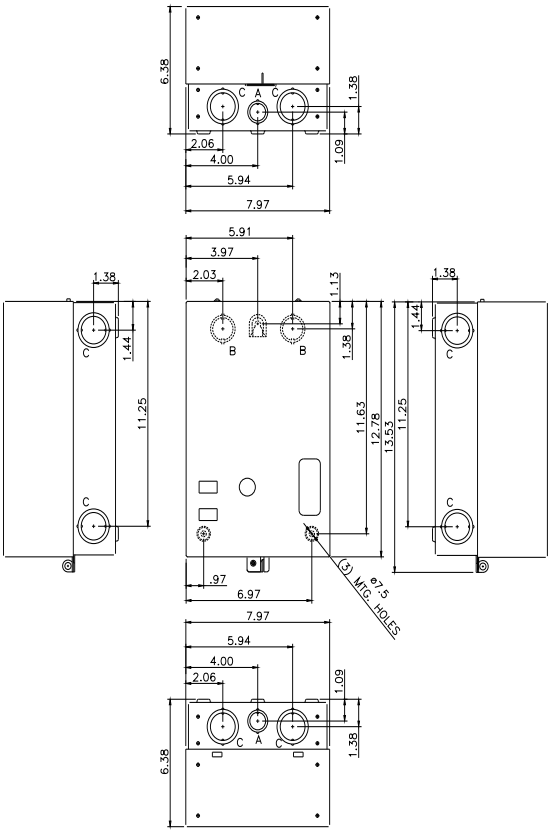

LETTER	KNOCKOUT & CONDUIT SIZE
A	ø22.2 X ø28.6 FOR 12.7 & 19 CONDUIT
B	ø28.6 X ø34.9 FOR 19 & 25.4 CONDUIT
C	ø34.9 X ø43.6 FOR 25.4 & 31.8 CONDUIT

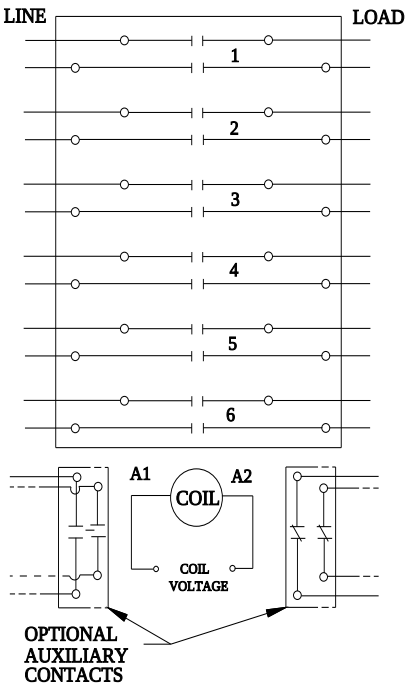

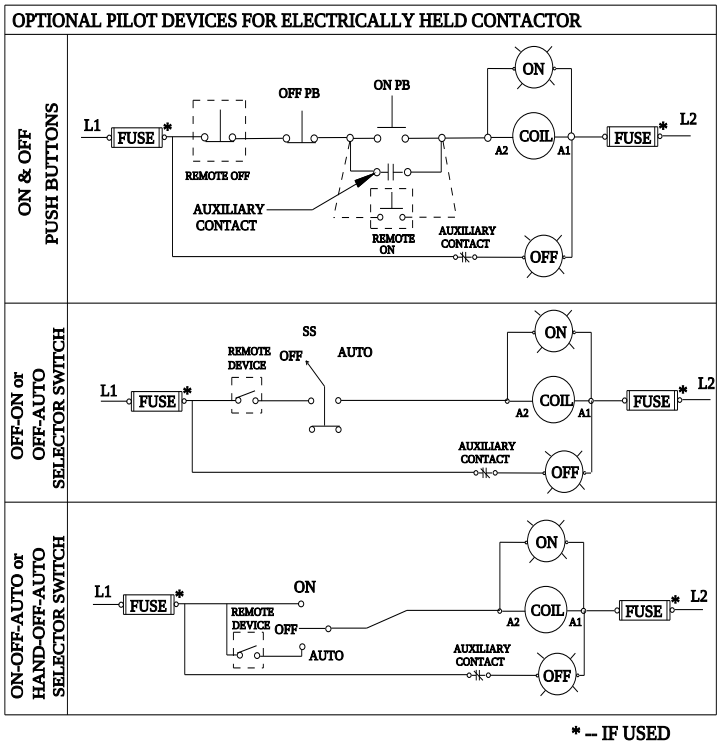

* -- IF USED

D38297001

last modified: 4/5/2023

Subject to change without notice
© Copyright Siemens

Subject to change without notice
© Copyright Siemens