SIEMENS

Data sheet 3VA6710-6KQ31-0AA0



circuit breaker 3VA6 UL frame 1200 breaking capacity class H 65kA @ 480 V 3-pole, line protection ETU860, LSIG, In=1000A overload protection Ir=400A - 1000A short circuit protection Isd=0,6-10x In, Ii=1,5-12x In w/o connection

Model	
product brand name	SENTRON
product designation	Molded-case circuit breaker
product designation / according to UL file	HNAE
design of the product	System protection
design of the load switch / according to UL 489 / Heating, Air Conditioning, and Refrigeration circuit breaker (HACR Type)	Yes
design of the overcurrent release	ETU860
protection function of the overcurrent release	LSIG
number of poles	3
General technical data	
insulation voltage / rated value	800 V
operating voltage / at AC / rated value	600 V
power loss [W] / maximum	169 W
power loss [W] / for rated value of the current / at AC / in hot operating state / per pole	169 W
mechanical service life (operating cycles) / typical	3 000
electrical endurance (operating cycles) / at AC-1 / at 380/415 V	1 500
electrical endurance (operating cycles) / at AC-1 / at 690 V	500
electrical endurance (operating cycles) / at 480 V	1 500
electrical endurance (operating cycles) / at 600 V	500
product feature / for neutral conductors / upgradable/retrofittable / short-circuit and overload proof	Yes
ground-fault monitoring version	Summation current formation L + N-conductor
product function	
● communication function	Yes
● other measurement function	Yes
Net Weight	23.9 kg
Current	
marking / according to UL 489 / 100%-rated breaker	No
operational current	
● at 40 °C	1 000 A
● at 45 °C	1 000 A
● at 50 °C	1 000 A
● at 55 °C	1 000 A
● at 60 °C	1 000 A
● at 65 °C	1 000 A
● at 70 °C	1 000 A
Switching capacity according to IEC 60947	
switching capacity class of the circuit breaker	H
maximum short-circuit current breaking capacity (Icu)	

Subject to change without notice
© Copyright Siemens

● at 240 V	110 kA
● at 415 V	70 kA
● at 690 V	30 kA
operating short-circuit current breaking capacity (Ics)	
● at 240 V	55 kA
● at 415 V	35 kA
● at 690 V	15 kA
short-circuit current making capacity (Icm)	
● at 240 V	242 kA
● at 415 V	154 kA
● at 690 V	63 kA
Switching capacity according to UL 489	
current breaking capacity	
● at 240 V	100 kA
● at 480 V	65 kA
● at 600 V	35 kA
Adjustable parameters	
adjustable response value setting current (Ir) / of the L-trip / with I2t characteristic	
● minimum	400 A
● maximum	1 000 A
adjustable response value delay time (tr) / for L-tripping / with I2t characteristic	
● minimum	2.5 s
● maximum	30 s
adjustable response value setting current (Isd) / of S-trip / with I0t characteristic	
● minimum	600 A
● maximum	10 000 A
adjustable response value setting current (Isd) / of S-trip / with I2t characteristic	
● minimum	600 A
● maximum	10 000 A
adjustable response value delay time (tsd) / for S-tripping / with I0t characteristic	
● minimum	0.05 s
● maximum	0.5 s
adjustable response value delay time (tsd) / for S-tripping / with I2t characteristic	
● minimum	0.05 s
● maximum	0.5 s
adjustable response value setting current (Ii) / for I-tripping	
● minimum	1 500 A
● maximum	12 000 A
adjustable current response value current / for G-tripping / with standard characteristic	
● initial value	200 A
● full-scale value	1 000 A
adjustable response value delay time (tg) / for G-tripping / with I0t characteristic	
● minimum	0.05 s
● maximum	0.8 s
adjustable response value setting current (Ig) / for G-tripping / with I2t characteristic	
● minimum	200 A
● maximum	1 000 A
adjustable response value delay time (tg) / for G-tripping / with I2t characteristic	
● minimum	0.05 s
● maximum	0.8 s
design of the N-conductor protection	adjustable OFF; 20% to 160%
product function / grounding protection	Yes
Mechanical Design	
product component	

Subject to change without notice
© Copyright Siemens

● undervoltage release	No
● trip indicator	No
height [in]	8.14 in
height	206.9 mm
width [in]	8.99 in
width	228.4 mm
depth [in]	16 in
depth	406.4 mm
Connections	
type of electrical connection / for main current circuit	without terminals
design of the surface / of the connections / on the top of the switch (N, 1, 3, 5)	silver
design of the surface / of the connections / on the bottom of the switch (N, 2, 4, 6)	silver
Auxiliary circuit	
number of CO contacts / for auxiliary contacts	0
Environmental conditions	
protection class IP / on the front	IP40
ambient temperature	
● during operation / minimum	-25 °C
● during operation / maximum	70 °C
● during storage / minimum	-40 °C
● during storage / maximum	80 °C
reference code / according to IEC 81346-2	F

Approvals / Certificates

General Product Approval

Confirmation

General Product Approval			EMV	Test Certificates	Marine / Shipping
	Miscellaneous			Type Test Certific-ates/Test Report	

other			Dangerous goods	Environment
Miscellaneous	Confirmation	Miscellaneous	Transport Information	Environmental Con-firmations

Further information

Information on the packaging
https://support.industry.siemens.com/cs/ww/en/view/109813875
Information- and Downloadcenter (Catalogs, Brochures,…)
http://www.siemens.com/lowvoltage/catalogs
Industry Mall (Online ordering system)
https://mall.industry.siemens.com/mall/en/en/Catalog/product?mlfb=3VA6710-6KQ31-0AA0
Service&Support (Manuals, Certificates, Characteristics, FAQs,...)
https://support.industry.siemens.com/cs/ww/en/ps/3VA6710-6KQ31-0AA0
Image database (product images, 2D dimension drawings, 3D models, device circuit diagrams, ...)
http://www.automation.siemens.com/bilddb/cax_en.aspx?mlfb=3VA6710-6KQ31-0AA0
CAx-Online-Generator
http://www.siemens.com/cax
Tender specifications
http://www.siemens.com/specifications

Subject to change without notice
© Copyright Siemens

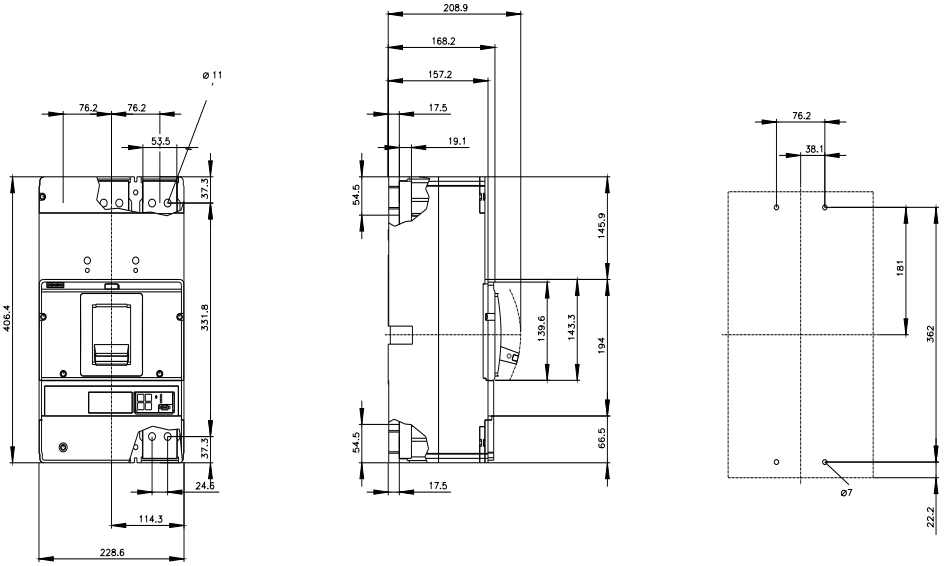

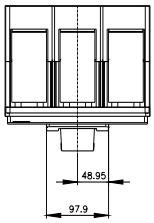

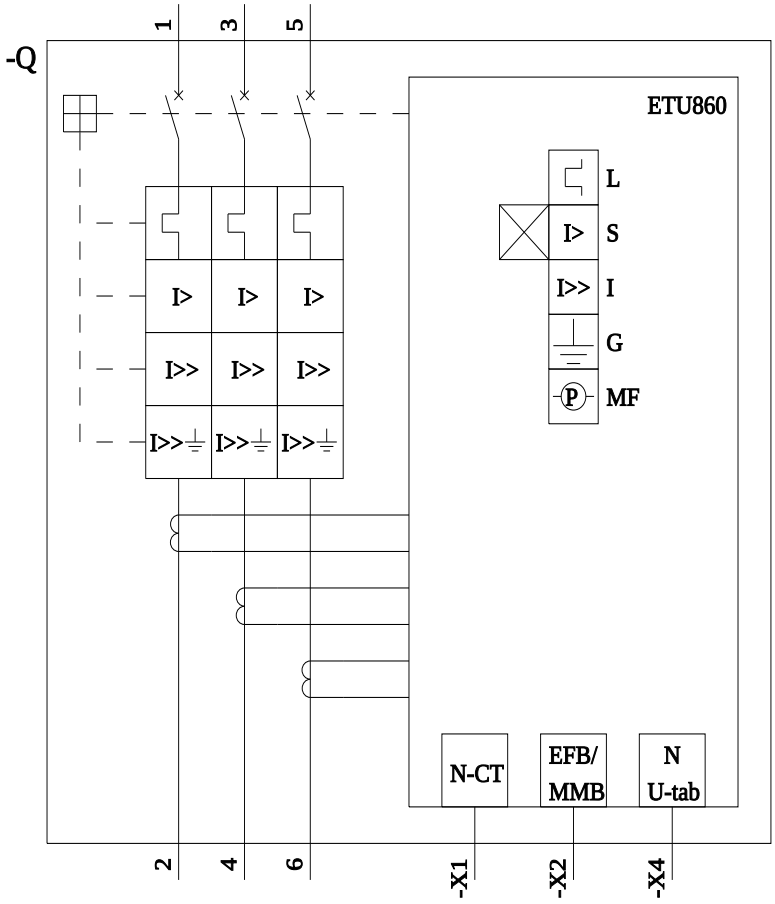

Subject to change without notice
© Copyright Siemens

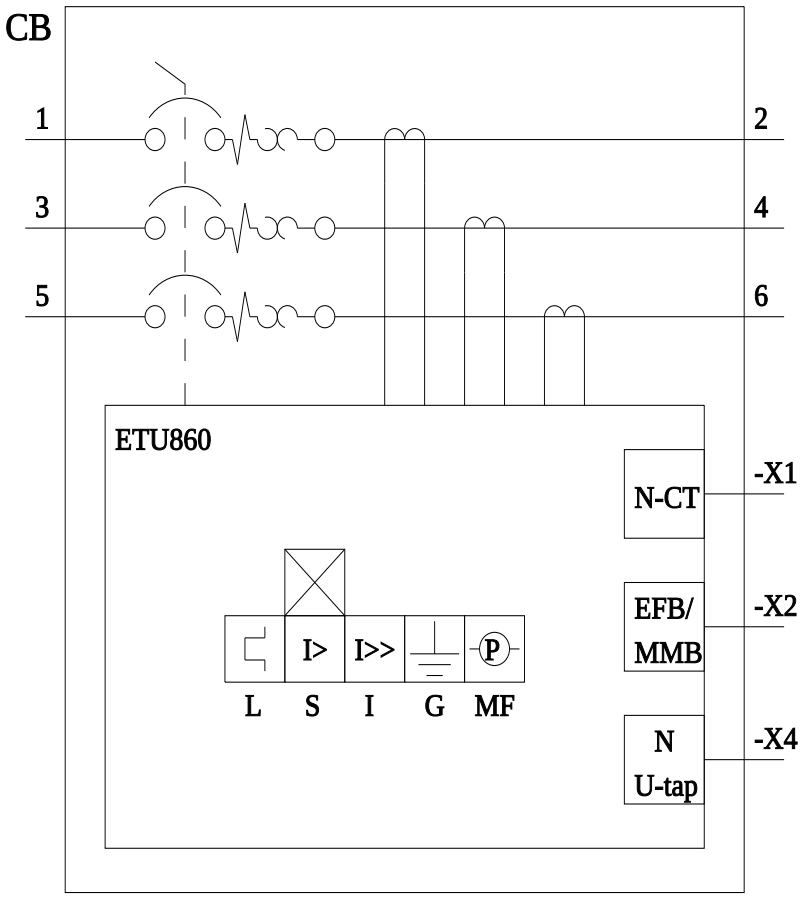

last modified: 3/11/2024

Subject to change without notice
© Copyright Siemens

Subject to change without notice
© Copyright Siemens