

Siemens

- Low Voltage Power Distribution
- Industrial Controls
- Drive Technology
- Automation Systems

NATIONAL DISTRIBUTORS OF

SIEMENS

apsindustrial.com.au

SIEMENS

Obtaining Product Information through the Siemens Industry Mall

The Siemens Industry Mall is your gateway to the convenient world of automation and drive technology. Here you will find comprehensive online information and services relating to more than 135,000 products and systems with more than 30 million variants.

Whether you are buying contactors, programmable logic controllers, software or motors – with just a few clicks you can easily use any of the following options via the innovative user interface:

- Detailed information with product data, diagrams, certificates and dimension drawings
- Simple system configuration
- Quick access to suitable training offers and services

Note:
To get the best from the Industry Mall your browser should be at least Microsoft Internet Explorer 7 or Mozilla Firefox 4. We recommend that you always use the latest version of the above browsers.

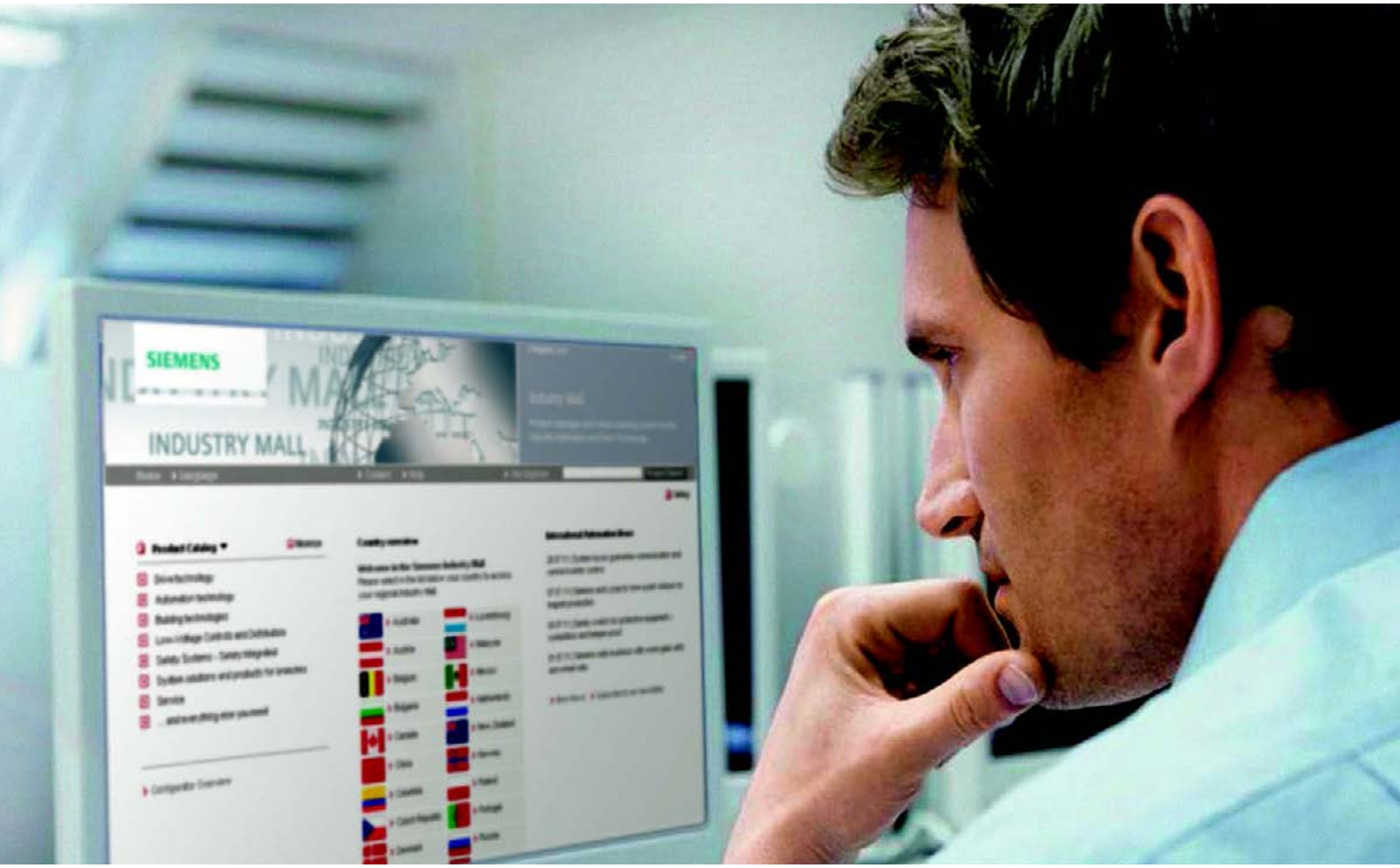

There are 2 ways to search for your product in the Siemens Industry Mall

1. Type your product description or part number into the "Product Search" box and click the "Product Search" button.

2. Navigate to your product via the product catalogue section. There are various headings to choose from e.g.

- Drive Technology
- Automation Technology
- Low Voltage Controls and Distribution

Scan QR code or visit https://mall.industry.siemens.com/goos/ to access the Siemens Industry Mall.

SIEMENS

CONTENTS

Low Voltage Power Distribution 1

- MINIATURE CIRCUIT BREAKERS - 5SL C CURVE 1/5
- MINIATURE CIRCUIT BREAKERS - 5SY C CURVE 1/6
- MINIATURE CIRCUIT BREAKERS - 5SY D CURVE 1/7
- MCB & PANEL BOARD ACCESSORIES 1/8
- RCBOS & RCDS 1/9
- DISTRIBUTION BOARD - APS DB ESSENTIAL 1/10
- DISTRIBUTION BOARD - APS DB ULTIMATE 1/11
- MCB CHASSIS & ISOLATING CHASSIS 1/12
- MOULDED CASE CIRCUIT BREAKERS TM 3VA1 SINGLE POLE 1/13
- MOULDED CASE CIRCUIT BREAKERS TM 3VA1 2 POLE 1/14
- MOULDED CASE CIRCUIT BREAKERS TM 3VA1 3 POLE 25 & 36KA 1/15
- MOULDED CASE CIRCUIT BREAKERS TM 3VA1 3 POLE 55 & 70KA 1/16
- 3VA1 MCCB ACCESSORIES 1/17-18
- MOULDED CASE CIRCUIT BREAKERS 3VA2 3 POLE ETU LI 1/19
- MOULDED CASE CIRCUIT BREAKERS 3VA2 3 POLE ETU LSI 1/20
- MOULDED CASE CIRCUIT BREAKERS 3VA2 3 POLE ETU LIG 1/21
- MCCB ACCESSORIES - 3VA2 1/22-23
- MCCB ENCAPSULATED CHASSIS 630A - 800A 1/24-25
- MOULDED CASE CIRCUIT BREAKERS 3VA2 3 POLE ETU LSI COMMUNICATIONS CAPABLE 1/26
- MOULDED CASE CIRCUIT BREAKERS 3VA2 3 POLE ETU LSI COMMUNICATIONS CAPABLE WITH INBUILT METERING 1/27
- MCCB COMMUNICATION ACCESSORIES 3VA2 1/28
- 3VA INTERNAL ACCESSORIES 1/29-33
- 3VA CIRCUIT BREAKER CLEARANCES 1/34
- 3VA 5SY BACK UP CHART 1/35
- 3VA SELECTIVITY CHART 1/35
- POWER METERS 1/36-37
- DISCONNECTION SWITCHES 63-1600A (3KD) 1/38
- 3KD ACCESSORIES 1/38
- PANEL MOUNT AND ENCLOSED ISOLATING SWITCHES 16 TO 630A 1/39
- AUTOMATIC TRANSFER CONTROL DEVICES 1/40
- BASIC TRANSFER SWITCHES, 3VA MCCBS 1/41
- MANUAL TRANSFER SWITCHES 32-1600A (3KC) 1/42
- REMOTE/AUTOMATIC TRANSFER SWITCHES 40-3200A 1/43
- ACCESSORIES FOR AUTOMATIC TRANSFER SWITCHES - 3KC 1/44
- AIR CIRCUIT BREAKERS - 3WL 1/45
- FUSE SWITCHES SURFACE MOUNT 32-800A (3KF) 1/46
- ACCESSORIES - 3KF 1/47
- FUSE HOLDERS AND FUSES 1/48

Industrial Controls 2

- CONTACTORS UP TO 450KW 2/50
- CONTACTOR ACCESSORIES - 3RT2 2/51
- SAFETY CONTACTORS UP TO 250KW 2/52
- MOTOR CIRCUIT BREAKERS - 3RV20 THERMAL MAGNETIC 2/53
- MOTOR CIRCUIT BREAKERS - 3RV23 MAGNETIC ONLY 2/54
- MOTOR CIRCUIT BREAKERS WITH INCREASED SWITCHING CAPACITY - 3RV 2/55
- MOTOR CIRCUIT BREAKERS ACCESSORIES 2/56
- THERMAL OVERLOAD RELAYS (3RU2) TO SUIT 3RT2 CONTACTORS CLASS 10 2/57
- THERMAL OVERLOAD RELAYS (3RU2) TO SUIT 3RT2 CONTACTORS & ACCESSORIES 2/58
- ELECTRONIC OVERLOAD RELAYS (3RB) & ACCESSORIES CLASS 10 2/59
- MOTOR STARTER INFEED SYSTEM - 3RV29 2/60-61
- 60 MM BUSBAR SYSTEMS 8US 2/62
- 60MM BUSBAR ADAPTORS FOR MOTOR STARTERS 2/63
- 60MM MOUNTING ADAPTORS FOR 3VL AND 3VA MCCBS 2/63
- SIMOCODE - INTELLIGENT MOTOR MANAGEMENT RELAY 2/64-66
- 3RM1 COMPACT SOLID STATE MOTOR STARTERS 2/67
- TYPE 2 COORDINATION, CLASS 10, 150KA MSP & CONTACTOR 2/68
- RELAYS 2/69
- SAFETY RELAYS - 3SK1 2/70
- TIMING RELAYS - 3RP25 2/71
- MONITORING RELAYS - VOLTAGE, CURRENT & GROUND FAULT 2/72
- PUSH BUTTONS AND LAMPS - PLASTIC (3SU) IP69K 2/73
- PUSH BUTTONS AND LAMPS - METAL (3SU) IP69K 2/74
- PUSH BUTTONS 30MM METAL (3SU) 30MM CUTOUT IP69K 2/75
- 4 POSITION SWITCHES, KEY SWITCHES, ACOUSTIC DEVICES & POTENTIOMETERS (3SU) 2/76
- PUSH BUTTON ACCESSORIES (3SU) 2/77
- PUSH BUTTON ENCLOSURES (3SU) 2/78
- PROFINET ENABLED PUSH BUTTONS 2/79
- APS PUSH BUTTON CODES TO SIEMENS PART NUMBERS 2/80

Drive Technology 3

- SOFT STARTERS - SIRIUS 3RW 3/82
- 3RW30, 40 AND 50 SOFT STARTERS TWO PHASE CONTROL 3/83
- 3RW52 SOFT STARTERS 3/84
- 3RW55 SOFT STARTERS 3/85
- 3RW5 ACCESSORIES 3/86
- SINAMICS V20 SERIES COMPACT VARIABLE SPEED DRIVES 3/87
- G120X VARIABLE SPEED DRIVES 3/88

Automation Systems 4

- LOGO! 8 LOGIC MODULE 4/90
- S7-1200 BASIC CONTROLLERS 4/91
- S7-1200 BASIC CONTROLLERS I/O 4/92
- S7-1200 COMMUNICATION MODULES & HMI 4/93
- S7-1200 BASIC CONTROLLER ACCESSORIES 4/94
- POWER SUPPLIES 4/95
- ACCESSORIES 4/95



SIEMENS

MINIATURE CIRCUIT BREAKERS - 5SL C CURVE

Suitable for use in load centres



RATED CURRENT	PART NUMBER	PART NUMBER
SINGLE POLE, 6KA		SINGLE POLE, 10KA
1A	5SL6101-7CC	5SL4101-7CC
2A	5SL6102-7CC	5SL4102-7CC
4A	5SL6104-7CC	5SL4104-7CC
6A	5SL6106-7CC	5SL4106-7CC
10A	5SL6110-7CC	5SL4110-7CC
16A	5SL6116-7CC	5SL4116-7CC
20A	5SL6120-7CC	5SL4120-7CC
25A	5SL6125-7CC	5SL4125-7CC
32A	5SL6132-7CC	5SL4132-7CC
40A	5SL6140-7CC	5SL4140-7CC
50A	5SL6150-7CC	5SL4150-7CC
63A	5SL6163-7CC	5SL4163-7CC



DOUBLE POLE, 6KA		DOUBLE POLE, 10KA
1A	5SL6201-7CC	5SL4201-7CC
2A	5SL6202-7CC	5SL4202-7CC
4A	5SL6204-7CC	5SL4204-7CC
6A	5SL6206-7CC	5SL4206-7CC
10A	5SL6210-7CC	5SL4210-7CC
16A	5SL6216-7CC	5SL4216-7CC
20A	5SL6220-7CC	5SL4220-7CC
25A	5SL6225-7CC	5SL4225-7CC
32A	5SL6232-7CC	5SL4232-7CC
40A	5SL6240-7CC	5SL4240-7CC
50A	5SL6250-7CC	5SL4250-7CC
63A	5SL6263-7CC	5SL4263-7CC



TRIPLE POLE, 6KA		TRIPLE POLE, 10KA
1A	5SL6301-7CC	5SL4301-7CC
2A	5SL6302-7CC	5SL4302-7CC
4A	5SL6304-7CC	5SL4304-7CC
6A	5SL6306-7CC	5SL4306-7CC
10A	5SL6310-7CC	5SL4310-7CC
16A	5SL6316-7CC	5SL4316-7CC
20A	5SL6320-7CC	5SL4320-7CC
25A	5SL6325-7CC	5SL4325-7CC
32A	5SL6332-7CC	5SL4332-7CC
40A	5SL6340-7CC	5SL4340-7CC
50A	5SL6350-7CC	5SL4350-7CC
63A	5SL6363-7CC	5SL4363-7CC

MINIATURE CIRCUIT BREAKERS - 5SY C CURVE

Suitable for use on chassis



RATED CURRENT	PART NUMBER	PART NUMBER
	SINGLE POLE, 6KA	SINGLE POLE, 10KA
1A	5SY6101-7CC	5SY4101-7CC
2A	5SY6102-7CC	5SY4102-7CC
4A	5SY6104-7CC	5SY4104-7CC
6A	5SY6106-7CC	5SY4106-7CC
10A	5SY6110-7CC	5SY4110-7CC
16A	5SY6116-7CC	5SY4116-7CC
20A	5SY6120-7CC	5SY4120-7CC
25A	5SY6125-7CC	5SY4125-7CC
32A	5SY6132-7CC	5SY4132-7CC
40A	5SY6140-7CC	5SY4140-7CC
50A	5SY6150-7CC	5SY4150-7CC
63A	5SY6163-7CC	5SY4163-7CC

RATED CURRENT	27MM PITCH
80A	5SP4180-7
100A	5SP4191-7
125A	5SP4192-7



	DOUBLE POLE, 6KA	DOUBLE POLE, 10KA
1A	5SY6201-7CC	5SY4201-7CC
2A	5SY6202-7CC	5SY4202-7CC
4A	5SY6204-7CC	5SY4204-7CC
6A	5SY6206-7CC	5SY4206-7CC
10A	5SY6210-7CC	5SY4210-7CC
16A	5SY6216-7CC	5SY4216-7CC
20A	5SY6220-7CC	5SY4220-7CC
25A	5SY6225-7CC	5SY4225-7CC
32A	5SY6232-7CC	5SY4232-7CC
40A	5SY6240-7CC	5SY4240-7CC
50A	5SY6250-7CC	5SY4250-7CC
63A	5SY6263-7CC	5SY4263-7CC



	TRIPLE POLE, 6KA	TRIPLE POLE, 10KA
1A	5SY6301-7CC	5SY4301-7CC
2A	5SY6302-7CC	5SY4302-7CC
4A	5SY6304-7CC	5SY4304-7CC
6A	5SY6306-7CC	5SY4306-7CC
10A	5SY6310-7CC	5SY4310-7CC
16A	5SY6316-7CC	5SY4316-7CC
20A	5SY6320-7CC	5SY4320-7CC
25A	5SY6325-7CC	5SY4325-7CC
32A	5SY6332-7CC	5SY4332-7CC
40A	5SY6340-7CC	5SY4340-7CC
50A	5SY6350-7CC	5SY4350-7CC
63A	5SY6363-7CC	5SY4363-7CC
80A	-	5SY4380-7CC



RATED CURRENT	27MM PITCH
80A	5SP4380-7
100A	5SP4391-7
125A	5SP4392-7

MINIATURE CIRCUIT BREAKERS - 5SY D CURVE

Suitable for use on chassis



RATED CURRENT	PART NUMBER
SINGLE POLE, 10KA	
4A	5SY4104-8CC
6A	5SY4106-8CC
10A	5SY4110-8CC
16A	5SY4116-8CC
20A	5SY4120-8CC
25A	5SY4125-8CC
32A	5SY4132-8CC
40A	5SY4140-8CC
50A	5SY4150-8CC
63A	5SY4163-8CC



TRIPLE POLE, 10KA	
4A	5SY4304-8CC
6A	5SY4306-8CC
10A	5SY4310-8CC
16A	5SY4316-8CC
20A	5SY4320-8CC
25A	5SY4325-8CC
32A	5SY4332-8CC
40A	5SY4340-8CC
50A	5SY4350-8CC
63A	5SY4363-8CC

MCB & PANEL BOARD ACCESSORIES

PART NUMBER	DESCRIPTION

Auxiliary contacts (for 5SL, 5SY & 5SV)



5ST3010	1N/O +1 N/C
5ST3011	2N/O
5ST3012	2N/C
5ST3020	1N/O +1 N/C Fault Signal Contact

Shunt trip (for 5SY & 5SL4 only)



5ST3030	110-415V AC
5ST3031	24-60V AC/DC

Undervoltage trip (for 5SY & 5SL4 only)

5ST3043	230V AC
5ST3041	110V DC
5ST3042	24V DC

Bus Combs - 16mm²

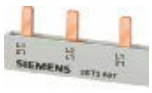





5ST3700	1 Phase, 12 Poles, Insulated 50A, 18mm Pitch
5ST3708	3 Phase, 12 Poles, Insulated 65A, 18mm Pitch
5ST3701	1 Phase, 57 Poles, Insulated 80A, 18mm Pitch, Can be cut to length
5ST3710	3 Phase, (19x3) Poles, Insulated 80A, 18mm Pitch, Can be cut to length
5ST3748	1 Phase end cap to suit 5ST3701
5ST3750	3 Phase end cap to suit 5ST3710
5ST3655	Bare connection cover for 5ST Busbar

Handle lock device



5ST3806	5SU9, 5TL, 5SV, 5SL & 5SY Handle locking device

DIN contactors



5TT5800-0	20A 2 Pole N/O DIN Contactor, 230VAC Coil
5TT5802-0	20A 2 Pole N/C DIN Contactor, 230VAC Coil
5TT5840-0	40A 4 Pole N/O DIN Contactor, 230VAC Coil
5TT5843-0	40A 4 Pole N/C DIN Contactor, 230VAC Coil

Emergency lighting test kit



DBEMLTK25	25A Test/Reset, Timer & 4 NC Contactor
DBEMLTK40	40A Test/Reset, Timer & 4 NC Contactor

Isolators



5TL1163-1	1 N/O, 63A, Red Handle
5TL1191-1	1 N/O, 100A, Red Handle
5TL1363-1	3 N/O, 63A, Red Handle
5TL1391-1	3 N/O, 100A, Red Handle

RCBOS & RCDS

RATED CURRENT	PART NUMBER	DESCRIPTION

Single Pole RCBO, 10KA Type A 30mA (long body suitable for Standard Chassis Mount with 5SY MCB)



6A	5SU9304-7KK06	RCBO, Single Phase, 1 Pole, 10kA, 600mm Tail
10A	5SU9304-7KK10	RCBO, Single Phase, 1 Pole, 10kA, 600mm Tail
16A	5SU9304-7KK16	RCBO, Single Phase, 1 Pole, 10kA, 600mm Tail
20A	5SU9304-7KK20	RCBO, Single Phase, 1 Pole, 10kA, 600mm Tail
25A	5SU9304-7KK25	RCBO, Single Phase, 1 Pole, 10kA, 600mm Tail
32A	5SU9304-7KK32	RCBO, Single Phase, 1 Pole, 10kA, 600mm Tail
40A	5SU9304-7KK40	RCBO, Single Phase, 1 Pole, 10kA, 600mm Tail

Single Pole RCBO, 6KA Type A 30mA (compact suitable for load center with switch neutral)



6A	5SV9316-7PK06	RCBO, Single Phase, 1 Pole, 6kA, 300mm Tail
10A	5SV9316-7PK10	RCBO, Single Phase, 1 Pole, 6kA, 300mm Tail
16A	5SV9316-7PK16	RCBO, Single Phase, 1 Pole, 6kA, 300mm Tail
20A	5SV9316-7PK20	RCBO, Single Phase, 1 Pole, 6kA, 300mm Tail
32A	5SV9316-7PK32	RCBO, Single Phase, 1 Pole, 6kA, 300mm Tail

Single Pole RCBO, 6KA Type A 30mA (compact suitable for load center with switch neutral)



6A	5SV9316-7NK06	RCBO, Single Phase, 1 Pole, 6kA
10A	5SV9316-7NK10	RCBO, Single Phase, 1 Pole, 6kA
16A	5SV9316-7NK16	RCBO, Single Phase, 1 Pole, 6kA
20A	5SV9316-7NK20	RCBO, Single Phase, 1 Pole, 6kA
25A	5SV9316-7NK25	RCBO, Single Phase, 1 Pole, 6kA
32A	5SV9316-7NK32	RCBO, Single Phase, 1 Pole, 6kA

Single Phase RCBO, 10kA Type A (2 modules wide DIN Rail Mount)



6A	5SU9354-7KK06	RCBO, Single Phase, 2 Pole
10A	5SU9354-7KK10	RCBO, Single Phase, 2 Pole
16A	5SU9354-7KK16	RCBO, Single Phase, 2 Pole
20A	5SU9354-7KK20	RCBO, Single Phase, 2 Pole
25A	5SU9354-7KK25	RCBO, Single Phase, 2 Pole
32A	5SU9354-7KK32	RCBO, Single Phase, 2 Pole
40A	5SU9354-7KK40	RCBO, Single Phase, 2 Pole

Note: These can not have auxiliaries mounted.

RCD Type A 30mA (DIN Rail Mount)



25A	5SV33126	Type A 25A 1+N-Pole 30MA 230V 2MW
40A	5SV33146	Type A 40A 1+N-Pole 30MA 230V 2MW
63A	5SV33166	Type A 63A 1+N-Pole 30MA 230V 2MW
40A	5SV33446	Type A 40A 3+N-Pole 30MA 400V 4MW
80A	5SV33476	Type A 80A 3+N-Pole 30MA 400V 4MW

3 Phase RCD for use in combination with 5SY MCBS



40A	5SM2332-6	3 Pole, Type A, 30mA, 3MW (total of 6MW with MCB)
63A	5SM2335-6	3 Pole, Type A, 30mA, 3MW (total of 6MW with MCB)

Note: Will not fit on chassis.

DISTRIBUTION BOARD - APS DB ESSENTIAL

High quality light-weight distribution board for high end commercial and medium duty industrial environments.



- IP55 Protection Rating
- Available in RAL 7035 Grey and Electrical Orange
- 1.2mm Mild Steel
- Encapsulated or Isolating MCB Chassis
- 18-72 Pole
- CAD Blocks Available
- Industry standard quarter turn locks
- Reversible White Escutcheon and Hinged Door
- Isolating Main Switch or MCCB Option
- In-feed Earth and Neutral Bars

MAIN SWITCH	MCB POLE CAPACITY	ENCLOSURE WIDTH AND DEPTH	ENCLOSURE HEIGHT	PART NUMBER
KATKO 250A Isolating Main Switch (Encapsulated Chassis)	18	600mm x 210mm	800mm	ESS18MG250EKT
	24			ESS24MG250EKT
	30			ESS30MG250EKT
	36		1000mm	ESS36MG250EKT
	42			ESS42MG250EKT
	48			ESS48MG250EKT
	60		1200mm	ESS60MG250EKT
	72			ESS72MG250EKT

Part Number Configuration Guide

The below table has been prepared as your guide to configuring the right part number for your individual enclosure requirements. As an example, we have used the part number: ESS18MG250EKT

There are 3 inputs that you are able to substitute:
1. Replace “MG” with “MO” for Electrical Orange
2. Replace “E” with “I” for Isolating Chassis
3. Replace “K” with “CB” for MCCB Main Switch

ESS	18	MG	250	E	K	T
TYPE	NUMBER OF POLES	COLOUR	MAIN SWITCH A	CHASSIS TYPE	SWITCH TYPE	CHASSIS FEED
ESS - Essential	18 - 18 Poles	MG - RAL 7035 Grey	250 - 250 A	E - Encapsulated	K - KATKO	T - Top
	24 - 24 Poles	MO - Electric Orange	400 - 400 A	I - Isolating	CB - Siemens MCCB	B - Bottom
	30 - 30 Poles					U - Universal
	36 - 36 Poles					
	42 - 42 Poles					
	48 - 48 Poles					
	60 - 60 Poles					
	72 - 72 Poles					

DISTRIBUTION BOARD - APS DB ULTIMATE

The true industrial distribution board that will perform in arduous and heavy-duty environments..



- IP66 Protection Rating
- Available in RAL 7035 Grey and Electrical Orange
- 1.5mm Mild Steel
- Encapsulated or Isolating MCB Chassis
- 18-96 Pole
- CAD Blocks Available
- Semi Flush Rittal Swing Handle
- 3 Point Locking With Rod
- Reversible White Escutcheon and Hinged Door
- Isolating Main Switch or MCCB Option
- In-feed Earth and Neutral Bars

MAIN SWITCH	MCB POLE CAPACITY	ENCLOSURE WIDTH AND DEPTH	ENCLOSURE HEIGHT	PART NUMBER
KATKO 250A Isolating Main Switch (Encapsulated Chassis)	18	600mm x 250mm	800mm	ULT18MG250EKT
	24			ULT24MG250EKT
	30			ULT30MG250EKT
	36		1000mm	ULT36MG250EKT
	42			ULT42MG250EKT
	48			ULT48MG250EKT
	60		1200mm	ULT60MG250EKT
	72			ULT72MG250EKT
	84		1500mm	ULT84MG250EKT
	96			ULT96MG250EKT

Part Number Configuration Guide

The below table has been prepared as your guide to configuring the right part number for your individual enclosure requirements. As an example, we have used the part number: ULT18MG250EKT

There are 3 inputs that you are able to substitute:
1. Replace “MG” with “MO” for Electrical Orange
2. Replace “E” with “I” for Isolating Chassis
3. Replace “K” with “CB” for MCCB Main Switch

ESS	18	MG	250	E	K	T
TYPE	NUMBER OF POLES	COLOUR	MAIN SWITCH A	CHASSIS TYPE	SWITCH TYPE	CHASSIS FEED
ULT - Ultimate	18 - 18 Poles	MG - RAL 7035 Grey	250 - 250 A	E - Encapsulated	K - KATKO	T - Top
	24 - 24 Poles	MO - Electric Orange	400 - 400 A	I - Isolating	CB - Siemens MCCB	B - Bottom
	30 - 30 Poles					U - Universal
	36 - 36 Poles					
	42 - 42 Poles					
	48 - 48 Poles					
	60 - 60 Poles					
	72 - 72 Poles					
	84 - 84 Poles					
	96 - 96 Poles					

MCB CHASSIS & ISOLATING CHASSIS

POLES	PART NUMBER	PART NUMBER
	TOP FEED	UNIVERSAL FEED

Encapsulated chassis - 250A MCB chassis (rated at 25kA for 0.1sec & 10kA for 1sec)



12	ENCY25012T	ENCY25012U
18	ENCY25018T	ENCY25018U
24	ENCY25024T	ENCY25024U
30	ENCY25030T	ENCY25030U
36	ENCY25036T	ENCY25036U
42	ENCY25042T	ENCY25042U
48	ENCY25048T	ENCY25048U
60	ENCY25060T	ENCY25060U
72	ENCY25072T	ENCY25072U
84	ENCY25084T	ENCY25084U
96	ENCY25096T	ENCY25096U

Note: 400 Amp Chassis available on request.
Note: Top feed and bottom feed are the same price
Note: Hybrid chassis available, combination 18 and 27mm pitch

POLES	PART NUMBER	DESCRIPTION

Isolating chassis - 250A MCB chassis (rated at 30kA for 0.1sec)



12	ISCY25012U	MCB Isolating Chassis 250A 12 Pole Dual Feed
18	ISCY25018U	MCB Isolating Chassis 250A 18 Pole Dual Feed
24	ISCY25024U	MCB Isolating Chassis 250A 24 Pole Dual Feed
30	ISCY25030U	MCB Isolating Chassis 250A 30 Pole Dual Feed
36	ISCY25036U	MCB Isolating Chassis 250A 36 Pole Dual Feed
42	ISCY25042U	MCB Isolating Chassis 250A 42 Pole Dual Feed
48	ISCY25048U	MCB Isolating Chassis 250A 48 Pole Dual Feed
60	ISCY25060U	MCB Isolating Chassis 250A 60 Pole Dual Feed
72	ISCY25072U	MCB Isolating Chassis 250A 72 Pole Dual Feed
84	ISCY25084U	MCB Isolating Chassis 250A 84 Pole Dual Feed
96	ISCY25096U	MCB Isolating Chassis 250A 96 Pole Dual Feed

Suitable for use with 5SY MCBS

DIMENSIONAL DETAILS					
PART NUMBER	NO. OF POLES	DIMENSION			
		A	B	C	D
ENCY25018T	18	251	202	142	160
ENCY25024T	24	305	256	196	214
ENCY25030T	30	359	310	250	268
ENCY25036T	36	413	364	304	322
ENCY25042T	42	467	418	358	376
ENCY25048T	48	521	472	412	430
ENCY25060T	60	629	580	520	538
ENCY25072T	72	737	688	628	646
ENCY25084T	84	845	796	736	754
ENCY25096T	96	953	904	844	862

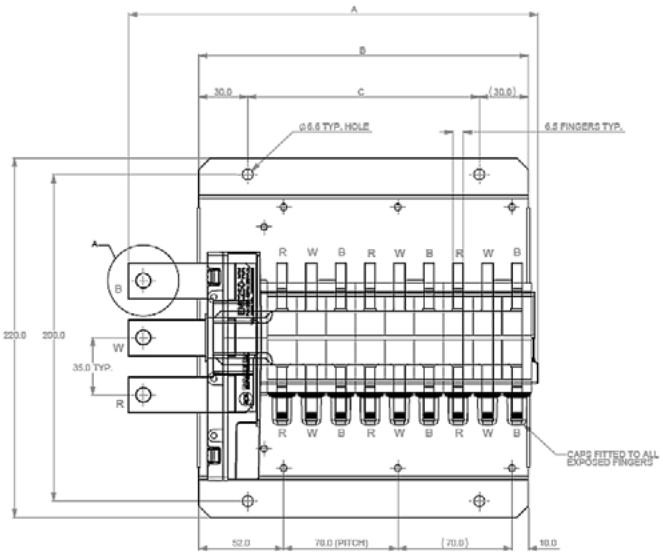

MOULDED CASE CIRCUIT BREAKERS TM 3VA1 SINGLE POLE



3VA1 MCCBs - TM120 fixed thermal & magnetic

1P, 16A - 160A

Standard Thermal Magnetic Trip unit (TM120)

	In (A) RATED	Ir (A) SETTING	Ii (A) SETTING	PART NUMBER
25kA at 240V Line protection TM120	16A	16A	302A	3VA1196-3ED12-0AA0
	20A	20A	320A	3VA1120-3ED12-0AA0
	25A	25A	320A	3VA1125-3ED12-0AA0
	32A	32A	320A	3VA1112-3ED12-0AA0
	40A	40A	400A	3VA1140-3ED12-0AA0
	50A	50A	500A	3VA1150-3ED12-0AA0
	63A	63A	630A	3VA1163-3ED12-0AA0
	80A	80A	800A	3VA1180-3ED12-0AA0
	100A	100A	1000A	3VA1110-3ED12-0AA0
	125A	125A	1250A	3VA1112-3ED12-0AA0
	160A	160A	1600A	3VA1116-3ED12-0AA0
36kA at 240V Line protection TM120	16A	16A	302A	3VA1196-4ED12-0AA0
	20A	20A	320A	3VA1120-4ED12-0AA0
	25A	25A	320A	3VA1125-4ED12-0AA0
	32A	32A	320A	3VA1112-4ED12-0AA0
	40A	40A	400A	3VA1140-4ED12-0AA0
	50A	50A	500A	3VA1150-4ED12-0AA0
	63A	63A	630A	3VA1163-4ED12-0AA0
	80A	80A	800A	3VA1180-4ED12-0AA0
	100A	100A	1000A	3VA1110-4ED12-0AA0
	125A	125A	1250A	3VA1112-4ED12-0AA0
	160A	160A	1600A	3VA1116-4ED12-0AA0
55kA at 240V Line protection TM120	16A	16A	302A	3VA1196-5ED12-0AA0
	20A	20A	320A	3VA1120-5ED12-0AA0
	25A	25A	320A	3VA1125-5ED12-0AA0
	32A	32A	320A	3VA1132-5ED12-0AA0
	40A	40A	400A	3VA1140-5ED12-0AA0
	50A	50A	500A	3VA1150-5ED12-0AA0
	63A	63A	630A	3VA1163-5ED12-0AA0
	80A	80A	800A	3VA1180-5ED12-0AA0
	100A	100A	1000A	3VA1110-5ED12-0AA0
	125A	125A	1250A	3VA1112-5ED12-0AA0
	160A	160A	1600A	3VA1116-5ED12-0AA0

A = 25.4mm
B = 130mm
C = 70mm
D = 88mm

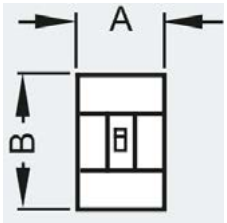

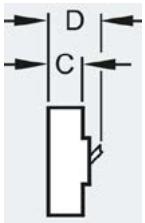

MOULDED CASE CIRCUIT BREAKERS TM 3VA1 2 POLE

3VA1 MCCBs - TM120 fixed thermal & magnetic

2P, 16A - 160A

Standard Thermal Magnetic Trip unit (TM120)



	In (A) RATED	Ir (A) SETTING	Ii (A) SETTING	PART NUMBER
25kA at 240V Line protection TM120	16A	16A	302A	3VA1196-3ED22-0AA0
	20A	20A	320A	3VA1120-3ED22-0AA0
	25A	25A	320A	3VA1125-3ED22-0AA0
	32A	32A	320A	3VA1132-3ED22-0AA0
	40A	40A	400A	3VA1140-3ED22-0AA0
	50A	50A	500A	3VA1150-3ED22-0AA0
	63A	63A	630A	3VA1163-3ED22-0AA0
	80A	80A	800A	3VA1180-3ED22-0AA0
	100A	100A	1000A	3VA1110-3ED22-0AA0
	125A	125A	1250A	3VA1112-3ED22-0AA0
	160A	160A	1600A	3VA1116-3ED22-0AA0
36kA at 240V Line protection TM120	16A	16A	302A	3VA1196-4ED22-0AA0
	20A	20A	320A	3VA1120-4ED22-0AA0
	25A	25A	320A	3VA1125-4ED22-0AA0
	32A	32A	320A	3VA1132-4ED22-0AA0
	40A	40A	400A	3VA1140-4ED22-0AA0
	50A	50A	500A	3VA1150-4ED22-0AA0
	63A	63A	630A	3VA1163-4ED22-0AA0
	80A	80A	800A	3VA1180-4ED22-0AA0
	100A	100A	1000A	3VA1110-4ED22-0AA0
	125A	125A	1250A	3VA1112-4ED22-0AA0
	160A	160A	1600A	3VA1116-4ED22-0AA0
55kA at 240V Line protection TM120	16A	16A	302A	3VA1196-5ED22-0AA0
	20A	20A	320A	3VA1120-5ED22-0AA0
	25A	25A	320A	3VA1125-5ED22-0AA0
	32A	32A	320A	3VA1132-5ED22-0AA0
	40A	40A	400A	3VA1140-5ED22-0AA0
	50A	50A	500A	3VA1150-5ED22-0AA0
	63A	63A	630A	3VA1163-5ED22-0AA0
	80A	80A	800A	3VA1180-5ED22-0AA0
	100A	100A	1000A	3VA1110-5ED22-0AA0
	125A	125A	1250A	3VA1112-5ED22-0AA0
	160A	160A	1600A	3VA1116-5ED22-0AA0

A = 50.8mm
B = 130mm
C = 70mm
D = 88mm

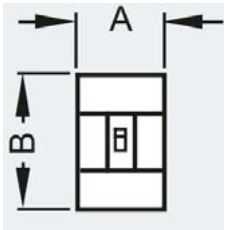

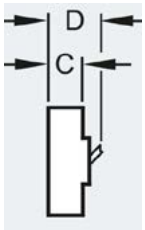

MOULDED CASE CIRCUIT BREAKERS TM 3VA1 3 POLE 25 & 36KA

3VA1 MCCBs - TM240 (25kA at 415V)

3 Pole, 16A - 160A

Line protection - Standard thermal-magnetic trip unit (TM240 - ATAM)*



3VA11 MCCBs (FS 1)

FRAME SIZE (FS)	In (A) RATED	Ir (A) SETTING	Ii (A) SETTING	PART NUMBER
25kA at 415V Line protection TM240	1	16A	11 - 16A	160-320A	3VA1196-3EF32-0AA0
		20A	14 - 20A	160-320A	3VA1120-3EF32-0AA0
		25A	18 - 25A	160-320A	3VA1125-3EF32-0AA0
		32A	22 - 32A	160-320A	3VA1132-3EF32-0AA0
		40A	28 - 40A	200-400A	3VA1140-3EF32-0AA0
		50A	35 - 50A	250-500A	3VA1150-3EF32-0AA0
		63A	44 - 63A	315-630A	3VA1163-3EF32-0AA0
		80A	56 - 80A	400-800A	3VA1180-3EF32-0AA0
		100A	70 - 100A	500-1000A	3VA1110-3EF32-0AA0
		125A	88 - 125A	625-1250A	3VA1112-3EF32-0AA0
		160A	112 - 160A	800-1600A	3VA1116-3EF32-0AA0

3VA1 MCCBs - TM240 (36kA at 415V)

3 Pole, 16A - 630A

Line protection - Standard thermal-magnetic trip unit (TM240 - ATAM)*



3VA12 MCCBs (FS 2)



3VA13/3VA14 MCCBs (FS 3)

36kA at 415V Line protection TM240	1	16A	11 - 16A	160-320A	3VA1196-4EF32-0AA0
		20A	14 - 20A	160-320A	3VA1120-4EF32-0AA0
		25A	18 - 25A	160-320A	3VA1125-4EF32-0AA0
		32A	22 - 32A	160-320A	3VA1132-4EF32-0AA0
		40A	28 - 40A	200-400A	3VA1140-4EF32-0AA0
		50A	35 - 50A	250-500A	3VA1150-4EF32-0AA0
		63A	44 - 63A	315-630A	3VA1163-4EF32-0AA0
		80A	56 - 80A	400-800A	3VA1180-4EF32-0AA0
		100A	70 - 100A	500-1000A	3VA1110-4EF32-0AA0
		125A	88 - 125A	625-1250A	3VA1112-4EF32-0AA0
		160A	112 - 160A	800-1600A	3VA1116-4EF32-0AA0
	2	160A	112 - 160A	800-1600A	3VA1216-4EF32-0AA0
		200A	140 - 200A	1000-2000A	3VA1220-4EF32-0AA0
		250A	175 - 250A	1250-2500A	3VA1225-4EF32-0AA0
	3	320A	220 - 320A	1600-3200A	3VA1332-4EF32-0AA0
		400A	280 - 400A	2000-4000A	3VA1340-4EF32-0AA0
		500A	350 - 500A	2500-5000A	3VA1450-4EF32-0AA0
		630A	440 - 630A	2520-5040A	3VA1463-4EF32-0AA0

3VA1 MCCBs Dimensions					
Frame size (FS)	A (3P)	A (4P)	B	C	D
1	76.2	101.6	130	70	88
2	105	140	158	70	91
3	138	184	248	110	173

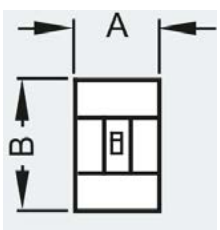

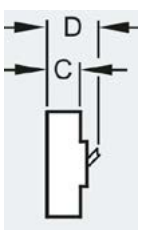

Note: All dimensions are in mm.

* TM240 (Line Protection) = Adjustable Thermal (Ir), Adjustable Magnetic (Ii) - ATAM (LI)

MOULDED CASE CIRCUIT BREAKERS TM 3VA1 3 POLE 55 & 70KA



3VA11 MCCBs
(FS 1)



3VA12 MCCBs
(FS 2)



3VA13 MCCBs
(FS 3)

3VA1 MCCBs - TM240 (55kA at 415V)

3 Pole, 16A - 1000A

Line protection - Standard thermal-magnetic trip unit (TM240)

	FRAME SIZE (FS)	In (A) RATED	Ir (A) SETTING	Ii (A) SETTING	PART NUMBER
55kA at 415V Line protection TM240	1	16A	11 - 16A	160-320A	3VA1196-5EF32-0AA0
		20A	14 - 20A	160-320A	3VA1120-5EF32-0AA0
		25A	18 - 25A	160-320A	3VA1125-5EF32-0AA0
		32A	22 - 32A	160-320A	3VA1132-5EF32-0AA0
		40A	28 - 40A	200-400A	3VA1140-5EF32-0AA0
		50A	35 - 50A	250-500A	3VA1150-5EF32-0AA0
		63A	44 - 63A	315-630A	3VA1163-5EF32-0AA0
		80A	56 - 80A	400-800A	3VA1180-5EF32-0AA0
		100A	70 - 100A	500-1000A	3VA1110-5EF32-0AA0
		125A	88 - 125A	625-1250A	3VA1112-5EF32-0AA0
		160A	112 - 160A	800-1600A	3VA1116-5EF32-0AA0
	2	160A	112 - 160A	800-1600A	3VA1216-5EF32-0AA0
		200A	140 - 200A	1000-2000A	3VA1220-5EF32-0AA0
		250A	175 - 250A	1250-2500A	3VA1225-5EF32-0AA0
	3	320A	220 - 320A	1600-3200A	3VA1332-5EF32-0AA0
		400A	280 - 400A	2000-4000A	3VA1340-5EF32-0AA0
		500A	350 - 500A	2500-5000A	3VA1450-5EF32-0AA0
		630A	440 - 630A	2520-5040A	3VA1463-5EF32-0AA0
	4	800A	560-800A	5 to 10A x In	3VA1580-5EF32-0AA0
		1000A	700-1000A	5 to 10A x In	3VA1510-5EF32-0AA0

3VA1 MCCBs - TM240 (70kA at 415V)

3 Pole, 16A - 1000A

Line protection - Standard thermal-magnetic trip unit (TM240)

	FRAME SIZE (FS)	In (A) RATED	Ir (A) SETTING	Ii (A) SETTING	PART NUMBER
70kA at 415V Line protection TM240	1	16A	11 - 16A	160-320A	3VA1196-6EF32-0AA0
		20A	14 - 20A	160-320A	3VA1120-6EF32-0AA0
		25A	18 - 25A	160-320A	3VA1125-6EF32-0AA0
		32A	22 - 32A	160-320A	3VA1132-6EF32-0AA0
		40A	28 - 40A	200-400A	3VA1140-6EF32-0AA0
		50A	35 - 50A	250-500A	3VA1150-6EF32-0AA0
		63A	44 - 63A	315-630A	3VA1163-6EF32-0AA0
		80A	56 - 80A	400-800A	3VA1180-6EF32-0AA0
		100A	70 - 100A	500-1000A	3VA1110-6EF32-0AA0
		125A	88 - 125A	625-1250A	3VA1112-6EF32-0AA0
		160A	112 - 160A	800-1600A	3VA1116-6EF32-0AA0
	2	160A	112 - 160A	800-1600A	3VA1216-6EF32-0AA0
		200A	140 - 200A	1000-2000A	3VA1220-6EF32-0AA0
		250A	175 - 250A	1250-2500A	3VA1225-6EF32-0AA0
	3	320A	220 - 320A	1600-3200A	3VA1332-6EF32-0AA0
		400A	280 - 400A	2000-4000A	3VA1340-6EF32-0AA0
		500A	350 - 500A	2500-5000A	3VA1450-6EF32-0AA0
		630A	440 - 630A	2520-5040A	3VA1463-6EF32-0AA0
	4	800A	560-800A	5 to 10A x In	3VA1580-6EF32-0AA0
		1000A	700-1000A	5 to 10A x In	3VA1510-6EF32-0AA0

Front view



Characteristic curve

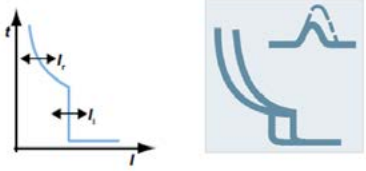

3VA1 MCCB ACCESSORIES

PART NUMBER	TO SUIT	DESCRIPTION

Auxiliary switches & alarm switches



3VA9988-0AA12	3VA1 - All	1 C/O Auxiliary Switch 1 Module (HQ)
3VA9988-0AA11	3VA1 - All	1 C/O Auxiliary Switch 2 Module (HP)
3VA9988-0AB12	3VA1 - All	1 C/O Trip Alarm Switch 1 Module (HQ)
3VA9988-0AB11	3VA1 - All	1 C/O Trip Alarm Switch 2 Module (HP)

Note: HP module can have two conductors per contact point for looping.

Shunt trips (left side)



3VA9988-0BL30	3VA1 - All	24V AC/DC
3VA9988-0BL32	3VA1 - All	110VAC
3VA9988-0BL33	3VA1 - All	240VAC

Undervoltage release (left side)

3VA9908-0BB11	3VA1 - All	24VDC
3VA9908-0BB25	3VA1 - All	220-230 VAC

Door mounted rotary operator standard IP65 with door interlock padlocking with 300mm shaft



3VA9157-0FK21	3VA11 100 & 160A	Includes - Handle, 300mm shaft and coupler
3VA9257-0FK21	3VA12 250A	Includes - Handle, 300mm shaft and coupler
3VA9467-0FK21	3VA13 & 14 400 & 630A	Includes - Handle, 300mm shaft and coupler
3VA9687-0FK21	3VA15 800 & 1000A	Includes - Handle, 300mm shaft and coupler

Terminal covers

(1 set = 1 unit)





3VA9111-0WD30	3VA11 100 & 160A	Flush 3 Pole Cover
3VA9211-0WD30	3VA12 250A	Flush 3 Pole Cover
3VA9481-0WD30	3VA13 & 14 400 & 630A	Flush 3 Pole Cover
3VA9601-0WD30	3VA15 800 & 1000A	Flush 3 Pole Cover
3VA9111-0WF30	3VA11 100 & 160A	Extended 3 Pole Cover
3VA9211-0WF30	3VA12 250A	Extended 3 Pole Cover
3VA9481-0WF30	3VA13 & 14 400 & 630A	Extended 3 Pole Cover

Extension bars - straight



3VA9153-0QB00	3VA11 100 & 160A	Three phase extension bar with two phase barriers
3VA9253-0QB00	3VA12 250A	Three phase extension bar with two phase barriers
3VA9483-0QB00	3VA13 & 14 400 & 630A	Three phase extension bar with two phase barriers

Extension bars - offset



3VA9153-0QC00	3VA11 100 & 160A	Three phase extension bar with two phase barriers
3VA9253-0QC00	3VA12 250A	Three phase extension bar with two phase barriers
3VA9483-0QC00	3VA13 & 14 400 & 630A	Three phase extension bar with two phase barriers

3VA1 MCCB ACCESSORIES

PART NUMBER	TO SUIT	DESCRIPTION

Tunnel terminals (contains 3 single terminals)



3VA9153-0JA11	3VA11 100 & 160A	Box Terminals upto 70mm²
3VA9253-0JA11	3VA12 250A	Box Terminals upto 120mm²
3VA9483-0JA13	3VA13 & 4 400 & 630A	Box Terminals upto 300mm² *

*Only up to 400A

RCD modules (type A)



3VA9114-0RS10	3VA1 160A	4 Pole Side Mount, 0.03 to 5A, No Time Delay
3VA9113-0RS20	3VA1 160A	3 Pole Side Mount, 0.03 to 5A, Time Delay up to 3sec
3VA9213-0RS20	3VA1 250A	3 Pole Side Mount, 0.03 to 5A, Time Delay up to 3sec
3VA9114-0RS20	3VA1 160A	4 Pole Side Mount, 0.03 to 5A, Time Delay up to 3sec
3VA9214-0RS20	3VA1 250A	4 Pole Side Mount, 0.03 to 5A, Time Delay up to 3sec



3VA9114-0RL10	3VA1 160A	4 Pole Bottom Mount, 0.03 to 5A, No Time Delay
3VA9113-0RL20	3VA1 160A	3 Pole Bottom Mount, 0.03 to 5A, Time Delay up to 3sec
3VA9213-0RL20	3VA1 250A	3 Pole Bottom Mount, 0.03 to 5A, Time Delay up to 3sec
3VA9114-0RL20	3VA1 160A	4 Pole Bottom Mount, 0.03 to 5A, Time Delay up to 3sec
3VA9214-0RL20	3VA1 250A	4 Pole Bottom Mount, 0.03 to 5A, Time Delay up to 3sec

Motor operator without stored energy operator



3VA9117-0HB10	3VA11 100 & 160A	24 to 60VDC Side Mount
3VA9117-0HB20	3VA11 100 & 160A	110 to 230VAC, 110 to 250VDC Side Mount



3VA9157-0HA10	3VA11 100 & 160A	24 to 60VDC Front Mount
3VA9257-0HA10	3VA12 250A	24 to 60VDC Front Mount
3VA9467-0HA10	3VA13 & 4 400 & 630A	24 to 60VDC Front Mount
3VA9157-0HA20	3VA11 100 & 160A	110 to 230VAC, 110 to 250VDC Front Mount
3VA9257-0HA20	3VA12 250A	110 to 230VAC, 110 to 250VDC Front Mount
3VA9467-0HA20	3VA13 & 4 400 & 630A	110 to 230VAC, 110 to 250VDC Front Mount

Padlock attachment



3VA9088-0LB10	3VA11 & 12	Locking device for toggle levers
3VA9388-0LB10	3VA13 & 14	Locking device for toggle levers
3VA9588-0LB10	3VA15	Locking device for toggle levers

Bus Plugs



UPVA13160	3VA11	3 Pole Bus Plug 160A to suit 6.3mm thick busbar
UPVA23250	3VA12	3 Pole Bus Plug 250A to suit 6.3mm thick busbar
UPVA23400	3VA13	3 Pole Bus Plug 400A to suit 6.3mm thick busbar
UPVA33630	3VA14	3 Pole Bus Plug 630A to suit 6.3mm thick busbar

MOULDED CASE CIRCUIT BREAKERS 3VA2 3 POLE ETU LI

FRAME SIZE (FS)	In (A) RATED	Ir (A) SETTING	Ii (A) SETTING	PART NUMBER

3VA2 MCCBs - ETU320 LI

3 Pole, 25A - 1000A

Line protection - Electronic Trip unit (ETU320 LI)



55kA at 415V Line protection ETU320 LI	2A	25A	10 - 25A	38-300A	3VA2025-5HL32-0AA0
		40A	16 - 40A	60-480A	3VA2040-5HL32-0AA0
		63A	25 - 63A	95-756A	3VA2063-5HL32-0AA0
		100A	40 - 100A	150-1200A	3VA2010-5HL32-0AA0
		160A	63 - 160A	240-1600A	3VA2116-5HL32-0AA0
		250A	100 - 250A	375-2500A	3VA2225-5HL32-0AA0
	3	400A	160 - 400A	600-4000A	3VA2340-5HL32-0AA0
		630A	250 - 630A	945-5670A	3VA2463-5HL32-0AA0
	4	800A	320 - 800A	1200-9600A	3VA2580-5HL32-0AA0
		1000A	400 - 1000A	1500-10000A	3VA2510-5HL32-0AA0
85kA at 415V Line protection ETU320 LI	2A	25A	10 - 25A	38-300A	3VA2025-6HL32-0AA0
		40A	16 - 40A	60-480A	3VA2040-6HL32-0AA0
		63A	25 - 63A	95-756A	3VA2063-6HL32-0AA0
		100A	40 - 100A	150-1200A	3VA2010-6HL32-0AA0
		160A	63 - 160A	240-1600A	3VA2116-6HL32-0AA0
		250A	100 - 250A	375-2500A	3VA2225-6HL32-0AA0
	3	400A	160 - 400A	600-4000A	3VA2340-6HL32-0AA0
		630A	250 - 630A	945-5670A	3VA2463-6HL32-0AA0
	4	800A	320 - 800A	1200-9600A	3VA2580-6HL32-0AA0
		1000A	400 - 1000A	1500-10000A	3VA2510-6HL32-0AA0



ETU320 LI = Electronic Trip Unit with LI protection functions for 3P 3VA2 MCCBs includes following:

- Adjustable parameter settings Ir and tr for overload protection (L)
- Adjustable parameter setting Ii for instantaneous short-circuit protection (I)

3VA2 MCCBs Dimensions					
Frame size (FS)	**A (3P)**	**A (4P)**	**B**	**C**	**D**
2A	105	140	181	83	107
3	138	184	248	110	173
4	210	280	320	117	253

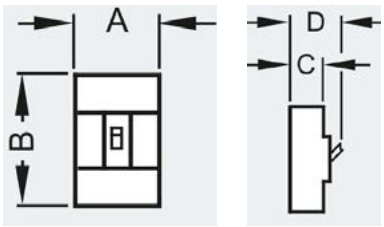

Note: All dimensions are in mm.

MOULDED CASE CIRCUIT BREAKERS 3VA2 3 POLE ETU LSI

FRAME SIZE (FS)	In (A) RATED	Isd (A) SETTING	Ir (A) SETTING	Ii (A) SETTING	PART NUMBER

3VA2 MCCBs - ETU350 LSI

3 Pole, 25A - 1600A

Line protection - Electronic Trip unit (ETU350 LSI)

55kA at 415V Line protection ETU350 LSI	2A	25A	1.5 to 10A x Ir	10 - 25A	300A	3VA2025-5HN32-0AA0
		40A	1.5 to 10A x Ir	16 - 40A	480A	3VA2040-5HN32-0AA0
		63A	1.5 to 10A x Ir	25 - 63A	756A	3VA2063-5HN32-0AA0
		100A	1.5 to 10A x Ir	40 - 100A	1200A	3VA2010-5HN32-0AA0
		160A	1.5 to 10A x Ir	63 - 160A	1600A	3VA2116-5HN32-0AA0
		250A	1.5 to 10A x Ir	100 - 250A	2500A	3VA2225-5HN32-0AA0
	3	400A	1.5 to 10A x Ir	160 - 400A	4000A	3VA2340-5HN32-0AA0
		630A	1.5 to 9A x Ir	250 - 630A	5670A	3VA2463-5HN32-0AA0
	4	800A	1.5 to 10A x Ir	320 - 800A	9600A	3VA2580-5HN32-0AA0
		1000A	1.5 to 10A x Ir	400 - 1000A	10000A	3VA2510-5HN32-0AA0
	5	1250A	1.0 to 10A x In	500-1250A	1.5 to 15A x In	3VA2712-5AC03-0AA0
		1600A	1.0 to 10A x In	640 - 1600A	1.5 to 15A x In	3VA2716-5AC03-0AA0
85kA at 415V Line protection ETU350 LSI	2A	25A	1.5 to 10A x Ir	25 - 10A	300A	3VA2025-6HN32-0AA0
		40A	1.5 to 10A x Ir	16 - 40A	480A	3VA2040-6HN32-0AA0
		63A	1.5 to 10A x Ir	25 - 63A	756A	3VA2063-6HN32-0AA0
		100A	1.5 to 10A x Ir	40 - 100A	1200A	3VA2010-6HN32-0AA0
		160A	1.5 to 10A x Ir	63 - 160A	1600A	3VA2116-6HN32-0AA0
		250A	1.5 to 10A x Ir	100 - 250A	2500A	3VA2225-6HN32-0AA0
	3	400A	1.5 to 10A x Ir	160 - 400A	4000A	3VA2340-6HN32-0AA0
		630A	1.5 to 9A x Ir	250 - 630A	5670A	3VA2463-6HN32-0AA0
	4	800A	1.5 to 10A x Ir	320 - 800A	9600A	3VA2580-6HN32-0AA0
		1000A	1.5 to 10A x Ir	400 - 1000A	10000A	3VA2510-6HN32-0AA0
	5	1250A	1.0 to 10A x In	500-1250A	1.5 to 15A x In	3VA2712-6AC03-0AA0
		1600A	1.0 to 10A x In	640 - 1600A	1.5 to 15A x In	3VA2716-6AC03-0AA0



3VA27 MCCBs (FS 5)

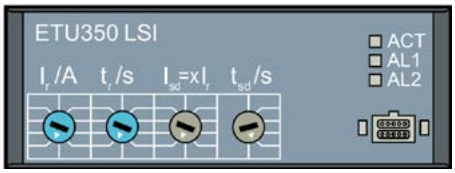

ETU350 LSI = Electronic Trip Unit with LSI protection functions for 3P 3VA2 MCCBs includes following:

- Adjustable parameter settings Ir and tr for overload protection (L)
- Adjustable parameter settings Isd and tsd for short-time delayed short circuit protection (S)
- Fixed parameter setting Ii for instantaneous short-circuit protection (I)

3VA2 MCCBs Dimensions					
Frame size (FS)	A (3P)	A (4P)	B	C	D
2A	105	140	181	83	107
3	138	184	248	110	173
4	210	280	320	117	253
5	214		236	184	285.9

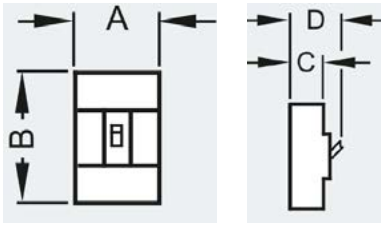

Note: All dimensions are in mm.

MOULDED CASE CIRCUIT BREAKERS 3VA2 3 POLE ETU LIG

	FRAME SIZE (FS)	In (A) RATED	Ir (A) SETTING	Li (A) SETTING	Ig (A) SETTING	PART NUMBER

3VA2 MCCBs - ETU330 LIG

3 Pole, 25A - 1000A

Line protection with Ground Fault - Electronic Trip unit (ETU330 LIG)

55kA at 415V Line protection ETU330 LIG	2A	25A	10 - 25A	38-300A	15-25A	3VA2025-5HM32-0AA0
		40A	16 - 40A	60-480A	16-40A	3VA2040-5HM32-0AA0
		63A	25 - 63A	95-756A	16-63A	3VA2063-5HM32-0AA0
		100A	40 - 100A	150-1200A	20-100A	3VA2010-5HM32-0AA0
		160A	63 - 160A	240-1600A	32-160A	3VA2116-5HM32-0AA0
		250A	100 - 250A	375-2500A	50-250A	3VA2225-5HM32-0AA0
	3	400A	160 - 400A	600-4000A	80-400A	3VA2340-5HM32-0AA0
		630A	250 - 630A	945-5670A	126-630A	3VA2463-5HM32-0AA0
	4	800A	320 - 800A	1200-9600A	160-800A	3VA2580-5HM32-0AA0
		1000A	400 - 1000A	1500-10000A	200-1000A	3VA2510-5HM32-0AA0
85kA at 415V Line protection ETU330 LIG	2A	25A	25 - 10A	38-300A	15-25A	3VA2025-6HM32-0AA0
		40A	16 - 40A	60-480A	16-40A	3VA2040-6HM32-0AA0
		63A	25 - 63A	95-756A	16-63A	3VA2063-6HM32-0AA0
		100A	40 - 100A	150-1200A	20-100A	3VA2010-6HM32-0AA0
		160A	63 - 160A	240-1600A	32-160A	3VA2116-6HM32-0AA0
		250A	100 - 250A	375-2500A	50-250A	3VA2225-6HM32-0AA0
	3	400A	160 - 400A	600-4000A	80-400A	3VA2340-6HM32-0AA0
		630A	250 - 630A	945-5670A	126-630A	3VA2463-6HM32-0AA0
	4	800A	320 - 800A	1200-9600A	160-800A	3VA2580-6HM32-0AA0
		1000A	400 - 1000A	1500-10000A	200-1000A	3VA2510-6HM32-0AA0



ETU330 LIG = Electronic Trip Unit with LIG protection functions for 3P 3VA2 MCCBs includes following:

- IAdjustable parameter settings Ir and tr for overload protection (L)
- Adjustable parameter setting Ii for instantaneous short-circuit protection (I)
- Adjustable parameter settings Ig and tg for ground-fault protection (G)

3VA2 MCCBs Dimensions					
Frame size (FS)	A (3P)	A (4P)	B	C	D
2A	105	140	181	83	107
3	138	184	248	110	173
4	210	280	320	117	253

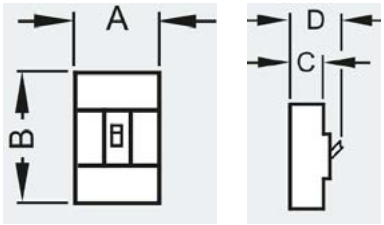

Note: All dimensions are in mm.

MCCB ACCESSORIES - 3VA2

PART NUMBER	TO SUIT	DESCRIPTION

Auxiliary switches & alarm switches



3VA9988-0AA12	3VA2 3 & 4 Pole	1 C/O Auxiliary Switch 1 Module (HQ)
3VA9988-0AA11	3VA2 3 & 4 Pole	1 C/O Auxiliary Switch 2 Module (HP)
3VA9988-0AB12	3VA2 3 & 4 Pole	1 C/O Trip Alarm Switch 1 Module (HQ)
3VA9988-0AB11	3VA2 3 & 4 Pole	2 C/O Trip Alarm Switch 2 Module (HP)

Note: HP module can have two conductors per contact point for looping.

Shunt trips (left side)



3VA9988-0BL30	3VA2 3 & 4 Pole	24V AC/DC
3VA9988-0BL32	3VA2 3 & 4 Pole	110VAC
3VA9988-0BL33	3VA2 3 & 4 Pole	240VAC

Undervoltage release (left side)

3VA9908-0BB11	3VA2 3 & 4 Pole	24VDC
3VA9908-0BB25	3VA2 3 & 4 Pole	220-230 VAC

Door mounted rotary operator standard IP65 with door interlock padlocking with 300mm shaft



3VA9267-0FK21	3VA20,21 & 22 100, 160 & 250A	Includes - Handle, 300mm shaft and coupler
3VA9467-0FK21	3VA23 & 24 400 & 630A	Includes - Handle, 300mm shaft and coupler
3VA9687-0FK21	3VA25 800 & 1000A	Includes - Handle, 300mm shaft and coupler

Note: Red/Yellow handles available, change FK21 to FK25 in part number.

Motor operator without stored energy operator



3VA9267-0HA10	3VA20,1 & 2 100, 160 & 250A	24 to 60VDC Front Mount
3VA9467-0HA10	3VA23 & 4 400 & 630A	24 to 60VDC Front Mount
3VA9267-0HA20	3VA20,1 & 2 100, 160 & 250A	110 to 230VAC, 110 to 250VDC Front Mount
3VA9467-0HA20	3VA23 & 4 400 & 630A	110 to 230VAC, 110 to 250VDC Front Mount

Motor operator with stored energy operator (SEO520)



3VA9267-0HC10	3VA20,1 & 2 100, 160 & 250A	24VDC Front Mount
3VA9267-0HC20	3VA20,1 & 2 100, 160 & 250A	42 to 60V AC/DC Front Mount
3VA9267-0HC30	3VA20,1 & 2 100, 160 & 250A	110 to 230VAC, 110 to 250VDC Front Mount

Motor operator with stored energy operator (SEO520) with Communication Link

3VA9267-0HC15	3VA20,1 & 2 100, 160 & 250A	24VDC Front Mount
3VA9267-0HC35	3VA20,1 & 2 100, 160 & 250A	110 to 230VAC, 110 to 250VDC Front Mount

Terminal covers

(1 set = 1 unit)



3VA9221-0WD30	3VA20,21 & 22 100, 160 & 250A	Flush 3 Pole Cover
3VA9481-0WD30	3VA23 & 24 400 & 630A	Flush 3 Pole Cover
3VA9601-0WD30	3VA25 800 & 1000A	Flush 3 Pole Cover
3VA9221-0WF30	3VA20,21 & 22 100, 160 & 250A	Extended 3 Pole Cover
3VA9481-0WF30	3VA23 & 24 400 & 630A	Extended 3 Pole Cover

MCCB ACCESSORIES - 3VA2

PART NUMBER	TO SUIT	DESCRIPTION

Tunnel terminals (contains 3 single terminals)



3VA9163-0JA12	3VA20,1 & 2 100, 160 & 250A	Box Terminals up to 120 mm2
3VA9263-0JA12	3VA20,1 & 2 100, 160 & 250A	Box Terminals up to 185 mm2
3VA9483-0JA13	3VA23 & 4 400 & 630A	Box Terminals up to 300 mm2*

*Only up to 400A

Extension bars - straight



3VA9253-0QB00	3VA20,1 & 2 100, 160 & 250A	Three phase extension bar with two phase barriers
3VA9483-0QB00	3VA23 & 4 400 & 630A	Three phase extension bar with two phase barriers
3VA9603-0QB00	3VA25 800 & 1000A	Three phase extension bar with two phase barriers

Extension bars - offset



3VA9263-0QC00	3VA20,1 & 2 100, 160 & 250A	Three phase extension bar with two phase barriers
3VA9483-0QC00	3VA23 & 4 400 & 630A	Three phase extension bar with two phase barriers

Note: Distance between pole centers: 3VA20,1 & 2 100, 160 & 250A = 45 mm, 3VA23 & 4 400 & 630A = 70 mm.

RCD modules (type A)



3VA9123-0RL30	3VA20 & 1 100 & 160A	3P Bottom Mt., 0.03 to 30A, Time Delay to 10sec
3VA9223-0RL30	3VA22 250A	3P Bottom Mt., 0.03 to 30A, Time Delay to 10sec
3VA9323-0RL30	3VA23 400A	3P Bottom Mt., 0.03 to 30A, Time Delay to 10sec
3VA9423-0RL30	3VA24 630A	3P Bottom Mt., 0.03 to 30A, Time Delay to 10sec



3VA9124-0RL30	3VA20 & 1 100 & 160A	4P Bottom Mt., 0.03 to 30A, Time Delay to 10sec
3VA9224-0RL30	3VA22 250A	4P Bottom Mt., 0.03 to 30A, Time Delay to 10sec
3VA9324-0RL30	3VA23 400A	4P Bottom Mt., 0.03 to 30A, Time Delay to 10sec
3VA9424-0RL30	3VA24 630A	4P Bottom Mt., 0.03 to 30A, Time Delay to 10sec

Note: 30 A setting range only for Type AC applications.

Padlock attachment



3VA9388-0LB10	3VA20,21,22,23 & 24	Locking device for toggle levers
3VA9588-0LB10	3VA25	Locking device for toggle levers

Bus Plugs



UPVA23250	3VA20, 21, 22	3 Pole Bus Plug 250A to suit 6.3mm thick busbar
UPVA23400	3VA23	3 Pole Bus Plug 400A to suit 6.3mm thick busbar
UPVA33630	3VA24	3 Pole Bus Plug 630A to suit 6.3mm thick busbar

MCCB ENCAPSULATED CHASSIS 630A - 800A

Suitable for frame size 2 and 2A

POLES	DOUBLE SIDED UNIVERSAL FEED	DOUBLE SIDED TOP FEED	DOUBLE SIDED BOTTOM FEED
	PART NUMBER	PART NUMBER	PART NUMBER

630A EHC2 Chassis (suits 3VA12, 3VA20, 21 and 22 frames)

6	EHC263006U	EHC263006T	EHC263006B
12	EHC263012U	EHC263012T	EHC263012B
18	EHC263018U	EHC263018T	EHC263018B
24	EHC263024U	EHC263024T	EHC263024B
30	EHC263030U	EHC263030T	EHC263030B
36	EHC263036U	EHC263036T	EHC263036B
42	EHC263042U	EHC263042T	EHC263042B
48	EHC263048U	EHC263048T	EHC263048B
60	EHC263060U	EHC263060T	EHC263060B
72	EHC263072U	EHC263072T	EHC263072B

Replace LH with RH for Right Hand side

POLES	SINGLE SIDED UNIVERSAL FEED	SINGLE SIDED TOP FEED	SINGLE SIDED BOTTOM FEED
	LEFT / RIGHT HAND	LEFT / RIGHT HAND	LEFT / RIGHT HAND
	PART NUMBER	PART NUMBER	PART NUMBER

630A EHC2 Chassis (suits 3VA12, 3VA20, 21 and 22 frames)

3	EHC2630LH03U	EHC2630LH03T	EHC2630LH03B
6	EHC2630LH06U	EHC2630LH06T	EHC2630LH06B
9	EHC2630LH09U	EHC2630LH09T	EHC2630LH09B
12	EHC2630LH12U	EHC2630LH12T	EHC2630LH12B
15	EHC2630LH15U	EHC2630LH15T	EHC2630LH15B
18	EHC2630LH18U	EHC2630LH18T	EHC2630LH18B
21	EHC2630LH21U	EHC2630LH21T	EHC2630LH21B
24	EHC2630LH24U	EHC2630LH24T	EHC2630LH24B
30	EHC2630LH30U	EHC2630LH30T	EHC2630LH30B
36	EHC2630LH36U	EHC2630LH36T	EHC2630LH36B

POLES	DOUBLE SIDED UNIVERSAL FEED	DOUBLE SIDED TOP FEED	DOUBLE SIDED BOTTOM FEED
	PART NUMBER	PART NUMBER	PART NUMBER

800A EHC2 Chassis (suits 3VA12, 3VA20, 21 and 22 frames)

6	EHC280006U	EHC280006T	EHC280006B
12	EHC280012U	EHC280012T	EHC280012B
18	EHC280018U	EHC280018T	EHC280018B
24	EHC280024U	EHC280024T	EHC280024B
30	EHC280030U	EHC280030T	EHC280030B
36	EHC280036U	EHC280036T	EHC280036B
42	EHC280042U	EHC280042T	EHC280042B
48	EHC280048U	EHC280048T	EHC280048B
60	EHC280060U	EHC280060T	EHC280060B
72	EHC280072U	EHC280072T	EHC280072B

POLES	SINGLE SIDED UNIVERSAL FEED	SINGLE SIDED TOP FEED	SINGLE SIDED BOTTOM FEED
	LEFT / RIGHT HAND	LEFT / RIGHT HAND	LEFT / RIGHT HAND
	PART NUMBER	PART NUMBER	PART NUMBER
3	EHC2800LH03U	EHC2800LH03T	EHC2800LH03B
6	EHC2800LH06U	EHC2800LH06T	EHC2800LH06B
9	EHC2800LH09U	EHC2800LH09T	EHC2800LH09B
12	EHC2800LH12U	EHC2800LH12T	EHC2800LH12B
15	EHC2800LH15U	EHC2800LH15T	EHC2800LH15B
18	EHC2800LH18U	EHC2800LH18T	EHC2800LH18B
21	EHC2800LH21U	EHC2800LH21T	EHC2800LH21B
24	EHC2800LH24U	EHC2800LH24T	EHC2800LH24B
30	EHC2800LH30U	EHC2800LH30T	EHC2800LH30B
36	EHC2800LH36U	EHC2800LH36T	EHC2800LH36B

Replace LH with RH for Right Hand side

MCCB ENCAPSULATED CHASSIS 630A - 800A

POLES	DIMENSIONS MM					
	A UNIVERSAL	A TOP/BOTTOM	B	C	D	E
6	393	268	137	117	105	107
12	498	373	242	222	210	212
18	603	478	347	327	315	317
24	708	583	452	432	420	422
30	813	688	557	537	525	527
36	918	793	662	642	630	632
42	1023	898	767	747	735	737
48	1128	1003	872	852	840	842
60	1338	1213	1082	1062	1050	1052
72	1548	1423	1292	1272	1260	1262

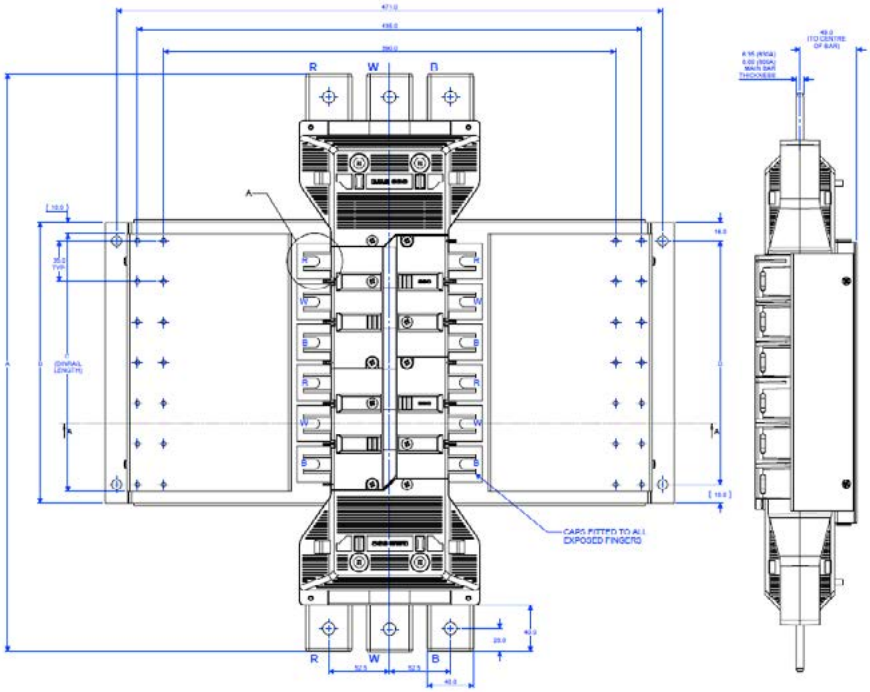

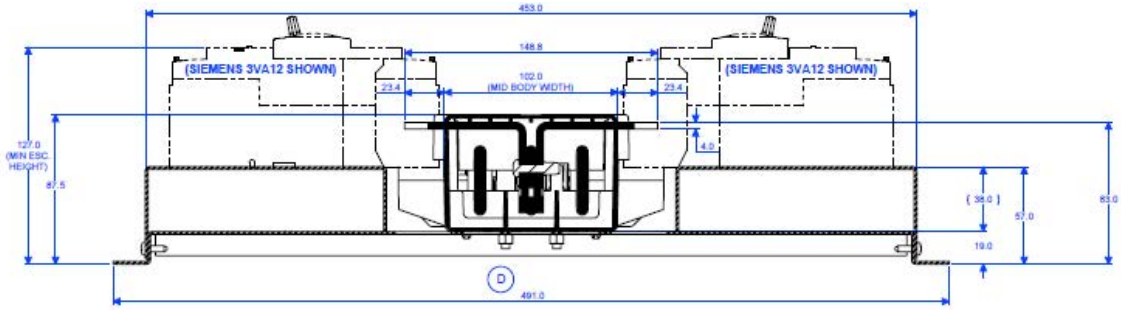

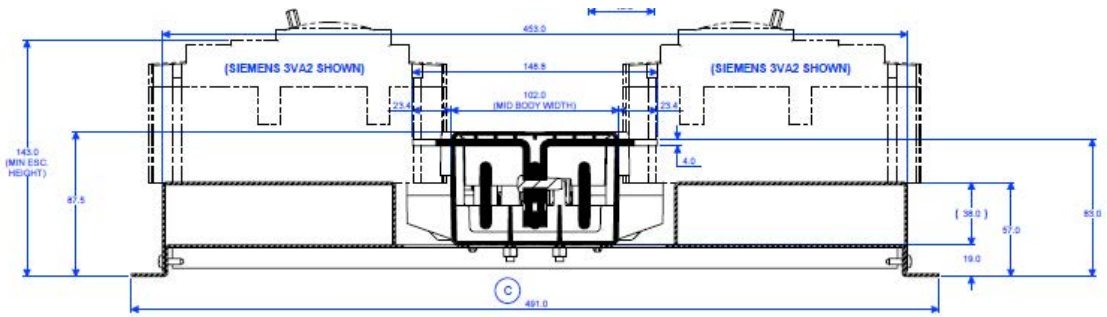

MOULDED CASE CIRCUIT BREAKERS 3VA2 3 POLE ETU LSI COMMUNICATIONS CAPABLE

3VA2 MCCBs - ETU550 LSI

3 Pole, 25A - 1000A

Line protection - Electronic Trip unit (ETU550 LSI)





FRAME SIZE (FS)	In (A) RATED	Isd (A) SETTING	Ir (A) SETTING	Ii (A) SETTING	PART NUMBER
55kA at 415V Line protection ETU550 LSI	2A	25	15-250	10 -25	38-300	3VA2025-5JP32-0AA0
		40	24-400	16 - 40	60-480	3VA2040-5JP32-0AA0
		63	38-630	25 - 63	95-756	3VA2063-5JP32-0AA0
		100	60-1000	40 - 100	150-1200	3VA2010-5JP32-0AA0
		160	96-1600	63 - 160	240-1600	3VA2116-5JP32-0AA0
		250	150-2500	100 - 250	375-2500	3VA2225-5JP32-0AA0
	3	400	240-4000	160 - 400	600-4000	3VA2340-5JP32-0AA0
		630	378-5670	250 - 630	945-5670	3VA2463-5JP32-0AA0
	4	800	480-8000	320 - 800	1200-8000	3VA2580-5JP32-0AA0
		1000	600-10000	400 - 1000	1500-10000	3VA2510-5JP32-0AA0
85kA at 415V Line protection ETU550 LSI	2A	25	1.5 to 10 x Ir	10 -25	38-300	3VA2025-6JP32-0AA0
		40	1.5 to 10 x Ir	16 - 40	60-480	3VA2040-6JP32-0AA0
		63	1.5 to 10 x Ir	25 - 63	95-756	3VA2063-6JP32-0AA0
		100	1.5 to 10 x Ir	40 - 100	150-1200	3VA2010-6JP32-0AA0
		160	1.5 to 10 x Ir	63 - 160	240-1600	3VA2116-6JP32-0AA0
		250	1.5 to 10 x Ir	100 - 250	375-2500	3VA2225-6JP32-0AA0
	3	400	1.5 to 10 x Ir	160 - 400	600-4000	3VA2340-6JP32-0AA0
		630	1.5 to 9 x Ir	250 - 630	945-5670	3VA2463-6JP32-0AA0
70kA at 415V ETU550 LSI	4	800	1.5 to 10 x Ir	320 - 800	1200-8000	3VA2580-6JP32-0AA0
		1000	1.5 to 10 x Ir	400 - 1000	1500-10000	3VA2510-6JP32-0AA0



ETU550 LSI = Electronic Trip Unit with LSI protection functions for 3P 3VA2 MCCBs includes following:

- Adjustable parameter settings Ir and tr for overload protection (L)
- Adjustable parameter settings Isd and tsd for short-time delayed short circuit protection (S)
- Adjustable parameter setting Ii for instantaneous short-circuit protection (I)
- Adjustable parameter settings Isd and tsd for short-time delayed short circuit protection (Isd)

3VA2 MCCBs Dimensions					
Frame size (FS)	**A (3P)**	**A (4P)**	**B**	**C**	**D**
2A	105	140	181	83	107
3	138	184	248	110	173
4	210	280	320	117	253

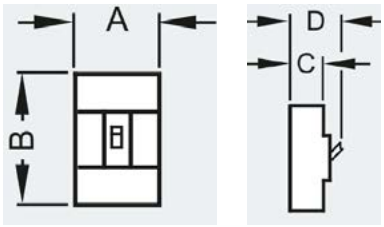

Note: All dimensions are in mm.

MOULDED CASE CIRCUIT BREAKERS 3VA2 3 POLE ETU LSI COMMUNICATIONS CAPABLE WITH INBUILT METERING

	FRAME SIZE (FS)	In (A) RATED	Isd (A) SETTING	Ir (A) SETTING	Ii (A) SETTING	PART NUMBER

3VA2 MCCBs - ETU850 LSI/LSIG

3 Pole, 25A - 1000A

Line protection - Electronic Trip unit (ETU550 LSI)

55kA at 415V Line protection ETU850 LSI	2A	25	15-250	10 -25	38-300	3VA2025-5KP32-0AA0
		40	24-400	16 - 40	60-480	3VA2040-5KP32-0AA0
		63	38-630	25 - 63	95-756	3VA2063-5KP32-0AA0
		100	60-1000	40 - 100	150-1200	3VA2010-5KP32-0AA0
		160	96-1600	63 - 160	240-1600	3VA2116-5KP32-0AA0
		250	150-2500	100 - 250	375-2500	3VA2225-5KP32-0AA0
	3	400	240-4000	160 - 400	600-4000	3VA2340-5KP32-0AA0
		630	378-5670	250 - 630	945-5670	3VA2463-5KP32-0AA0
55kA at 415V ETU850 LSIG	4	800	480-8000	320 - 800	1200-8000	3VA2580-5KQ32-0AA0
		1000	600-10000	400 - 1000	1500-10000	3VA2510-5KQ32-0AA0
85kA at 415V Line protection ETU850 LSI	2A	25	1.5 to 10 x Ir	10 -25	38-300	3VA2025-6KP32-0AA0
		40	1.5 to 10 x Ir	16 - 40	60-480	3VA2040-6KP32-0AA0
		63	1.5 to 10 x Ir	25 - 63	95-756	3VA2063-6KP32-0AA0
		100	1.5 to 10 x Ir	40 - 100	150-1200	3VA2010-6KP32-0AA0
		160	1.5 to 10 x Ir	63 - 160	240-1600	3VA2116-6KP32-0AA0
		250	1.5 to 10 x Ir	100 - 250	375-2500	3VA2225-6KP32-0AA0
	3	400	1.5 to 10 x Ir	160 - 400	600-4000	3VA2340-6KP32-0AA0
		630	1.5 to 9 x Ir	250 - 630	945-5670	3VA2463-6KP32-0AA0
70kA at 415V ETU850 LSIG	4	800	1.5 to 10 x Ir	320 - 800	1200-8000	3VA2580-6KQ32-0AA0
		1000	1.5 to 10 x Ir	400 - 1000	1500-10000	3VA2510-6KQ32-0AA0

- With 2 Pole molded case circuit breakers, a voltage tap for each phase and the option of connecting the potential of the neutral conductor With 4 Pole molded case circuit breakers, four internal voltage taps are provided for measuring the conductor voltages
- Additional measurement of power values (only possible with an external 24 V supply)



ETU850 LSI = Electronic Trip Unit with LSI protection functions for 3P 3VA2 MCCBs includes following:

- Adjustable parameter settings Ir and tr for overload protection (L)
- Adjustable parameter settings Isd and tsd for short-time delayed short circuit protection (S)
- Adjustable parameter setting Ii for instantaneous short-circuit protection (I)
- Adjustable parameter settings Isd and tsd for short-time delayed short circuit protection (Isd)

3VA2 MCCBs Dimensions					
Frame size (FS)	**A (3P)**	**A (4P)**	**B**	**C**	**D**
2A	105	140	181	86	107
3	138	184	248	110	137
4	210	280	320	120	253

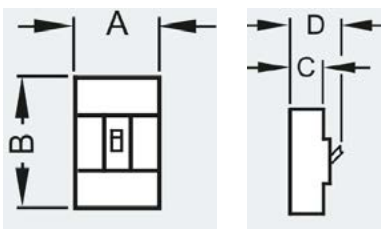

Note: All dimensions are in mm.

MCCB COMMUNICATION ACCESSORIES 3VA2



24V module ETU 5 & 8

PART NUMBER	TO SUIT	DESCRIPTION
3VA9187-0TB50	3VA20, 21 & 22	Optional 24V energy supply for ETU
3VA9387-0TB50	3VA23, 24 & 25	Optional 24V energy supply for ETU



COM 60 module (for communication with COM100/800)

3VA9187-0TB10	3VA20, 21 & 22	COM60 module (includes power supply)
3VA9387-0TB10	3VA23, 24 & 25	COM60 module (includes power supply)

Note: Mounts in right hand side of ETU, includes T connector & Cable



Breaker data server (ethernet with slot for optional Profibus DP or Profinet module)

3VA9987-0TA10	3VA2	COM800 for up to 8 3VA2 MCCBs
3VA9987-0TA20	3VA2	COM100 for one 3VA2 MCCB



Optional communication modules for breaker data server

7KM9300-0AB01-0AA0	COM100/800	Profibus DP expansion module
7KM9300-0AE01-0AA0	COM100/800	Profinet expansion module
7KM9300-0AM00-0AA0	COM100/800	RS485 Modbus RTU



Display

3VA9987-0TD10	3VA2	For displaying the status, measured values and parameters of up to 8 3VA2 moulded case circuit breakers

External function box

3VA9987-0UA10	3VA2	External function box for connection to the ETU, 4 digital outputs, 1 digital input



Connection cables

3VA9987-0TC10	3VA2	Preassembled connecting cable 0.4m
3VA9987-0TC20	3VA2	Preassembled connecting cable 1.0m
3VA9987-0TC30	3VA2	Preassembled connecting cable 2.0m
3VA9987-0TC40	3VA2	Preassembled connecting cable 4.0m

Expansion modules
- 7KM PAC **PROFIBUS DP** 7KM9300-0AB01-0AA0
- 7KM **PAC Switched Ethernet PROFINET** 7KM9300-0AE01-0AA0
- 7KM **PAC RS485 Modbus RTU** 7KM9300-0AM00-0AA0



Connection cable for 3VA-line
Preassembled connecting cable for T-Connector – T-Connector or T-Connector – COM800/COM100

- 0,4 m 3VA9987-0TC10
- 1,0 m 3VA9987-0TC20
- 2,0 m 3VA9987-0TC30
- 4,0 m 3VA9987-0TC40



Communications modul COM060
For mounting in the right-hand accessories compartment of the 3VA2
Max.: FS250A: 3VA9187-0TB10
Min.: FS400A: 3VA9387-0TB10

Delivery incl. T-Connector



Extension cable for COM060
Preassembled connecting cable for extending the COM060-to-T-connector spur line connection
COM060 – T-Connector

- 0,4m 3VA9987-0TF20
- 0,8m 3VA9987-0TF10



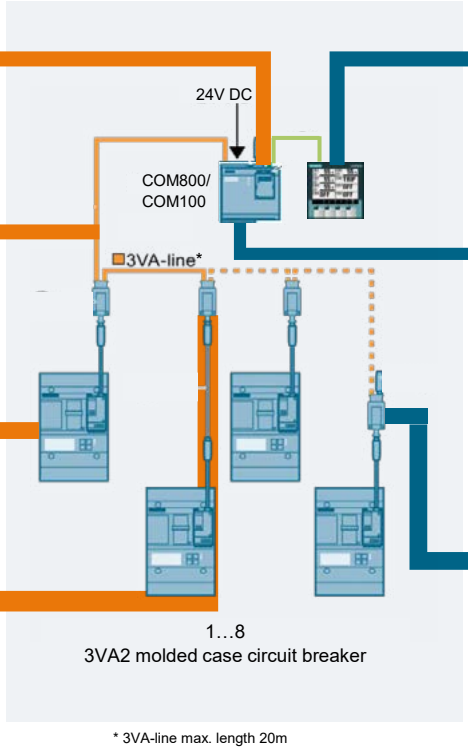

Display DSP800



- For mounting in a cubicle door
- For displaying the status, measured values of up to 8 3VA2

- **DSP800:** 3VA9987-0TD10

COM800 / COM100 breaker data server
- DIN rail mounted
- Screw mounting



- **COM800:** 3VA9987-0TA10
- **COM100:** 3VA9987-0TA20

Delivery incl. 2 terminating resistors

Mounting options T-Conncetor
- Screw mounting M3
- Cable ties
- Cable duct

T-Connector (Spare part)
3VA9987-0TG10



* 3VA-line max. length 20m

3VA INTERNAL ACCESSORIES

Internal accessories Optional equipment Slot No.:		3VA11 2-pole 160 A 23 22 21	3VA10 3 and 4-pole 100 A 23 22 21 11 12 13	3VA11 3 and 4-pole 160 A 23 22 21 11 12 13	3VA12 3 and 4-pole 250 A 24 23 22 21 11 12 13 14
Auxiliary switch	**Type**				
Auxiliary switch	AUX_HQ	x x x	x x x x x x	x x x x x x	x x x x x x x x
	AUX_HQ_el	x x x	x x x x x x	x x x x x x	x x x x x x x x
	AUX_HP	x x	x x	x x	x x x x x x
Leading changeover switch	LCS_HQ			x	x
	LCS_HQ_el			x	x
	LCS_HP			x	x
Alarm switch	**Type**				
Trip alarm switch	TAS_HQ	x x	x x x x	x x x x	x x x x
	TAS_HQ_el	x x	x x x x	x x x x	x x x x
	TAS_HP	x	x	x x	x x
Short circuit alarm switch	SAS_HQ			x	x
	SAS_HQ_el			x	x
Auxiliary release	**Type**				
Shunt trip flexible	STF	x	x	x	x
Shunt trip left	STL	x	x	x	x
	STL (EI)	x	x	x	x
Residual current release	RCR [1]			x	x
Undervoltage release	UVR	x	x	x	x
Universal release	UNI	x	x	x	x
Other					
Cylinder lock (type Ronis)			x	x	x

[1] Included in the scope of supply for side mounted residual current devices

I201_19033



3VA9988-0AA11
3VA9988-0AA12

Auxiliary switch AUX

Type/switching capacity/size
HP/high switching capacity/2 slots HQ/compact size/1 slot HQ_el/compact size/1 slot



3VA9988-0AA21
3VA9988-0AA22

Leading changeover switch LCS

Type/switching capacity/size
HP/high switching capacity/2 slots HQ/compact size/1 slot HQ_el/compact size/1 slot

3VA INTERNAL ACCESSORIES

Internal accessories Optional equipment	Slot No.:	3VA13/14 3 and 4-pole 25 24 23 22 21 630 A 11 12 13 14 15	3VA15 3 and 4-pole 25 24 23 22 21 1000 A 11 12 13 14 15
Auxiliary switch	**Type**		
Auxiliary switch	AUX_HQ	x x x x x x x x x x	x x x x x x x x x x
	AUX_HQ_el	x x x x x x x x x x	x x x x x x x x x x
	AUX_HP	x x x x x x	x x x x x x
		x x x x	x x x x
Leading changeover switch	LCS_HQ	x	x
	LCS_HQ_el	x	x
	LCS_HP	x	x
Alarm switch	**Type**		
Trip alarm switch	TAS_HQ	x x x x	x x x x
	TAS_HQ_el	x x x x	x x x x
	TAS_HP	x x	x x
Short circuit alarm switch	SAS_HQ	x	x
	SAS_HQ_el	x	x
Auxiliary release	**Type**		
Shunt trip flexible	STF	x	x
Shunt trip left	STL	x	x
	STL (EI)	x	x
Undervoltage release	UVR	x	x
Universal release	UNI	x	x
Other			
Cylinder lock (type Ronis)		x	x

I201_19689

Color coding of accessories

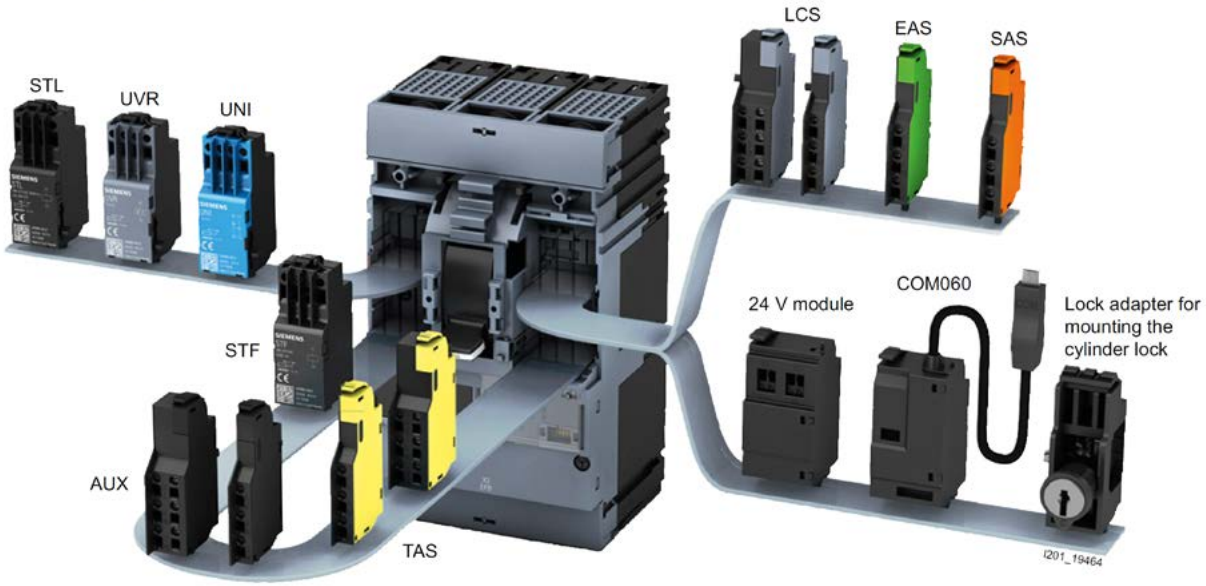

3VA INTERNAL ACCESSORIES

Internal accessories

Optional equipment

Slot No.:	3VA20/21/22 3-pole	3VA20/21/22 4-pole
	24 23 22 21 250 A 11 12 13 14	34 33 32 31 24 23 22 21 250 A 11 12 13 14
Auxiliary switch	**Type**	
Auxiliary switch	AUX_HQ	
	AUX_HQ_el	
	AUX_HP	
Leading changeover switch	LCS_HQ	
	LCS_HQ_el	
	LCS_HP	
Alarm switch	**Type**	
Trip alarm switch	TAS_HQ	
	TAS_HQ_el	
	TAS_HP	
Electrical alarm switch	EAS_HQ	
	EAS_HQ_el	
Auxiliary release	**Type**	
Shunt trip flexible	STF	
Shunt trip left	STL	
	STL (EI)	
Undervoltage release	UVR	
Universal release	UNI	
ETU/communication	**Type**	
Breaker data server communication module	COM060	
24 V module		
Other		
Cylinder lock (type Ronis)		

I201_18812





3VA9988-0AB11
3VA9988-0AB12

Trip alarm switch TAS

Type/switching capacity/size	Electronic-compatible
HP/high switching capacity/2 slots	--
HQ/compact size/1 slot	--
HQ_el/compact size/1 slot	✓

3VA INTERNAL ACCESSORIES

Internal accessories Optional equipment	Slot No.:
Auxiliary switch	**Type**
Auxiliary switch	AUX_HQ
	AUX_HQ_el
	AUX_HP
Leading changeover switch	LCS_HQ
	LCS_HQ_el
	LCS_HP
Alarm switch	**Type**
Trip alarm switch	TAS_HQ
	TAS_HQ_el
	TAS_HP
Short circuit alarm switch	SAS_HQ
	SAS_HQ_el
Auxiliary release	**Type**
Shunt trip flexible	STF
Shunt trip left	STL
	STL (EI)
Undervoltage release	UVR
Universal release	UNI
Other	
Cylinder lock (type Ronis)	

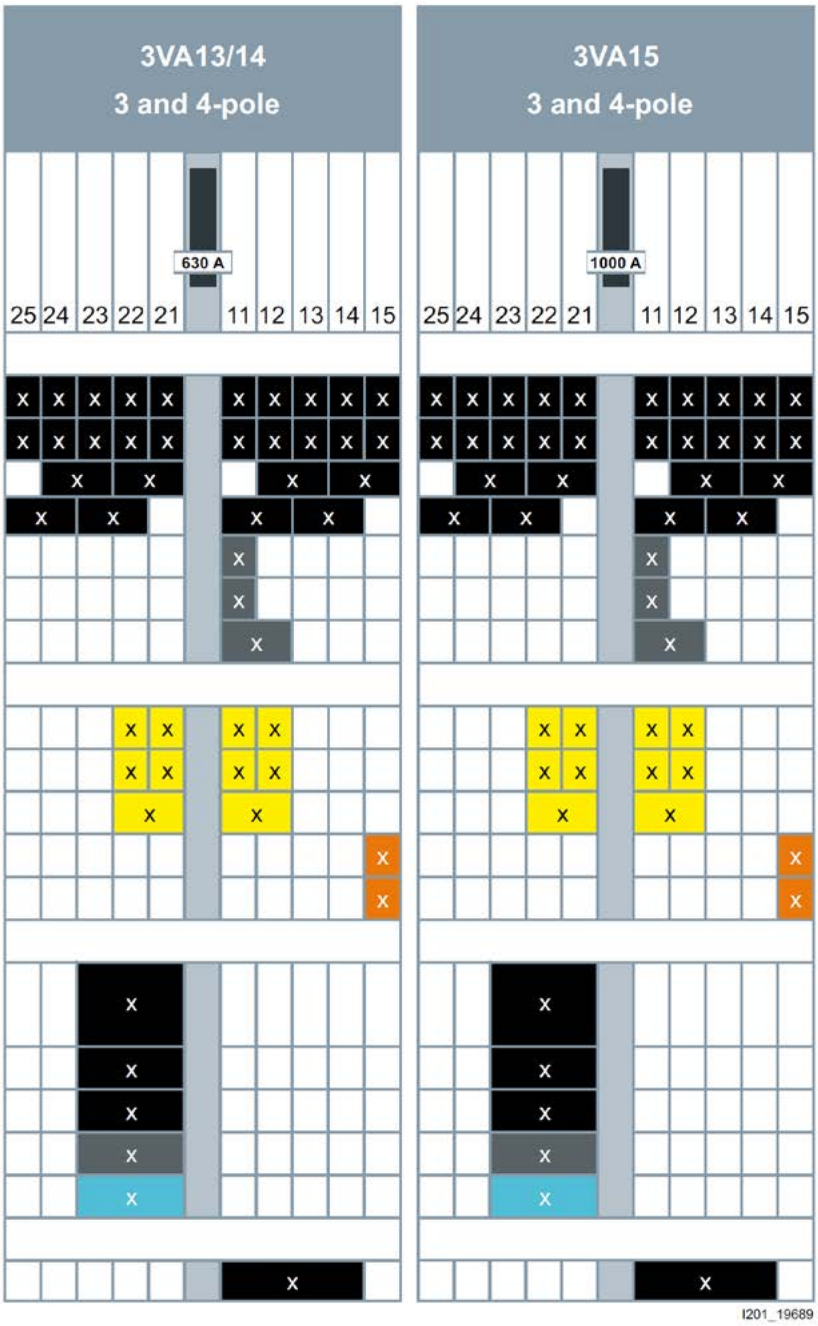



3VA9988-0AB32

Short circuit alarm switch SAS (3VA1 only)

For molded case circuit breakers/ Article No. stem	Electronic-compatible
For 3VA10, 3VA11	
• HQ/compact size/1 slot	--
• HQ_el/compact size/1 slot	✓
For 3VA12, 3VA13 and 3VA14	
• HQ/compact size/1 slot	--
• HQ_el/compact size/1 slot	✓

3VA INTERNAL ACCESSORIES

Internal accessories Optional equipment Slot No.:		3VA25 3-pole 24 23 22 21 1000 A 11 12 13 14 15 16	3VA25 4-pole 24 23 22 21 1000 A 11 12 13 14 15 16
Auxiliary switch	**Type**		
Auxiliary switch	AUX_HQ	x x x x x x x x	x x x x x x x x
	AUX_HQ_el	x x x x x x x x	x x x x x x x x
	AUX_HP	x x x x x x	x x x x x x
		x x x x	x x x x
Leading changeover switch	LCS_HQ	x	x
	LCS_HQ_el	x	x
	LCS_HP	x	x
Alarm switch	**Type**		
Trip alarm switch	TAS_HQ	x x	x x
	TAS_HQ_el	x x	x x
	TAS_HP	x	x
Electrical alarm switch	EAS_HQ	x	x
	EAS_HQ_el	x	x
Auxiliary release	**Type**		
Shunt trip flexible	STF	x	x
Shunt trip left	STL	x	x
	STL (EI)	x	x
Undervoltage release	UVR	x	x
Universal release	UNI	x	x
ETU/communication	**Type**		
Breaker data server communication module	COM060	x	x
Module 24 V		x	x

I201_19504



3VA9988-0AB22

Electrical alarm switch EAS (3VA2 only)

Type/switching capacity/size	Electronic-compatible
HQ/compact size/1 slot	--
HQ_el/compact size/1 slot	✓

3VA CIRCUIT BREAKER CLEARANCES

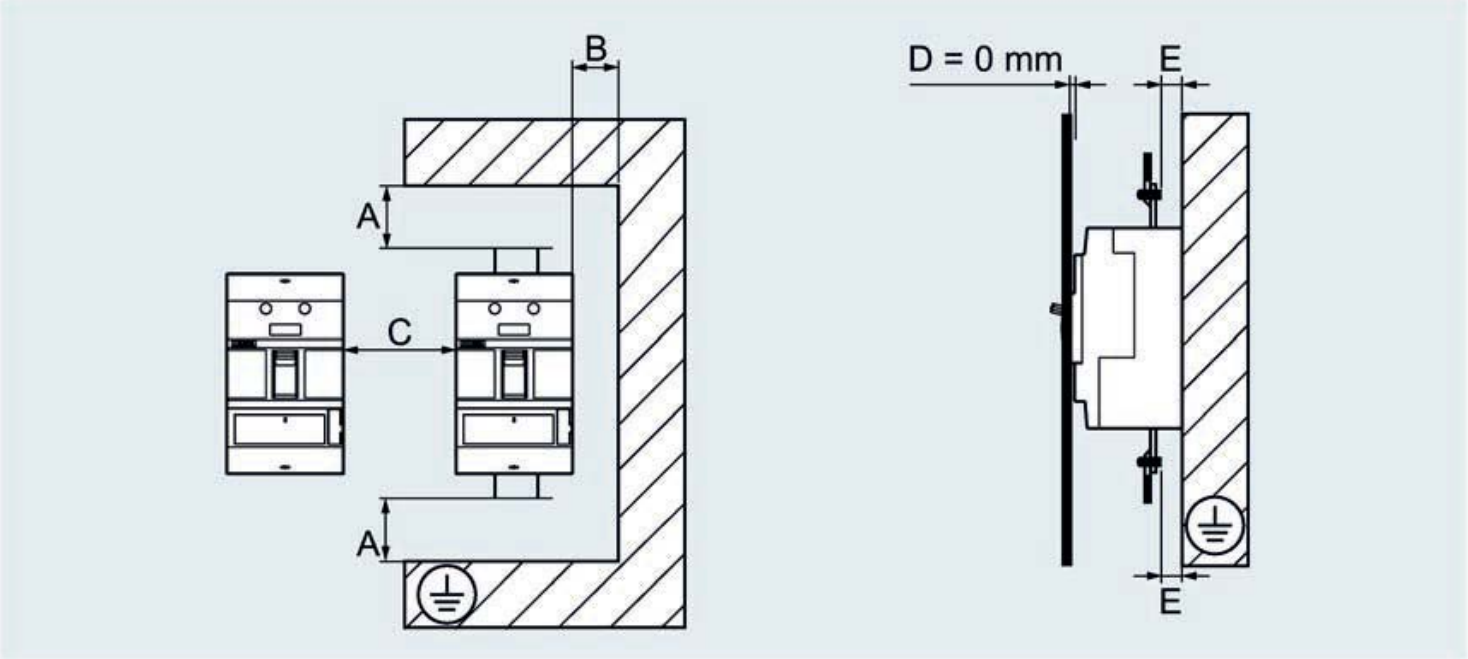

A Minimum clearance between molded case circuit breaker and current paths (uninsulated and grounded metal), see tables below

B Minimum clearance between molded case circuit breaker and side walls left / right (uninsulated and grounded metal), see tables below

C Minimum clearance between two horizontally installed molded case circuit breakers, see tables below; applicable to fixed-mounted and plug-in versions

D Minimum clearance between molded case circuit breaker and panel door

E Minimum clearance between live parts of connection technology and grounded mounting plate: - 3VA10 and 3VA11: 11 mm - 3VA12, 3VA13 and 3VA14: 8 mm

	BETWEEN DEVICES	TO GROUNDED PLATE				TO INSULATING MATERIAL			
	C	A	B	A	B	A	B	A	B
		3VA11 100,160A		3VA12 250A		3VA11 100,160A		3VA12 250A	
3VA11 & 12 up to 415VAC with/without RCD									
with/without short terminal cover	0	35	10	50	10	35	10	50	10
with short phase barriers	0	0	10	10	35	0	10	35	10
with long phase barriers	0	0	10	10	0	0	10	0	10
with long terminal cover	0	35	10	35	10	35	10	35	10

3VA13 & 14 up to 415VAC		**3VA13 400A**		**3VA14 630A**		**3VA13 400A**		**3VA14 630A**	
with/without short terminal cover	0	50	10	50	20	40	5	40	5
with short phase barriers	0	0	10	0	20	0	5	0	5
with long phase barriers	0	0	10	0	20	0	5	0	5
with long terminal cover	0	30	5	30	5	25	5	25	5

		TO GROUNDED PLATE						TO INSULATING MATERIAL					
3VA2 up to 415VAC		**3VA20,21,22 100, 160, 200A**		**3VA23 250, 400A**		**3VA23 400, 630A**		**3VA20,21,22 100, 160, 200A**		**3VA23 250, 400A**		**3VA23 400, 630A**	
with/without short terminal cover	0	40	5	50	10	50	20	30	5	40	5	40	5
with short phase barriers	0	0	5	0	10	0	20	0	5	0	5	0	5
with long phase barriers	0	0	5	0	10	0	20	0	5	0	5	0	5
with long terminal cover	0	25	5	30	5	30	5	25	5	25	5	25	5

		TO GROUNDED PLATE	
3VA2 up to 415VAC		**3VA25 630 800, 1000A**	
with short terminal cover	0	50	15

3VA 5SY BACK UP CHART

				UP STREAM BREAKER																		
				25kA / 36kA / 55kA / 70kA											36kA			55kA			55kA	
		Icu (kA)	In (A)	3VA11 (Frame Size 160A)											3VA12 (Frame Size 250)			3VA22 (Frame Size 250)			3VA23	
				16	20	25	32	40	50	63	80	100	125	160	160	200	250	160	200	250	400	
DOWN STREAM BREAKER	5SY6..-CC, 5SU9306 "C Curve"	6	0.5	25	25	25	25	25	25	25	25	25	25	25	25	25	25	25	25	25	20	
			1	25	25	25	25	25	25	25	25	25	25	25	25	25	25	25	25	25	20	
			2	25	25	25	25	25	25	25	25	25	25	25	25	25	25	25	25	25	20	
			4	25	25	25	25	25	25	25	25	25	25	25	25	25	25	25	25	25	20	
			6	25	25	25	25	25	25	25	25	25	25	25	25	25	25	25	25	25	20	
			10	25	25	25	25	25	25	25	25	25	25	25	25	25	25	25	25	25	20	
			16			25	25	25	25	25	25	25	25	25	25	25	25	25	25	25	20	
			20				35	35	35	35	35	35	35	35	25	25	25	25	25	25	20	
			25					35	35	35	35	35	35	35	25	25	25	25	25	25	20	
			32						35	35	35	35	35	35	25	25	25	25	25	25	20	
			40							15	15	15	15	15	25	25	25	25	25	25	20	
			50								15	15	15	15	25	25	25	25	25	25	20	
			63									15	15	15	25	25	25	25	25	25	20	
	5SY4..-CC, 5SU9304 "C Curve"	10	0.5	40	40	40	40	40	40	40	40	40	40	40	30	30	30	30	30	30	25	
			1	40	40	40	40	40	40	40	40	40	40	40	30	30	30	30	30	30	25	
			2	40	40	40	40	40	40	40	40	40	40	40	30	30	30	30	30	30	25	
			4	40	40	40	40	40	40	40	40	40	40	40	30	30	30	30	30	30	25	
			6	40	40	40	40	40	40	40	40	40	40	40	30	30	30	30	30	30	25	
			10	40	40	40	40	40	40	40	40	40	40	40	30	30	30	30	30	30	25	
			16			40	40	40	40	40	40	40	40	40	30	30	30	30	30	30	25	
			20				40	40	40	40	40	40	40	40	30	30	30	30	30	30	25	
			25					40	40	40	40	40	40	40	30	30	30	30	30	30	25	
			32						40	40	40	40	40	40	30	30	30	30	30	30	25	
			40							25	25	25	25	25	30	30	30	30	30	30	25	
			50								25	25	25	25	30	30	30	30	30	30	25	
			63									25	25	25	30	30	30	30	30	30	25	

Note: Independent of any Back-up value in this table, the maximum available current of the circuit where the upstream breaker is used may not exceed it's short circuit rating (Icu)

3VA SELECTIVITY CHART

				UP STREAM BREAKER																		
				25kA / 36kA / 55kA / 70kA											36kA			55kA			55kA	
		Icu (kA)	In (A)	3VA11 (Frame Size 160A)											3VA12 (Frame Size 250)			3VA22 (Frame Size 250)			3VA23	
				16	20	25	32	40	50	63	80	100	125	160	160	200	250	160	200	250	400	
DOWN STREAM BREAKER	5SY6..-CC, 5SU9306 "C Curve"	6	0.5	1.2	1.2	1.2	1.2	1.8	2.7	3.4	6.9	11	T	T	T	T	T	T	T	T	T	
			1	1.2	1.2	1.2	1.2	1.8	2.7	3.4	6.9	11	T	T	T	T	T	T	T	T	T	
			2	1.2	1.2	1.2	1.2	1.8	2.7	3.4	6.9	11	T	T	T	T	T	T	T	T	T	
			4	0.7	0.7	0.7	0.7	0.9	1.2	1.5	2.6	3.1	10	14	T	T	T	T	T	T	T	
			6	0.7	0.7	0.7	0.7	0.9	1.2	1.5	2.6	3.1	10	14	T	T	T	T	T	T	T	
			10	0.6	0.6	0.6	0.6	0.8	1	1.2	2.1	2.6	5.3	6.5	T	T	T	T	T	T	T	
			16			0.5	0.5	0.7	0.9	1.1	1.8	2.3	4.3	5.4	T	T	T	T	T	T	T	
			20				0.4	0.6	0.8	0.9	1.5	1.9	3.5	4.4	T	T	T	T	T	T	T	
			25					0.6	0.8	0.9	1.5	1.9	3.5	4.4	T	T	T	T	T	T	T	
			32						0.8	0.9	1.5	1.9	3.4	4.1	T	T	T	T	T	T	T	
			40							0.9	1.4	1.7	3.1	3.7	T	T	T	T	T	T	T	
			50								1.3	1.6	2.9	3.5	T	T	T	T	T	T	T	
			63									1.4	2.7	3.3	T	T	T	T	T	T	T	
	5SY4..-CC, 5SU9304 "C Curve"	10	0.5	1.2	1.2	1.2	1.2	1.8	2.7	3.4	6.9	11	T	T	T	T	T	T	T	T	T	
			1	1.2	1.2	1.2	1.2	1.8	2.7	3.4	6.9	11	T	T	T	T	T	T	T	T	T	
			2	1.2	1.2	1.2	1.2	1.8	2.7	3.4	6.9	11	T	T	T	T	T	T	T	T	T	
			4	0.7	0.7	0.7	0.7	0.9	1.2	1.5	2.6	3.1	10	14	T	T	T	T	T	T	T	
			6	0.7	0.7	0.7	0.7	0.9	1.2	1.5	2.6	3.1	10	14	T	T	T	T	T	T	T	
			10	0.6	0.6	0.6	0.6	0.8	1	1.2	2.1	2.6	5.3	6.5	T	T	T	T	T	T	T	
			16			0.5	0.5	0.7	0.9	1.1	1.8	2.3	4.3	5.4	T	T	T	T	T	T	T	
			20				0.4	0.6	0.8	0.9	1.5	1.9	3.5	4.4	T	T	T	T	T	T	T	
			25					0.6	0.8	0.9	1.5	1.9	3.5	4.4	T	T	T	T	T	T	T	
			32						0.8	0.9	1.5	1.9	3.4	4.1	T	T	T	T	T	T	T	
			40							0.9	1.4	1.7	3.1	3.7	T	T	T	T	T	T	T	
			50								1.3	1.6	2.9	3.5	12	14	T	T	T	T	T	
			63									1.4	2.7	3.3	12	14	T	T	T	T	T	

POWER METERS







PART NUMBER	DESCRIPTION
7KM2200-2EA30-1DA1	PAC2200, Measurement Via 1 A or 5 A CTs Modbus RTU Apparent /Active/Reactive Energy, Self-Powered
7KM2200-2EA30-1EA1	PAC2200, Measurement Via 1 A or 5 A CTs Modbus TCP Apparent /Active/Reactive Energy, Self-Powered
7KM3133-0BA00-3AA0	PAC3100, RS485 Comms, 2X Digital I/O Class 1 For Active Energy, Auxiliary supply 95-240VAC 50/60HZ / 110-340VDC
7KM3120-0BA01-1DA0	PAC3120, RS485 Comms, 2X Digital I/O Class 1 For Active Energy, Auxiliary supply 100-250VAC
7KM2112-0BA00-3AA0	PAC3200, Ethernet Modbus TCP Port, 2 Tarrif, Class 0.5S For Active Energy, Auxiliary supply 95-240VAC 50/60HZ / 110-340VDC +/- 10%
7KM2111-1BA00-3AA0	PAC3200, 2 x Ethernet Modbus TCP Port, 2 Tarrif, Class 0.5S For Active Energy, Auxiliary supply 22-65VDC
7KM3220-0BA01-1DA0	PAC3220, 2 x Ethernet Modbus TCP Port, 2 Tarrif, Class 0.5S For Active Energy, Auxiliary supply 95-240VAC 50/60HZ / 110-340VDC +/- 10%
7KM3220-1BA01-1EA0	PAC3220, Ethernet Modbus TCP Port, 2 Tarrif, Class 0.5S For Active Energy, Auxiliary supply 24-64VDC
7KM4212-0BA00-3AA0	PAC4200, Ethernet Modbus TCP Port, 2 Tarrif, Class 0.2S For Active Energy, Modbus Gateway, Clock/Calender, Aux supply 95-240VAC 50/60HZ / 110-340VDC
7KM5212-6BA00-1EA2	PAC5100, Ethernet Modbus TCP Port and web interface Class 0.2S For Active Energy Auxiliary supply 110-230VAC 50/60HZ / 24-250VDC
7KM5412-6BA00-1EA2	PAC5200, Ethernet Modbus TCP Port and web interface Class 0.2S For Active Energy Auxiliary supply 110-230VAC 50/60HZ / 24-250VDC

PART NUMBER	DESCRIPTION

Expansion modules for PAC Meters

7KM9300-0AB01-0AA0	Profibus
7KM9300-0AE01-0AA0	Profinet (will not work with PAC3200)
7KM9300-0AE02-0AA0	Profinet (for PAC3220 has 2 ports)
7KM9300-0AM00-0AA0	Modbus
7KM9200-0AB00-0AA0	Expansion module 4 DI / 2 DO

POWER METERS

SENTRON portfolio for power monitoring	PAC2200	PAC3120	PAC3220	PAC4200	PAC5100/5200
	The energy meter solution for DIN rail	The cost-effective solution for digital measurement	The specialist solution for precise energy measurement	The professional solution for communication and monitoring	The specialist solution for measured value recording
U, I, P, f,	x	x	x	x	x
Apparent | active | reactive energy | cos	x | x | x | –	x | x | x | x	x | x | x | x	x | x | x | x	x | x | x | x
Maximum input voltage L-L / L-N	480 V / 277 V	690 V / 276 V	690 V / 400 V	690 V / 400 V	690 V / 400 V galvanically separated
Current transformer connection | direct measuring	x | x (up to 65 A)	x | –	x | –	x | –	x | –
DI / DO	1/1	2/2	2/2 (10/6 with expansion Module)	2/2 (10/6 with expansion Module)	0/2
Integrated communication	Modbus TCP Modbus RTU M-Bus	Modbus RTU	Modbus TCP	Modbus TCP	Modbus TCP
Communication via expansion module	–	–	Modbus RTU PROFINET PROFIBUS	Modbus RTU PROFINET PROFIBUS	–
I(N), I(Diff)	–	–	with expansion module	with expansion module	–
Analog input	–	–	with expansion module	with expansion module	–
Load profile record	–	–	–	x	x
Software interfaces	Webinterface, powerconfig, powermanager	powerconfig, powermanager	Webinterface, SIMATIC Energy Suite, SIMATIC Energy Manager PRO, powerconfig, powermanager	Webinterface, SIMATIC Energy Suite, SIMATIC Energy Manager PRO, powerconfig, powermanager	Webinterface, powerconfig, powermanager
THD | Flicker, fault recorder,	– | –	x | –	x | –	x | –	x | x (5200)
Harmonics	–	–	–	1. ... 64.	2. ... 40.
Customizable display	–	–	x	x	x
Accuracy class active energy | reactive energy	1 | 1	0.5 | 2	0.5 S | 2	0.2 S | 2	0.5 S | 2
Dimensions WxHxD mm	90 x 108 x 64	96 x 96 x 56	96 x 96 x 56	96 x 96 x 82	96 x 96 x 100

DISCONNECTION SWITCHES 63-1600A (3KD)



Switch - no handle and operating mechanism on the left

PART NUMBER	RATED CURRENT	FRAME SIZE	DESCRIPTION
3KD2630-2ME10-0	63A	1	3 Pole Box Terminals (Terminal Covers Not Required)
3KD3030-0NE10-0	100A	2	3 Pole Lug Terminals
3KD3430-0NE10-0	160A	2	3 Pole Lug Terminals
3KD3630-0PE10-0	200A	3	3 Pole Lug Terminals
3KD3830-0PE10-0	250A	3	3 Pole Lug Terminals
3KD4030-0PE10-0	315A	3	3 Pole Lug Terminals
3KD4230-0PE10-0	400A	3	3 Pole Lug Terminals
3KD4430-0QE10-0	500A	4	3 Pole Lug Terminals
3KD4630-0QE10-0	630A	4	3 Pole Lug Terminals
3KD4830-0QE10-0	800A	4	3 Pole Lug Terminals
3KD5030-0RE10-0	1000A	5	3 Pole Lug Terminals
3KD5230-0RE10-0	1250A	5	3 Pole Lug Terminals
3KD5430-0RE10-0	1600A	5	3 Pole Lug Terminals
3KD5630-0RE10-0	2000A	5	3 Pole Lug Terminals



Handles - rotary door operating mechanisms, padlockable

8UD1171-2AF21	1/2	Door Handle Grey With 300mm Shaft
8UD1141-2AF21	3	Door Handle Grey With 300mm Shaft
8UD1151-3AF21	4	Door Handle Grey With 300mm Shaft
8UD1161-4AF21	5	Door Handle Grey With 300mm Shaft

Note: Red/Yellow handles available, change AF21 to AF25 in part number.



Handles - direct operating mechanisms

3KD9101-1	1	Direct Handle Grey
3KD9201-1	2	Direct Handle Grey
3KD9301-1	3	Direct Handle Grey
3KD9401-1	4	Direct Handle Grey
3KD9501-1	5	Direct Handle Grey

3KD ACCESSORIES



Auxiliary contacts

3KD9103-5	1/2	S1/2 AUX Switch Holder Up To 2 Switches
3KD9103-1	1/2	AUX Switch 1 C/O To Go With Holder (50cm cables)
3SU1400-1AA10-1FA0	3 to 5	Auxiliary contact 1 NO+1 NC (no holder required)

4th Pole

3KD9205-0	2	4TH Contact, Switchable Flat Terminal
3KD9205-2	2	4TH Contact, Switchable Box Terminal
3KD9305-0	3	4TH Contact, Switchable Flat Terminal
3KD9405-0	4	4TH Contact, Switchable Flat Terminal
3KD9505-0	5	4TH Contact, Switchable Flat Terminal



Terminal covers

3KD9204-6	2	Standard Cover 6 Pieces
3KD9304-6	3	Standard Cover 6 Pieces
3KD9404-6	4	Standard Cover 6 Pieces
3KD9504-6	5	Standard Cover 6 Pieces



Phase barriers

3KD9308-6	-	Phase Barrier Contains 6 Pieces
3KD9408-6	-	Phase Barrier Contains 6 Pieces
3KD9508-6	-	Phase Barrier Contains 6 Pieces

PANEL MOUNT AND ENCLOSED ISOLATING SWITCHES 16 TO 630A

PART NUMBER	AC21 RATING	AC23 RATING	DESCRIPTION

3 Pole panel mount switch with red / yellow handle



3LD3054-0TK53	16A	7.5kW	Front plate mounting with Central hole mounting 22.5mm
3LD3154-0TK53	25A	9.0kW	Front plate mounting with Central hole mounting 22.5mm
3LD3254-0TK53	32A	11.5kW	Front plate mounting with Central hole mounting 22.5mm
3LD3354-0TK53	40A	18.5kW	Front plate mounting with Central hole mounting 22.5mm
3LD3454-0TK53	63A	22.0kW	Front plate mounting with Central hole mounting 22.5mm
3LD2704-0TK53	100A	37.0kW	Front plate mounting with 4-hole mounting of the handle

4 Pole (3P + N) panel mount switch with red / yellow handle



3LD3054-0TL53	16A	7.5kW	Front plate mounting with Central hole mounting 22.5mm
3LD3154-0TL53	25A	9.0kW	Front plate mounting with Central hole mounting 22.5mm
3LD3254-0TL53	32A	11.5kW	Front plate mounting with Central hole mounting 22.5mm
3LD3354-0TL53	40A	18.5kW	Front plate mounting with Central hole mounting 22.5mm
3LD3454-0TL53	63A	22.0kW	Front plate mounting with Central hole mounting 22.5mm

Accessories



3LD9340-0B	-	-	Neutral switch leading contact for front mount 16 to 63A 3LD3
3LD9340-2B	-	-	Neutral terminal contact for front mount 16 to 63A 3LD3
3LD9340-3B	-	-	PE terminal contact for front mount 16 to 63A 3LD3
3LD9340-6B	-	-	1 NO + 1 NC Auxiliary contact for front mount 16 to 63A 3LD3
3LD9341-0A	-	-	Terminal cover for 3 pole 3LD3 16 to 63A
3LD9341-2A	-	-	Terminal cover for neutral terminal 3LD3 16 to 63A

- Degree of protection at front side IP65
- Including terminal cover for the infeed side
- Front plate 66 x 66 mm

3 Pole Enclosed polycarbonate isolating switches





KEM325U	25A	11kW	Enclosed polycarbonate isolating switch IP66 Black Handle
KEM325UY/R	25A	11kW	Enclosed polycarbonate isolating switch IP66 Yellow Front Red Handle
KEM340U	40A	22kW	Enclosed polycarbonate isolating switch IP66 Black Handle
KEM340UY/R	40A	22kW	Enclosed polycarbonate isolating switch IP66 Yellow Front Red Handle
KEM363U	63A	22kW	Enclosed polycarbonate isolating switch IP66 Black Handle
KEM363UY/R	63A	22kW	Enclosed polycarbonate isolating switch IP66 Yellow Front Red Handle
KEM380U	80A	30kW	Enclosed polycarbonate isolating switch IP66 Black Handle
KEM380UY/R	80A	30kW	Enclosed polycarbonate isolating switch IP66 Yellow Front Red Handle
KEM3125U	125A	55kW	Enclosed polycarbonate isolating switch IP66 Black Handle
KEM3125UY/R	125A	55kW	Enclosed polycarbonate isolating switch IP66 Yellow Front Red Handle
KEM3160	160A	90kW	Enclosed polycarbonate isolating switch IP65 Black Handle
KEM3160Y/R	160A	90kW	Enclosed polycarbonate isolating switch IP65 Yellow Front Red Handle
KEM3250	250A	132kW	Enclosed polycarbonate isolating switch IP65 Black Handle
KEM3250Y/R	250A	132kW	Enclosed polycarbonate isolating switch IP65 Yellow Front Red Handle
KEM3400	400A	200kW	Enclosed polycarbonate isolating switch IP65 Black Handle
KEM3400Y/R	400A	200kW	Enclosed polycarbonate isolating switch IP65 Yellow Front Red Handle
KEM3630	630A	355kW	Enclosed polycarbonate isolating switch IP65 Black Handle
KEM3630Y/R	630A	355kW	Enclosed polycarbonate isolating switch IP65 Yellow Front Red Handle

AUTOMATIC TRANSFER CONTROL DEVICES

SENTRON ATC3100



The 3KC ATC3100 transfer control device offers customers flexible and fast commissioning for implementing simple applications. The 3KC ATC3100 can be mounted in a control cabinet door, on a standard rail or on a rear panel without additional accessories. By default, the transfer control device supplied with a lockable safety cover (IP41). The connecting cable is pre-assembled to assist in fast cabling.
The 3KC ATC3100 can be configured without software and automatic changeover applications can be implemented with ease.

PART NUMBER	DESCRIPTION
3KC9000-8EL10	Controller - Note 24VDC power supply is needed
3KC9000-8EL62	1.8m Connecting cable

Note: The 3KC9000-8EL62 connecting cable is required with the 3KC9000-8EL10

SENTRON ATC6300



The SENTRON ATC6300 is ideally suited for low voltage power supplies thanks to its wide voltage range covering 100 to 480V. SENTRON ATC6300 allows the implementation of an automatic transfer control unit in conjunction with compact molded case circuit breakers MCCB, air circuit breakers ACB, switch disconnectors LBS, or contactors.
The 3KC ATC6300 can be integrated into a communication environment using expansion modules. For communication, the 3KC ATC6300 supports Modbus RTU, Modbus TCP as well as Modbus ASCII protocols via the optional RS 485 and Ethernet interfaces.
The 3KC ATC6300 offers the following metering functions:

- Phase sequence
- Phase failure
- Minimum / maximum voltage
- Minimum / maximum frequency
- Voltage unbalance

PART NUMBER	DESCRIPTION
3KC9000-8TL40	Controller 100 to 240 V AC, 45 ... 65 Hz

SENTRON ATC6500



The 3KC ATC6500 transfer control device can do everything the 3KC ATC6300 can.
The 3KC ATC6500 also offers the option of controlling an additional tie breaker (eg. 2 sources and a bustie)
It can be used to implement a wide range of applications with critical load management. Load shedding of non-critical loads can therefore be implemented.
The ATC6500 also features a permanently integrated RS 485 interface.
The 3KC ATC6300 offers the following metering functions:

PART NUMBER	DESCRIPTION
3KC9000-8TL50	Controller 100 to 240 V AC, 45 ... 65 Hz

ACCESSORIES for ATC6300 & 6500

3KC9000-8TL60	Expansion module 4 digital inputs
3KC9000-8TL63	Expansion module 2 relay outputs
3KC9000-8TL64	Expansion module 2 digital inputs and 2 relay outputs
3KC9000-8TL74	ATC6 RS 485 expansion module
3KC9000-8TL75	ATC6 Ethernet expansion module

BASIC TRANSFER SWITCHES, 3VA MCCBS

Two of 3VA MCCBs with motor operators pre-assembled and wired on a mounting plate complete with walking beam interlock.
Standard units include 230VAC operating motors and shunt trips, other voltage available on request.
3 Pole / 4 Pole units available on request.

IN CURRENT RATING	PART NUMBER 3 POLE / 3 POLE	PART NUMBER 4 POLE / 4 POLE
55kA Thermal Magnetic protection using 3VA1 MCCB		
63A	APSBTS3VA125EF6333	APSBTS3VA125EF6344
100A	APSBTS3VA125EF10033	APSBTS3VA125EF10044
160A	APSBTS3VA125EF16033	APSBTS3VA125EF16044
250A	APSBTS3VA125EF25033	APSBTS3VA125EF25044
320A	APSBTS3VA125EF25033	APSBTS3VA125EF25044
400A	APSBTS3VA125EF40033	APSBTS3VA125EF40044
630A	APSBTS3VA125EF63033	APSBTS3VA125EF63044
70kA Thermal Magnetic protection using 3VA1 MCCB		
63A	APSBTS3VA126EF6333	APSBTS3VA126EF6344
100A	APSBTS3VA126EF10033	APSBTS3VA126EF10044
160A	APSBTS3VA126EF16033	APSBTS3VA126EF16044
250A	APSBTS3VA126EF25033	APSBTS3VA126EF25044
315A	APSBTS3VA126EF25033	APSBTS3VA126EF25044
400A	APSBTS3VA126EF40033	APSBTS3VA126EF40044
630A	APSBTS3VA126EF63033	APSBTS3VA126EF63044

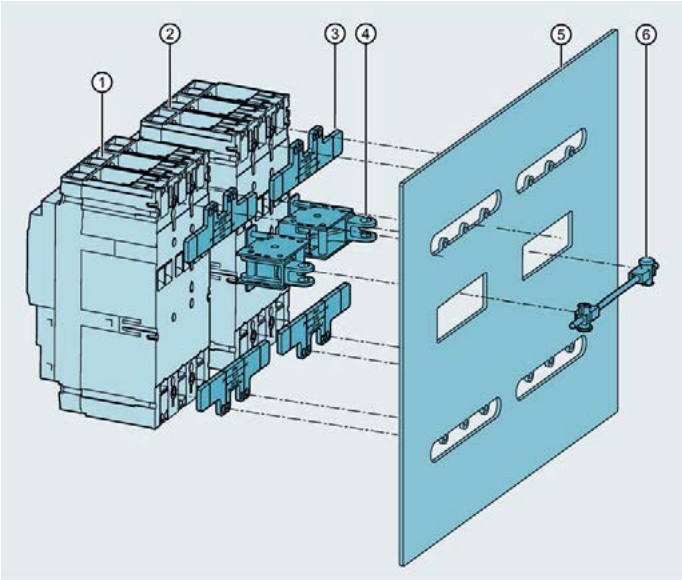

1	Molded case circuit breaker 1
2	Molded case circuit breaker 2
3	Mounting accessories
4	Interlocking modules
5	Panel mounting plate
6	Interlocking rod

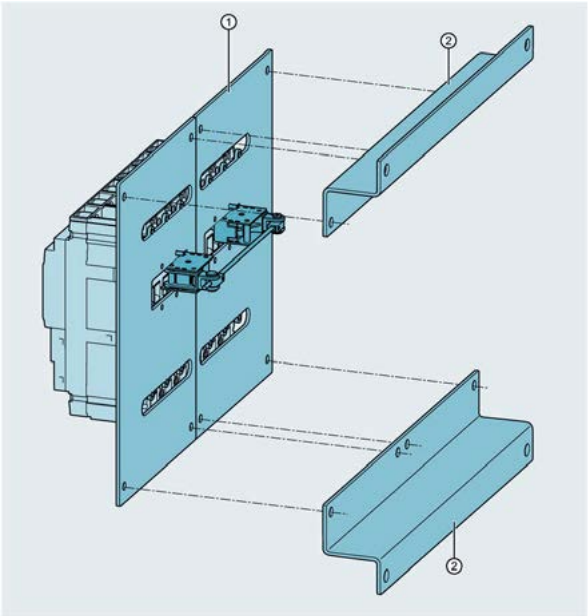

1	Mounting plates (specific to molded case circuit breaker)
2	Mounting rail

MANUAL TRANSFER SWITCHES 32-1600A (3KC)

RATED CURRENT	SIZE	PART NUMBER	PART NUMBER

Manual transfer switch - no handle



		3 POLE	4 POLE
32A	1	3KC0322-2ME00-0AA0	3KC0422-2ME00-0AA0
63A	1	3KC0326-2ME00-0AA0	3KC0426-2ME00-0AA0
80A	2	3KC0328-2NE00-0AA0	3KC0428-2NE00-0AA0
100A	2	3KC0330-2NE00-0AA0	3KC0430-2NE00-0AA0
160A	2	3KC0334-2NE00-0AA0	3KC0434-2NE00-0AA0
200A	3	3KC0336-0PE00-0AA0	3KC0436-0PE00-0AA0
250A	3	3KC0338-0PE00-0AA0	3KC0438-0PE00-0AA0
315A	3	3KC0340-0PE00-0AA0	3KC0440-0PE00-0AA0
400A	3	3KC0342-0PE00-0AA0	3KC0442-0PE00-0AA0
500A	4	3KC0344-0QE00-0AA0	3KC0444-0QE00-0AA0
630A	4	3KC0346-0QE00-0AA0	3KC0446-0QE00-0AA0
800A	4	3KC0348-0QE00-0AA0	3KC0448-0QE00-0AA0
1000A	5	3KC0350-0RE00-0AA0	3KC0450-0RE00-0AA0
1250A	5	3KC0352-0RE00-0AA0	3KC0452-0RE00-0AA0
1600A	5	3KC0354-0RE00-0AA0	3KC0454-0RE00-0AA0

ACCESSORIES

SIZE	PART NUMBER	DESCRIPTION

Direct mount handles



1/2	3KC9201-3	Size 1/2 Direct Operating Handle for 3KC
3	3KC9301-1	Size 3 Direct Operating Handle for 3KC
4	3KC9401-1	Size 4 Direct Operating Handle for 3KC
5	3KC9501-1	Size 5 Direct Operating Handle for 3KC

Door mount handle kits with 300mm shaft



1/2	8UD1131-2AE21	Size 1 & 2 Rotary Door Operating Handle
3	8UD1141-2AE21	Size 3 Rotary Door Operating Handle
4	8UD1151-3AE21	Size 4 Rotary Door Operating Handle
5	8UD1161-4AE21	Size 5 Rotary Door Operating Handle

Note: Red/Yellow handles available, change AE21 to AE25 in part number.

Auxiliary contacts



1/2	3KD9103-5	S1/2 Aux Switch holder up to 2 switches
1/2	3KD9103-1	Auxiliary Switch 1 C/O to go with holder (50cm Cables)
3-5	3SU1400-1AA10-1FA0	Auxiliary contact 1 NO+1 NC (no holder required)

Terminal covers



3	3KF9304-6	Standard Cover 6 Units for 3 Pole Switch
4	3KD9404-6	Standard Cover 6 Units for 3 Pole Switch
5	3KD9504-6	Standard Cover 6 Units for 3 Pole Switch
3	3KF9304-8	Standard Cover 8 Units for 4 Pole Switch
4	3KD9404-8	Standard Cover 8 Units for 4 Pole Switch
5	3KD9504-8	Standard Cover 8 Units for 4 Pole Switch

Bridging bars





1	3KC9118-1	Bridging Bar for Size 1 - 3 Pole
1	3KC9118-2	Bridging Bar for Size 1 - 4 Pole
2	3KC9218-1	Bridging Bar for Size 2 - 3 Pole
2	3KC9218-2	Bridging Bar for Size 2 - 4 Pole
3	3KC9318-0	Bridging Bar for Size 3, 1 Pole only (3 required for 3 Pole)
4	3KC9418-0	Bridging Bar for Size 4, 1 Pole only (3 required for 3 Pole)
5	3KC9518-0	Bridging Bar for Size 5, 1 Pole only (3 required for 3 Pole)

REMOTE/AUTOMATIC TRANSFER SWITCHES 40-3200A

Remote transfer switch (controller required)

- 3KC3 and 4 suitable for network to network, generator to generator, network to generator applications



CURRENT RATING	PART NUMBER (3 POLE)	PART NUMBER (4 POLE)
40A	-	3KC3424-2AA22-0AA3
63A	-	3KC3426-2AA22-0AA3
80A	-	3KC3428-2AA22-0AA3
100A	-	3KC3430-2AA22-0AA3
125A	-	3KC3432-2AA22-0AA3
160A	-	3KC3434-2AA22-0AA3
250A	3KC4338-0CA21-0AA3	3KC4438-0CA21-0AA3
400A	3KC4342-0DA21-0AA3	3KC4442-0DA21-0AA3
630A	3KC4346-0EA21-0AA3	3KC4446-0EA21-0AA3
800A	3KC4348-0FA21-0AA3	3KC4448-0FA21-0AA3
1000A	3KC4350-0FA21-0AA3	3KC4450-0FA21-0AA3
1250A	3KC4352-0GA21-0AA3	3KC4452-0GA21-0AA3
1600A	3KC4354-0HA21-0AA3	3KC4454-0HA21-0AA3
2000A	3KC4356-0JA21-0AA3	3KC4456-0JA21-0AA3
2500A	3KC4358-0JA21-0AA3	3KC4458-0JA21-0AA3
3200A	3KC4360-0JA21-0AA3	3KC4460-0JA21-0AA3

Automatic transfer switch (integrated controller)

- 3KC6 suitable for network to network applications only
- 3KC8 suitable for network to network and network to generator applications





40A	-	3KC6424-2TA20-0TA3
63A	-	3KC6426-2TA20-0TA3
80A	-	3KC6428-2TA20-0TA3
100A	-	3KC6430-2TA20-0TA3
125A	-	3KC6432-2TA20-0TA3
160A	-	3KC6434-2TA20-0TA3
250A	3KC8338-0CA22-0GA3	3KC8438-0CA22-0GA3
400A	3KC8342-0DA22-0GA3	3KC8442-0DA22-0GA3
630A	3KC8346-0EA22-0GA3	3KC8446-0EA22-0GA3
800A	3KC8348-0FA22-0GA3	3KC8448-0FA22-0GA3
1000A	3KC8350-0FA22-0GA3	3KC8450-0FA22-0GA3
1250A	3KC8352-0GA22-0GA3	3KC8452-0GA22-0GA3
16000A	3KC8354-0HA22-0GA3	3KC8454-0HA22-0GA3
2000A	3KC8356-0JA22-0GA3	3KC8456-0JA22-0GA3
2500A	3KC8358-0JA22-0GA3	3KC8458-0JA22-0GA3
3200A	3KC8360-0JA22-0GA3	3KC8460-0JA22-0GA3

Note: When using a 3 Pole transfer switch and there is no neutral available you require two autotransfomers for supply sensing and control voltage supply.

ACCESSORIES FOR AUTOMATIC TRANSFER SWITCHES - 3KC





Bridging bars

CURRENT RATING	PART NUMBER	DESCRIPTION
40 -125A	3KC9618-2	Bridging bar for 40 to 125A
160A	3KC9618-3	Bridging bar for 160A
250A	3KC9818-2	Bridging bar for 250A for 1 Pole
400A	3KC9818-3	Bridging bar for 400A for 1 Pole
630A	3KC9818-4	Bridging bar for 630A for 1 Pole
800 - 1000A	3KC9818-5	Bridging bar for 800 to 1000A for 1 Pole
1250A	3KC9818-6	Bridging bar for 1250A for 1 Pole
1600A	3KC9818-7	Bridging bar for 1600A for 1 Pole
2000 - 3000A	3KC9818-8	Bridging bar for 2000 to 3000A for 1 Pole

Power supply and voltage sensing cables

CURRENT RATING	PART NUMBER	PART NUMBER

For 3 Pole applications, with power supply

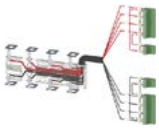

	Infeed from below	Infeed from above
250A	3KC9822-1	3KC9832-1
400A	3KC9822-2	3KC9832-2
630A	3KC9822-3	3KC9832-3
800 - 1000A	3KC9822-4	3KC9832-4
1250A	3KC9822-5	3KC9832-5
1600A	3KC9822-6	3KC9832-6
2000 - 3000A	3KC9822-7	3KC9832-7

For 4 Pole applications, with power supply



	Infeed from below	Infeed from above
250A	3KC9830-1	3KC9831-1
400A	3KC9830-2	3KC9831-2
630A	3KC9830-3	3KC9831-3
800 - 1000A	3KC9830-4	3KC9831-4
1250A	3KC9830-5	3KC9831-5
1600A	3KC9830-6	3KC9831-6
2000 - 3000A	3KC9830-7	3KC9831-7



CURRENT RATING	PART NUMBER	DESCRIPTION

Autotransformers

40 -160A	3KC9624-1	Suits 3KC3 and 3KC6, 400 V to 230 V Transformer for Control Power
250 - 3200A	3KC9824-1	Suits 3KC4 and 3KC8, 400 V to 230 V Transformer for Control Power

Dual power supply

40-3200A	3KC9625-1	Suits 3KC4 and 3KC8, dual power supply for 230VAC Control Power

External display

40-3200A	3KC9823-0	External Display for ATSE 250 - 3200A
40-3200A	3KC9823-2	Connection Cable

Auxiliary switches



40 - 160A	3KC9603-1	1 C/O for each for position 0, I, II
250 - 630A	3KC9803-1	Two leading C/O contact for position I, II
800 - 1600A	3KC9803-2	Two leading C/O contact for position I, II

Terminal covers



40 - 160A	3KC9604-2	4 Pole cover contains 2 units
250 - 400A	3KC9804-1	Cover contains 3 units one per Pole
630A	3KC9804-3	Cover contains 3 units one per Pole
250 - 400A	3KC9804-2	Cover contains 4 units one per Pole
630A	3KC9804-4	Cover contains 4 units one per Pole

AIR CIRCUIT BREAKERS - 3WL

RATED CURRENT	PART NUMBER	DESCRIPTION	PROTECTION	POLES

3WL ACBs 3 Pole withdrawable

Includes guide frame, shutters and door seal



800A	3WL1108-2CB36-1AA2-Z R21+T40	55KA Horizontal Con.	LSI	3
1000A	3WL1110-2CB36-1AA2-Z R21+T40	55KA Horizontal Con.	LSI	3
1250A	3WL1112-2CB36-1AA2-Z R21+T40	55KA Horizontal Con.	LSI	3
1600A	3WL1116-2CB36-1AA2-Z R21+T40	55KA Horizontal Con.	LSI	3
2000A	3WL1220-2CB36-1AA2-Z R21+T40	66KA Horizontal Con.	LSI	3
2500A	3WL1225-2CB36-1AA2-Z R21+T40	66KA Horizontal Con.	LSI	3

Position	1	2	3	4	5	6	7	8	9	10	11	12	13	14	15	16	-	Z
Part Number	3	W	L	1	_	_	_	_	_	_	_	_	_	_	_	_	_	_

Part Number Explanation eg. 3WL1116-2CB36-1AA2-Z=R21+T40

3WL1 = ACB Range (position 1-4)
1 = Frame Size 1 (position 5)
16 = 1600 amps (position 6-7)
2 = 55/66kA (position 8)
CB = ETU25B-LSI (position 9-10)
3 = Number Of Poles (position 11)
6 = Horizontal Busbar Connections (position 12)
1 = Manual Operating Mechanism (position 13)
A = No Shunt Trip (position 14)
A = No Shunt/UV Trip (position 15)
2 = 2 NO 2 NC Auxilliary (position 16)
R21 = Shutters (Z option)
T40 = Door Seal (Z option)

Retro Fit Kits to replace any existing ACBs with 3WL ACBs

- The complete Siemens withdrawable ACB is installed inside the existing sub-chassis by means of a cradle.
- This fixes to holes already in the sub-chassis.
- The connection between the terminal tag on the ACB and the connection stabs in the existing sub-chassis are made by extension bars.
- The extension bars have the plug-in contacts built into them.
- The cradle and extension bars form the major part of the kit. All other items, such as hard-ware, are also provided.



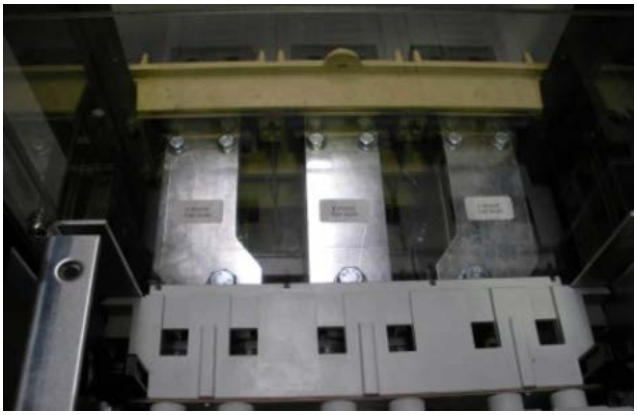

FUSE SWITCHES SURFACE MOUNT 32-800A (3KF)

PART NUMBER	RATED CURRENT	FRAME SIZE	DESCRIPTION

3 Pole fuse switch with no handle - for DIN fuses



3KF1303-0LB11	32A	1	DIN Fuse Size 000, Box Terminals
3KF1306-0LB11	63A	1	DIN Fuse Size 000, Box Terminals
3KF1308-0LB11	80A	1	DIN Fuse Size 000, Box Terminals
3KF2312-0LF11	125A	2	DIN Fuse Size 000 & 00, Flat Terminals
3KF2316-0LF11	160A	2	DIN Fuse Size 000 & 00, Flat Terminals
3KF3325-0LF11	250A	3	DIN Fuse Size 0 & 1, Flat Terminals
3KF4340-0LF11	400A	4	DIN Fuse Size 1 & 2, Flat Terminals
3KF5363-0LF11	630A	5	DIN Fuse Size 2 & 3, Flat Terminals
3KF5380-0LF11	800A	5	DIN Fuse Size 2 & 3, Flat Terminals

4 Pole fuse switch with no handle - for DIN fuses



3KF1403-0LB11	32A	1	DIN Fuse Size 000, Box Terminals
3KF1406-0LB11	63A	1	DIN Fuse Size 000, Box Terminals
3KF1408-0LB11	80A	1	DIN Fuse Size 000, Box Terminals
3KF2412-0LF11	125A	2	DIN Fuse Size 000 & 00, Flat Terminals
3KF2416-0LF11	160A	2	DIN Fuse Size 000 & 00, Flat Terminals
3KF3425-0LF11	250A	3	DIN Fuse Size 0 & 1, Flat Terminals
3KF4440-0LF11	400A	4	DIN Fuse Size 1 & 2, Flat Terminals
3KF5463-0LF11	630A	5	DIN Fuse Size 2 & 3, Flat Terminals
3KF5480-0LF11	800A	5	DIN Fuse Size 2 & 3, Flat Terminals

PART NUMBER	FRAME SIZE	DESCRIPTION

4th contact element



3KF9105-2AA00	1	4TH Contact Element, Switchable for Fuse 000, Box Terminals
3KF9106-8AA00	1	N/PE Terminal, Pemanent Jumper Box Terminals
3KF9205-0AA00	2	4TH Contact Element, Switchable for Fuse 000 & 00, Flat Terminals
3KF9206-7AA00	2	N/PE Terminal, Pemanent Jumper Flat Terminals
3KF9305-0AA00	3	4TH Contact Element, Switchable for Fuse 0 & 1, Flat Terminals
3KF9306-7AA00	3	N/PE Terminal, Pemanent Jumper Flat Terminals
3KF9405-0AA00	4	4TH Contact Element, Switchable for Fuse 1 & 2, Flat Terminals
3KF9406-7AA00	4	N/PE Terminal, Pemanent Jumper Flat Terminals
3KF9505-0AA00	5	4TH Contact Element, Switchable for Fuse 2 & 3, Flat Terminals
3KF9506-7AA00	5	N/PE Terminal, Pemanent Jumper Flat Terminals

Note: Does not include fuses.

ACCESSORIES - 3KF

PART NUMBER	FRAME SIZE	DESCRIPTION

Direct mount handles

3KF9101-1AA00	1	Direct Operating Handle for 3KF1
3KF9201-1AA00	2	Direct Operating Handle for 3KF2
3KF9301-1AA00	3	Direct Operating Handle for 3KF3
3KF9401-1AA00	4	Direct Operating Handle for 3KF4
3KF9501-1AA00	5	Direct Operating Handle for 3KF5

Door mount handle kits with 300mm shaft



8UD1171-2AF21	1	Rotary Door Operating Handle for 3KF1
8UD1141-2AF21	2	Rotary Door Operating Handle for 3KF2
8UD1141-3AF21	3	Rotary Door Operating Handle for 3KF3
8UD1151-3AF21	4	Rotary Door Operating Handle for 3KF4
8UD1161-4AF21	5	Rotary Door Operating Handle for 3KF5

Note: Red/Yellow handles available, change AF21 to AF25 in part number.

Auxiliary contacts



3KD9103-5	1	S1/2 AUX Switch Holder Up To 2 Switches
3KD9103-1	1	AUX Switch 1 C/O To Go With Holder (50cm cables)
3SU1400-1AA10-1FA0	2-5	Auxiliary contact 1 NO+1 NC (no holder required)

Terminal covers



3KD9304-6	2	Standard Cover 6 Units for 3 Pole Switch
3KF9304-6	3	Standard Cover 6 Units for 3 Pole Switch
3KD9404-6	4	Standard Cover 6 Units for 3 Pole Switch
3KD9504-6	5	Standard Cover 6 Units for 3 Pole Switch
3KD9304-8	2	Standard Cover 8 Units for 4 Pole Switch
3KF9304-8	3	Standard Cover 8 Units for 4 Pole Switch
3KD9404-8	4	Standard Cover 8 Units for 4 Pole Switch
3KD9504-8	5	Standard Cover 8 Units for 4 Pole Switch

FUSE HOLDERS AND FUSES

PART NUMBER	In	DESCRIPTION

Cylindrical fuse holders DIN rail mount



3NW7013	32A	Single Pole 32A to take 10x38mm Cylindrical fuse
3NW7033	32A	Three Pole 32A to take 10x38mm Cylindrical fuse
3NW7063	32A	Three Pole and Neutral 32A to take 10x38mm Cylindrical fuse

Cylindrical fuse links, operational class gG



3NW6011-1	1A	Cylindrical fuse link, 10 x 38 mm, 1 A, gG, Un AC: 500 V
3NW6002-1	2A	Cylindrical fuse link, 10 x 38 mm, 2 A, gG, Un AC: 500 V
3NW6004-1	4A	Cylindrical fuse link, 10 x 38 mm, 4 A, gG, Un AC: 500 V
3NW6001-1	6A	Cylindrical fuse link, 10 x 38 mm, 6 A, gG, Un AC: 500 V
3NW6003-1	10A	Cylindrical fuse link, 10 x 38 mm, 10 A, gG, Un AC: 500 V
3NW6005-1	16A	Cylindrical fuse link, 10 x 38 mm, 16 A, gG, Un AC: 500 V
3NW6007-1	20A	Cylindrical fuse link, 10 x 38 mm, 20 A, gG, Un AC: 500 V
3NW6010-1	25A	Cylindrical fuse link, 10 x 38 mm, 25 A, gG, Un AC: 500 V
3NW6012-1	32A	Cylindrical fuse link, 10 x 38 mm, 32 A, gG, Un AC: 400 V

3NP Fuse Disconnects for DIN Style Fuses



3NP1123-1CA20	160A	Surface Mount, Fuse Size 000, Box Terminals
3NP1133-1BC10	160A	60mm Bus Bar Mount, Fuse Size 00, Flat Terminals
3NP1133-1CA10	160A	Surface Mount, Fuse Size 00, Flat Terminals
3NP1143-1BC10	250A	60mm Bus Bar Mount, Fuse Size 1, Flat Terminals
3NP1143-1DA10	250A	Surface Mount, Fuse Size 1, Flat Terminals
3NP1153-1BC10	400A	60mm Bus Bar Mount, Fuse Size 2, Flat Terminals
3NP1153-1DA10	400A	Surface Mount, Fuse Size 2, Flat Terminals
3NP1163-1DA10	630A	Surface Mount, Fuse Size 3, Flat Terminals

DIN Fuses with front indicator, operational class gG (for cable and line protection)





3NA3802	2A	DIN fuse link Size 000 500VAC/250VDC
3NA3804	4A	DIN fuse link Size 000 500VAC/250VDC
3NA3801	6A	DIN fuse link Size 000 500VAC/250VDC
3NA3803	10A	DIN fuse link Size 000 500VAC/250VDC
3NA3805	16A	DIN fuse link Size 000 500VAC/250VDC
3NA3807	20A	DIN fuse link Size 000 500VAC/250VDC
3NA3810	25A	DIN fuse link Size 000 500VAC/250VDC
3NA3812	32A	DIN fuse link Size 000 500VAC/250VDC
3NA3814	35A	DIN fuse link Size 000 500VAC/250VDC
3NA3817	40A	DIN fuse link Size 000 500VAC/250VDC
3NA3820	50A	DIN fuse link Size 000 500VAC/250VDC
3NA3822	63A	DIN fuse link Size 000 500VAC/250VDC
3NA3824	80A	DIN fuse link Size 000 500VAC/250VDC
3NA3830	100A	DIN fuse link Size 000 500VAC/250VDC
3NA3832	125A	DIN fuse link Size 00 500VAC/250VDC
3NA3836	160A	DIN fuse link Size 00 500VAC/250VDC
3NA3030	100A	DIN fuse link Size 0 500VAC/400VDC
3NA3032	125A	DIN fuse link Size 0 500VAC/400VDC
3NA3036	160A	DIN fuse link Size 0 500VAC/400VDC
3NA3140	200A	DIN fuse link Size 1 500VAC/400VDC
3NA3144	250A	DIN fuse link Size 1 500VAC/400VDC
3NA3250	300A	DIN fuse link Size 2 500VAC/400VDC
3NA3252	315A	DIN fuse link Size 2 500VAC/400VDC
3NA3254	355A	DIN fuse link Size 2 500VAC/400VDC
3NA3260	400A	DIN fuse link Size 2 500VAC/400VDC
3NA3362	425A	DIN fuse link Size 3 500VAC/400VDC
3NA3365	500A	DIN fuse link Size 3 500VAC/400VDC
3NA3372	630A	DIN fuse link Size 3 500VAC/400VDC

Supplied in packs of 3 - Price per 1 fuse



SIEMENS

CONTACTORS UP TO 450KW



KW	CURRENT A (AC3)	AUXILIARY CONTACTS	PART NUMBER AC CONTROL	PART NUMBER 24VDC CONTROL
Size 00				
3	7	1NO	3RT2015-1A*01	3RT2015-1BB41
4	9	1NO	3RT2016-1A*01	3RT2016-1BB41
5.5	12	1NO	3RT2017-1A*01	3RT2017-1BB41
7.5	16	1NO	3RT2018-1A*01	3RT2018-1BB41

Note: 1NC available, change last digit from 1 to 2.



Size 0				
4	9	1NO+1NC	3RT2023-1A*00	3RT2023-1BB40
5.5	12	1NO+1NC	3RT2024-1A*00	3RT2024-1BB40
7.5	16	1NO+1NC	3RT2025-1A*00	3RT2025-1BB40
11	25	1NO+1NC	3RT2026-1A*00	3RT2026-1BB40
15	32	1NO+1NC	3RT2027-1A*00	3RT2027-1BB40
18.5	38	1NO+1NC	3RT2028-1A*00	3RT2028-1BB40
Size 2				
18.5	40	1NO+1NC	3RT2035-1A*00	3RT2035-1NB30
22	51	1NO+1NC	3RT2036-1A*00	3RT2036-1NB30
30	65	1NO+1NC	3RT2037-1A*00	3RT2037-1NB30
37	80	1NO+1NC	3RT2038-1A*00	3RT2038-1NB30
Size 3				
37	80	1NO+1NC	3RT2045-1A*00	3RT2045-1NB30
45	95	1NO+1NC	3RT2046-1A*00	3RT2046-1NB30
55	110	1NO+1NC	3RT2047-1A*00	3RT2047-1NB30



Replace * with: B = 24VAC F=110VAC P=230VAC ** NB = 24VAC/DC



KW	CURRENT A (AC3)	AUXILIARY CONTACTS	PART NUMBER
Size S6			**AC/DC CONTROL**
55	115	2NO + 2NC	3RT1054-6A*36
75	150	2NO + 2NC	3RT1055-6A*36
90	185	2NO + 2NC	3RT1056-6A*36
Size S10			
110	225	2NO + 2NC	3RT1064-6A*36
132	265	2NO + 2NC	3RT1065-6A*36
160	300	2NO + 2NC	3RT1066-6A*36
Size S12			
200	400	2NO + 2NC	3RT1075-6A*36
250	500	2NO + 2NC	3RT1076-6A*36

Replace * with: B = 24VAC/DC F=110VAC/DC P=230VAC/DC

Vacuum contactors 3TF68 & 69



			AC CONTROL
335	630	4NO + 4NC	3TF6844-0C*7
450	820	4NO + 4NC	3TF6944-0C*7

Replace * with: F=110VAC P=230VAC

CONTACTOR ACCESSORIES - 3RT2



Front mount auxiliary contact blocks S00, S0, S2 & S3 (3RT201, 202 , 203 & 204)

PART NUMBER	DESCRIPTION	AUXILIARY CONTACTS
3RH2911-1HA11	Front mount with screw terminals	1N/O + 1N/C
3RH2911-1HA22	Front mount with screw terminals	2N/O + 2N/C
3RH2911-1HA13	Front mount with screw terminals	1N/O + 3N/C
3RH2911-1HA31	Front mount with screw terminals	3N/O + 1N/C
3RH2911-1FA40	Front mount with screw terminals	4N/O
3RH2911-1AA10	Front mount with top connection	1N/O
3RH2911-1AA01	Front mount with top connection	1N/C



Side mount auxiliary contact blocks S00 (3RT201)

3RH2911-1DA02	Screw terminals, Right or Left side	2N/C
3RH2911-1DA11	Screw terminals, Right or Left side	1N/O + 1N/C
3RH2911-1DA20	Screw terminals, Right or Left side	2N/O

Side mount auxiliary contact blocks S0, S2 & S3 (3RT202 , 203 & 204)

3RH2921-1DA02	Screw terminals, Right or Left side	2N/C
3RH2921-1DA11	Screw terminals, Right or Left side	1N/O + 1N/C
3RH2921-1DA20	Screw terminals, Right or Left side	2N/O

Note: To fit side mount auxiliaries to a Size 2 (3RT203) the auxiliary contact block must be Version E03 or greater.



Varistors

PART NUMBER	DESCRIPTION	VOLTAGE RANGE	
Size 00		**VAC**	**VDC**
3RT2916-1BB00	Varistor for 3RT2015 to 3RT2018	24...48	24...70
3RT2916-1BD00	Varistor for 3RT2015 to 3RT2018	127...240	150...250
Size 0			
3RT2926-1BB00	Varistor for 3RT2024 to 3RT2028	24...48	24...70
3RT2926-1BC00	Varistor for 3RT2024 to 3RT2028	48...127	70...150
3RT2926-1BD00	Varistor for 3RT2024 to 3RT2028	127...240	150...240
3RT2926-1BE00	Varistor for 3RT2024 to 3RT2028	240...400	
Size 2 & 3			
3RT2936-1BB00	Varistor for 3RT2035 to 3RT2038	24...48	24...70
3RT2936-1BC00	Varistor for 3RT2035 to 3RT2038	48...127	70...150
3RT2936-1BD00	Varistor for 3RT2035 to 3RT2038	127...240	150...240
3RT2936-1BE00	Varistor for 3RT2035 to 3RT2038	240...400	-



Reversing kits (includes mechanical interlocks, top & bottom wiring modules)

3RA2913-2AA1	Size 00 3TR201 Reversing assembly kit
3RA2923-2AA1	Size 0 3TR202 Reversing assembly kit
3RA2933-2AA1*	Size 2 3TR203 Reversing assembly kit
3RA2943-2AA1*	Size 3 3TR204 Reversing assembly kit

*Mechanical interlock not included S2 & 3 (3RA2934-2B)



Mechanical interlocks

3RA2912-2H	Size 00 Mechanical Interlock & Connecting Clips
3RA2922-2H	Size 0 Mechanical Interlock & Connecting Clips
3RA2934-2B	Size 2 & 3 Mechanical Interlock
3RA2932-2D	Size 2 & 3 Connecting Clips (required with 3RA2934-2B)
3RA1954-2A	Size 6,10 & 12 Lateral mounting for contactors 3RT105 to 3RT107



Terminal covers for box terminals (2 required per device)

3RT1956-4EA2	To suit Size 6 Contactor
3RT1966-4EA2	To suit Size 10 and 12 Contactors



Terminal covers for cable lugs & busbar (2 required per device)

3RT1956-4EA1	To suit Size 6 Contactor
3RT1966-4EA1	To suit Size 10 and 12 Contactors

SAFETY CONTACTORS UP TO 250KW

KW	CURRENT A (AC3)	AUXILIARY CONTACTS	PART NUMBER 230VAC CONTROL	PART NUMBER 24VDC CONTROL
Size 00				
3	7	2NO+2NC	3RT2015-1CP04-3MA0	3RT2015-1FB44-3MA0
4	9	2NO+2NC	3RT2016-1CP04-3MA0	3RT2016-1FB44-3MA0
5.5	12	2NO+2NC	3RT2017-1CP04-3MA0	3RT2017-1FB44-3MA0
7.5	16	2NO+2NC	3RT2018-1CP04-3MA0	3RT2018-1FB44-3MA0
Size 0				
5.5	12	2NO+2NC	3RT2024-1CL24-3MA0	3RT2024-1FB44-3MA0
7.5	16	2NO+2NC	3RT2025-1CL24-3MA0	3RT2025-1FB44-3MA0
11	25	2NO+2NC	3RT2026-1CL24-3MA0	3RT2026-1FB44-3MA0
15	32	2NO+2NC	3RT2027-1CL24-3MA0	3RT2027-1FB44-3MA0
18.5	38	2NO+2NC	3RT2028-1CL24-3MA0	3RT2028-1FB44-3MA0
Size 2				
22	51	2NO+2NC	3RT2036-1CL24-3MA0	3RT2036-1NB34-3MA0
30	65	2NO+2NC	3RT2037-1CL24-3MA0	3RT2037-1NB34-3MA0
37	80	2NO+2NC	3RT2038-1CL24-3MA0	3RT2038-1NB34-3MA0
Size 3				
37	80	2NO+2NC	3RT2045-1CP04-3MA0	3RT2045-1NB34-3MA0
45	95	2NO+2NC	3RT2046-1CL24-3MA0	3RT2046-1NB34-3MA0
55	110	2NO+2NC	3RT2047-1CL24-3MA0	3RT2047-1NB34-3MA0
Size 6				230VAC required to coil with 24VDC control
75	150	2NO+2NC	3RT1055-6AP36-3PA0	3RT1055-6SP36-3PA0
90	185	2NO+2NC	3RT1056-6AP36-3PA0	3RT1056-6SP36-3PA0
Size 10				
110	225	2NO+2NC	3RT1064-6AP36-3PA0	3RT1064-6SP36-3PA0
132	265	2NO+2NC	3RT1065-6AP36-3PA0	3RT1065-6SP36-3PA0
160	300	2NO+2NC	3RT1066-6AP36-3PA0	3RT1066-6SP36-3PA0
Size 12				
200	400	2NO+2NC	3RT1075-6AP36-3PA0	3RT1075-6SP36-3PA0
250	500	2NO+2NC	3RT1076-6AP36-3PA0	3RT1076-6SP36-3PA0





Note: All contactors have surge supression on the coils.

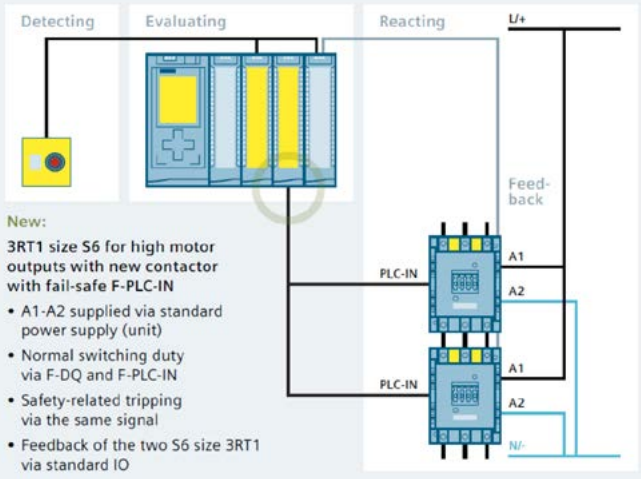

MOTOR CIRCUIT BREAKERS - 3RV20 THERMAL MAGNETIC

Thermal magnetic class 10



Size 00

PART NUMBER	KW	RATED CURRENT IN (A)	OVERLOAD SETTING (A)	INSTANTANEOUS RATING (A)	KA RATING
3RV2011-0AA10	0.04	0.2	0.11 -0.16	2.1	100
3RV2011-0BA10	0.06	0.2	0.14 – 0.2	2.6	100
3RV2011-0CA10	0.06	0.3	0.18 – 0.25	3.3	100
3RV2011-0DA10	0.09	0.3	0.22 – 0.32	4.2	100
3RV2011-0EA10	0.09	0.4	0.28 – 0.4	5.2	100
3RV2011-0FA10	0.12	0.5	0.35 – 0.5	6.5	100
3RV2011-0GA10	0.18	0.6	0.45 – 0.63	8.2	100
3RV2011-0HA10	0.18	0.8	0.55 – 0.8	10	100
3RV2011-0JA10	0.25	1	0.7 – 1	13	100
3RV2011-0KA10	0.37	1.3	0.9 – 1.25	16	100
3RV2011-1AA10	0.55	1.6	1.1 – 1.6	21	100
3RV2011-1BA10	0.75	2	1.4 – 2	26	100
3RV2011-1CA10	0.75	2.5	1.8 – 2.5	33	100
3RV2011-1DA10	1.1	3.2	2.2 – 3.2	42	100
3RV2011-1EA10	1.5	4	2.8 – 4	52	100
3RV2011-1FA10	1.5	5	3.5 – 5	65	100
3RV2011-1GA10	2.2	6.3	4.5 – 6.3	82	100
3RV2011-1HA10	3	8	5.5 – 8	104	100
3RV2011-1JA10	4	10	7 – 10	130	100
3RV2011-1KA10	5.5	12.5	9 – 12.5	163	100
3RV2011-4AA10	7.5	16	11 – 16	208	50



Size 0

3RV2021-4AA10	7.5	16	11 – 16	208	50
3RV2021-4BA10	7.5	20	14 - 20	260	50
3RV2021-4CA10	11	22	17 - 22	286	50
3RV2021-4DA10	11	25	20 - 25	325	50
3RV2021-4NA10	15	28	23 - 28	364	50
3RV2021-4EA10	15	32	27 - 32	400	50
3RV2021-4PA10	18.5	36	30 - 36	432	50
3RV2021-4FA10	18.5	40	34 - 40	480	50



Size 2

3RV2031-4PA10	18.5	36	28 - 36	520	65
3RV2031-4UA10	18.5	40	32 - 40	585	65
3RV2031-4VA10	22	45	35 - 45	650	65
3RV2031-4WA10	22	52	42 - 52	741	65
3RV2031-4XA10	30	59	49 - 59	845	65
3RV2031-4JA10	30	65	54 - 65	845	65
3RV2031-4KA10	37	73	62 - 73	949	65

Size 3

3RV2041-4KA10	37	75	57 - 75	975	65
3RV2041-4RA10	45	84	65 - 84	1170	65
3RV2041-4YA10	45	93	75 - 93	1300	65
3RV2041-4MA10	45/55	100	80 - 100	1300	65
3RV2041-4MA10	45/55	100	80 - 100	1300	65

Note: Also available with spring type terminals

MOTOR CIRCUIT BREAKERS - 3RV23 MAGNETIC ONLY

Magnetic only for starter combinations



Size 00

PART NUMBER	KW	RATED CURRENT (In)	INSTANTANEOUS RATING (A)	KA RATING
3RV2311-0JC10	0.3	1	13	100
3RV2311-0KC10	0.4	1.3	16	100
3RV2311-1AC10	0.6	1.6	21	100
3RV2311-1BC10	0.8	2	26	100
3RV2311-1CC10	0.8	2.5	33	100
3RV2311-1DC10	1.1	3.2	42	100
3RV2311-1EC10	1.5	4	52	100
3RV2311-1FC10	1.5	5	65	100
3RV2311-1GC10	2.2	6.3	82	100
3RV2311-1HC10	3	8	104	100
3RV2311-1JC10	4	10	130	100
3RV2311-1KC10	5.5	12.5	163	100
3RV2311-4AC10	7.5	16	208	55



Size 0

3RV2321-4BC10	7.5	20	260	55
3RV2321-4CC10	11	22	286	55
3RV2321-4DC10	11	25	325	55
3RV2321-4NC10	15	28	364	55
3RV2321-4EC10	15	32	400	55
3RV2321-4PC10	18.5	36	432	20
3RV2321-4FC10	18.5	40	480	20



Size 2

3RV2331-4UC10	18.5	40	585	65
3RV2331-4VC10	22	45	650	65
3RV2331-4WC10	22	52	741	65

Size 3

3RV2341-4KC10	37	75	975	65
3RV2341-4RC10	45	84	1170	65
3RV2341-4YC10	45	93	1300	65
3RV2341-4MC10	45/55	100	1300	65

Note: Also available with spring type terminals

MOTOR CIRCUIT BREAKERS WITH INCREASED SWITCHING CAPACITY - 3RV

PART NUMBER	KW	RATED CURRENT (In)	OVERLOAD SETTING (A)	INSTANTANEOUS RATING	KA RATING

Thermal magnetic class 10



Size S2, with increased switching capacity

3RV2032-4EA10	15	32	22 - 32	416	100
3RV2032-4PA10	18.5	36	28 - 36	520	100
3RV2032-4UA10	18.5	40	32 - 40	585	100
3RV2032-4VA10	22	45	35 - 45	650	100
3RV2032-4WA10	22	52	42 - 52	741	100
3RV2032-4XA10	30	59	49 - 59	845	100
3RV2032-4JA10	30	65	54 - 65	845	100
3RV2032-4KA10	37	73	62 - 73	949	100

Size S3, with increased switching capacity

3RV2042-4FB10	19	40	28 - 40	520	100
3RV2042-4HB10	22	50	36 - 50	650	100
3RV2042-4JB10	30	63	45 - 63	819	100
3RV2042-4KB10	37	75	57 - 75	975	100
3RV2042-4RB10	45	84	65 - 84	1170	100
3RV2042-4YB10	45	93	75 - 93	1300	100
3RV2042-4MB10	45/55	100	80 - 100	1300	100

Magnetic only



Size 2, with increased switching capacity

3RV2332-4SC10	5.5	14	Without	208	100
3RV2332-4TC10	7.5	17	Without	260	100
3RV2332-4BC10	7.5	20	Without	260	100
3RV2332-4DC10	11	25	Without	325	100
3RV2332-4EC10	15	32	Without	416	100
3RV2332-4PC10	18.5	36	Without	520	100
3RV2332-4UC10	18.5	40	Without	585	100

Size S3, with increased switching capacity

3RV2342-4FC10	18.5	40	Without	520	100
3RV2342-4HC10	22	50	Without	650	100
3RV2342-4JC10	30	63	Without	819	100
3RV2342-4KC10	37	75	Without	975	100
3RV2342-4RC10	45	84	Without	1170	100
3RV2342-4YC10	45	93	Without	1300	100
3RV2342-4MC10	45/55	100	Without	1300	100

MOTOR CIRCUIT BREAKERS ACCESSORIES

PART NUMBER	DESCRIPTION

3RV2 accessories to suit size 00 to 3



3RV2901-1E	Transverse (Front Mount) Auxiliary Switch 1NO+1NC
3RV2901-1A	Lateral (Side Mount) Auxiliary Switch 1NO+1NC
3RV2921-1M	Alarm (separate tripped & short circuit) 1NO+1NC
3RV2902-1DB0	Shunt Release 24V AC/DC
3RV2902-1DP0	Shunt Release 230VAC
3RV2902-1AB4	Under Voltage Release 24VDC
3RV2902-1AP0	Under Voltage Release 230VAC
3RV2902-1AV0	Under Voltage Release 400V

Door coupling rotary handles suits 3RV2



Normal Duty

3RV2926-0B	Normal Duty (130mm shaft), Size 00 to 3
3RV2926-0K	Normal Duty (330mm shaft), Size 00 to 3



Heavy Duty (does not indicate trip position on handle)

3RV2926-2B	Heavy Duty Size S00 & S0
3RV2936-2B	Heavy Duty Size S2
3RV2946-2B	Heavy Duty Size S3

Link module suits 3RV2 MSP to 3RT2 contactor



3RA1921-1DA00	Between S00 3RT2 Contactor (AC/DC Coil) & S00/0 3RV2 MSP
3RA2921-1AA00	Between S0 3RT2 Contactor (AC Coil) & S00/0 3RV2 MSP
3RA2921-1BA00	Between S0 3RT2 Contactor (DC Coil) & S00/0 3RV2 MSP
3RA2931-1AA00	Between S2 3RT2 Contactor (AC Coil) & S2 3RV2 MSP
3RA1941-1AA00	Between S3 3RT2 Contactor (AC/DC Coil) & S3 3RV2 MSP

3 phase busbar system for 3RV



3RV2925-5AB	Feeder Terminal, Size S0 2.5 - 16mm sq cable
3RV2935-5A	Feeder Terminal, Size S2 2.5 - 50mm sq cable
3RV1915-1AB	45mm Spacing for 2 Starters, Size S00 / 0
3RV1915-1BB	45mm Spacing for 3 Starters, Size S00 / 0
3RV1915-1CB	45mm Spacing for 4 Starters, Size S00 / 0
3RV1915-1DB	45mm Spacing for 5 Starters, Size S00 / 0
3RV1915-2AB	55mm Spacing for 2 Starters, Size S00 / 0 with side mount auxiliary
3RV1915-2BB	55mm Spacing for 3 Starters, Size S00 / 0 with side mount auxiliary
3RV1915-2CB	55mm Spacing for 4 Starters, Size S00 / 0 with side mount auxiliary
3RV1915-2DB	55mm Spacing for 5 Starters, Size S00 / 0 with side mount auxiliary
3RV1935-1A	55mm Spacing for 2 Starters, Size S2
3RV1935-1B	55mm Spacing for 3 Starters, Size S2
3RV1935-1C	55mm Spacing for 4 Starters, Size S2



THERMAL OVERLOAD RELAYS (3RU2) TO SUIT 3RT2 CONTACTORS CLASS 10

Size S00 to suit 3RT20 1 contactor



PART NUMBER	KW AT 400V	THERMAL OVERLOAD RELEASE A
3RU2116-0BB0	0.06	0.14 - 0.2
3RU2116-0CB0	0.06	0.18 - 0.25
3RU2116-0DB0	0.09	0.22 - 0.32
3RU2116-0EB0	0.09	0.28 - 0.4
3RU2116-0FB0	0.12	0.35 - 0.5
3RU2116-0GB0	0.18	0.45 - 0.63
3RU2116-0HB0	0.18	0.55 - 0.8
3RU2116-0JB0	0.25	0.7 - 1
3RU2116-0KB0	0.37	0.9 - 1.25
3RU2116-1AB0	0.55	1.1 - 1.6
3RU2116-1BB0	0.75	1.4 - 2
3RU2116-1CB0	0.75	1.8 - 2.5
3RU2116-1DB0	1.1	2.2 - 3.2
3RU2116-1EB0	1.1	2.8 - 4
3RU2116-1FB0	1.5	3.5 - 5
3RU2116-1GB0	2.2	4.5 - 6.3
3RU2116-1HB0	3	5.5 - 8
3RU2116-1JB0	4	7 – 10
3RU2116-1KB0	5.5	9 - 12.5
3RU2116-4AB0	7.5	11 - 16

Size S0 to suit 3RT20 2 contactor



3RU2126-1CB0	0.75	1.8 – 2.5
3RU2126-1DB0	1.1	2.2 – 3.2
3RU2126-1FB0	1.5	3.5 – 5
3RU2126-1HB0	3	5.5 – 8
3RU2126-1JB0	4	7 – 10
3RU2126-1KB0	5.50	9 – 12.5
3RU2126-4AB0	7.5	11 – 16
3RU2126-4BB0	7.5	14 – 20
3RU2126-4CB0	11	17 – 22
3RU2126-4DB0	11	18 – 25
3RU2126-4EB0	15	27 - 32
3RU2126-4PB0	15	30 - 36
3RU2126-4FB0	18.5	34 - 40

Size S2 to suit 3RT20 3 contactor



3RU2136-4AB0	7.5	11 – 16
3RU2136-4BB0	7.5	14 – 20
3RU2136-4DB0	11	18 – 25
3RU2136-4EB0	15	22 – 32
3RU2136-4FB0	18.5	28 – 40
3RU2136-4GB0	22	36 – 45
3RU2136-4HB0	22	40 – 50
3RU2136-4QB0	30	47 – 57
3RU2136-4JB0	30	54 – 65
3RU2136-4KB0	37	62 – 73
3RU2136-4RB0	37	70 – 80

THERMAL OVERLOAD RELAYS (3RU2) TO SUIT 3RT2 CONTACTORS & ACCESSORIES



Size S3 to suit 3RT20 4 contactor

PART NUMBER	KW AT 400V	THERMAL OVERLOAD RELEASE A
3RU2146-4FB0	18.5	28 - 40
3RU2146-4HB0	22	36 - 50
3RU2146-4JB0	30	45 - 63
3RU2146-4KB0	37	57 - 75
3RU2146-4LB0	45	70 - 90
3RU2146-4MB0	45	80 - 100







Accessories for 3RU2 and 3RB3

PART NUMBER	DESCRIPTION
3RU2916-3AA01	Mounting stand for 3RU2116...S00
3RU2926-3AA01	Mounting stand for 3RU2126...S0
3RU2936-3AA01	Mounting stand for 3RU2136...S2
3RU2946-3AA01	Mounting stand for 3RU2146...S3
3RU2900-1A	Resetting Plunger for 3RU2 S00/S3
3RB3980-0A	Resetting Plunger for 3RB3 S00/S3
3SU1900-0KG10-0AA0	Extension plunger for reset button
3SU1200-0FB10-0AA0	Pushbutton with extended stroke for reset
3RU2900-1B	Cable reset-400mm S00 - S3
3RU2900-1C	Cable reset-600mm S00 - S3
3RU1900-2AB71	Electrical reset module 24...30vac/dc for 3RU overloads
3RU1900-2AF71	Electrical reset module 110...127vac/dc for 3RU overloads
3RU1900-2AM71	Electrical reset module 220...250vac/dc for 3RU overloads

Note: Electrical reset modules are suitable for Sizes 00 to 3 3RU2 Overloads only.

For mechanical push button reset for 3RU2 and 3RB3 overloads, 3 items required:

3RU2
1. 3RU2900-1A
2. 3SU1900-0KG10-0AA0
3. 3SU1200-0FB10-0AA0

3RB3
1. 3RB3980-0A
2. 3SU1900-0KG10-0AA0
3. 3SU1200-0FB10-0AA0

ELECTRONIC OVERLOAD RELAYS (3RB) & ACCESSORIES CLASS 10

PART NUMBER	KW AT 400V	CURRENT SETTING A

Electronic overloads

- Electrical remote reset not possible

Size S00 to suit 3RT20 1 contactor



3RB3016-1RB0	0.04 - 0.09	0.1 - 0.4
3RB3016-1NB0	0.12 - 0.37	0.32 - 1.25
3RB3016-1PB0	0.55 - 1.5	1 - 4
3RB3016-1SB0	1.1 - 5.5	3 - 12
3RB3016-1TB0	2.2 - 7.5	4 - 16

Size S0 to suit 3RT20 2 contactor



3RB3026-1RB0	0.04 - 0.09	0.1 - 0.4
3RB3026-1NB0	0.12 - 0.37	0.32 - 1.25
3RB3026-1PB0	0.55 - 1.5	1 - 4
3RB3026-1SB0	1.1 - 5.5	3 - 12
3RB3026-1QB0	3 - 11	6 - 25
3RB3026-1VB0	5.5 - 18.5	10 - 40

Size S2 to suit 3RT20 3 contactor

3RB3036-1UB0	7.5 - 22	12.5 - 50
3RB3036-1WB0	11 - 37	20 - 80

Size S3 to suit 3RT20 4 contactor

3RB3046-1UB0	7.5 - 22	12.5 - 50
3RB3046-1XB0	18.5 - 55	32 - 115

Size S6 stand alone



3RB2056-1FW2*	30 - 90	50 – 200
3RB2056-1FC2	30 - 90	50 – 200

* Straight through CT

Size S10/12 stand alone

3RB2066-1GC2	37 - 132	55 – 250
3RB2066-1MC2	110 - 355	160 – 630

PART NUMBER	DESCRIPTION

Accessories



3RU2916-3AA01	Mounting stand for 3RU2116...S00
3RU2926-3AA01	Mounting stand for 3RU2126...S0
3RU2936-3AA01	Mounting stand for 3RU213 - S2
3RU2946-3AA01	Mounting stand for 3RU214 - S3
3RU3900-1Z	Resetting Plunger S00/S0, with Extended Button
3RU2900-1B	Cable reset-400mm S00 - S3
3RU2900-1C	Cable reset-600mm S00 - S3

MOTOR STARTER INFEED SYSTEM - 3RV29

The 3RV29 infeed system is a convenient means of energy supply and distribution for a group of several motor starter protectors or complete load feeders with a screw or spring-type connection up to 18.5kW (40A) in size S00 and S0 circuit breakers and contactors. The modular combination of basic module and expansion module by means of expansion plug enables requirement-oriented expansion of the infeed system. The system is set up extremely easily and quickly thanks to simple plug-in mounting, and it enables fast and uncomplicated installation and replacement of load feeders.

Benefits at a glance

- Time savings during installation thanks to simple plug-in technology
- Flexibility in mountin and expansion
- More free space in the control cabinet – thanks to compact design
- Maximum current-carrying capacity of 63 A
- Infeed optionally on the right or the left with up to 25 mm² conductor cross-section
- High vibration-resistance, especially for switching devices with spring-loaded terminals
- Reversing DOL starters can be accomodated.



The 3RV2 Motor Circuit and Feeder Breakers can be selected from the Size 00 and Size 0 units on page 2/53 of this price list.
Should you choose to use the Cage Clamp 3RV2 circuit breakers then replace the 10 at the end of the part number with 20 (eg. 3RV2011-1EA10 becomes 3RV2011-1EA20).

The 3RT2 Contactors can be selected from the Size 00 and Size 0 units on page 2/50 of this price list.
Should you choose to use the Spring Type connections 3RT2 contactors then -1 in the part number becomes a -2 (eg. 3RT2024-1BB40 becomes 3RT2024-2BB40).

Using the Cage Clamp system increases the time savings that can be achieved over conventional methods.

MOTOR STARTER INFEED SYSTEM - 3RV29

1



8



2



5



6



7



PART NUMBER	DESCRIPTION	LEGEND
3RV2917-1A	3-Phase Busbar with Infeed on the left, for 2 of 3RV2 Size S00 or S0 DIN Rail mount. MAX CURRENT 63A. Dimensions - 110mm W x 129mm H x 87mm D	1
3RV2917-4A	"3-Phase Busbar including extension connector (3a),for 2 of 3RV2 Size S00 or S0. Dimensions - 92mm W x 129mm H x 59mm D"	8
3RV2917-4B	"3-Phase Busbar including extension connector (3a),for 3 of 3RV2 Size S00 or S0 Dimensions - 137mm W x 129mm H x 59mm D"	2
3RV2917-5A	Connector Size S00 Spring Connection. Connects between 3 phase busbar and 3RV2 MSP	5
3RV2927-5A	Connector Size S0 Spring Connection. Connects between 3 phase busbar and 3RV2 MSP	5
3RV2917-7AA00	Contactor base for Size 00 3RT2 contactors. Two can be mounted side by side for reversing combinations.	6
3RV2927-7AA00	Contactor base for Size 00 & 0 3RT2 contactors. Two can be mounted side by side for reversing combinations.	6
3RV2917-5D	Teminal block for 6mm sq cable. Can be used to feed out to other components from the 3 phase busbar.	7
3RA2911-2AA00	Link Module S00 AC/DC 3RT2 Contactor to S00 3RV2 MSP Spring Clamp	-
3RA2921-2AA00	Link Module S0 DC 3RT2 Contactor to S0 3RV2 MSP Spring Clamp	-
3RA2921-2AA00	Link Module S0 AC 3RT2 Contactor to S0 3RV2 MSP Spring Clamp #	-
3RA2911-1CA00	# Optional height compensation spacer for size S0 AC Contactor	-

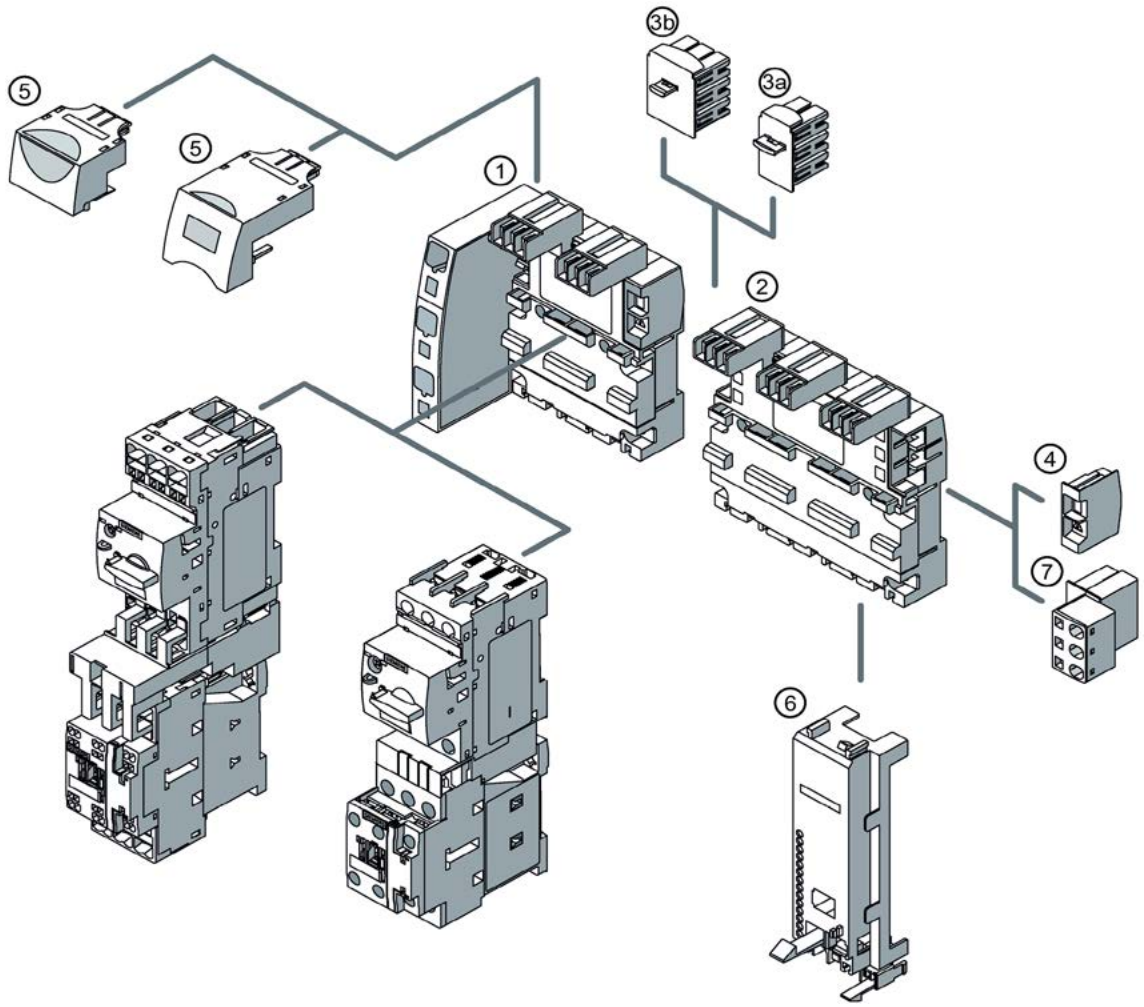

60 MM BUSBAR SYSTEMS 8US



Base assemblies up to 630 A

PART NUMBER	DESCRIPTION	ARRANGEMENT

Busbar supports

End and intermediate holders for flat copper profiles 12 mm x 5 mm, 12 mm x 10 mm, 15 mm x 5 mm, 15 mm x 10 mm, 20 mm x 5 mm, 20 mm x 10 mm, 25 mm x 5 mm, 25 mm x 10 mm, 30 mm x 5 mm, 30 mm x 10 mm Base assemblies up to 630 A





8US1923-1AA01	1-Pole, in addition for copper profiles 6 x 6 mm, mounting on 8US19 23-2AA01 3-Pole busbar supports or free standing	PE/N
8US1923-2AA01	3-Pole, with outside fixing	L1–L3
9340010	3-Pole, with outside fixing Rittal	L1–L3
8US1923-3AA01	3-Pole, with inside fixing	L1–L3
9340000	3-Pole, with inside fixing Rittal	L1–L3
8US1923-4AA00	4-Pole, with inside fixing	L1–L3 + PE/N
8US1923-5AA00	2-Pole, with outside fixing	

End covers



8US1922-1AC00	For covering unterminated busbar ends For 8US19 23-2AA01 or 8US19 23-3AA01	L1–L3
9340070	For covering unterminated busbar ends Rittal	L1–L3
8US1922-1AB00	4-Pole, for 8US19 23-4AA00 (1 pack = 2 units, 1x right, 1x left)	L1–L3 + PE/N

Infeed - terminal plate with cover



8US1921-1BA00	3-Pole 200 long, 54 wide	6-50mm sq Cable 300A
8US1921-1AA00	3-Pole 200 long, 81 wide	35-120mm sq Cable 400A
9342250	3-Pole 210 long, 90 wide	35-120mm sq Cable 250A
9342280	3-Pole 246 long, 129 wide	95-300mm sq Cable 800A

PART NUMBER	DESCRIPTION

Cover profiles for busbars





8US1922-2CA00	12 × 5 mm 1000 mm long
8US1922-2AA00	"20 × 5 mm, 1000mm long 25 × 5 mm, 30 × 5 mm 1000mm long"
8US1922-2BA00	"12 x 10 mm, 15 x 10 mm, 1000mm long 20 × 10 mm, 25 x 10 mm, 1000mm long 30 × 10 mm 1000mm long"
9340200	Busbar Cover 3 Pole 700mm long Pack of 2 Rittal
9340120	Base Tray 3 Pole 900mm Long, Pack of 2 Rittal
9340220	Support Panel for Cover 3 Pole Pack of 5 Rittal

Items in green are Rittal products

60MM BUSBAR ADAPTORS FOR MOTOR STARTERS

PART NUMBER	DESCRIPTION

60mm busbar adaptor



8US12515DS10	Busbar Adaptor, 16A, S00, 200x45 with cables
9340320	Busbar Adaptor, 25A, S00, 208x45 with cables (Rittal)
8US12515NT10	Busbar Adaptor, 32A, S0, 260x45 with cables
9340390	Busbar Adaptor, 32A, S0, 237x45 with cables (Rittal)

Link module

3RA1921-1DA00	Link module Size 00 Circuit Breaker & Contactor (AC/DC Coil)
3RA2921-1AA00	Link module Size 0 Circuit Breaker & Contactor (AC Coil)
3RA2921-1BA00	Link module Size 0 Circuit Breaker & Contactor (DC Coil)

DOL starting for 60 mm busbar systems Sizes S00 and S0

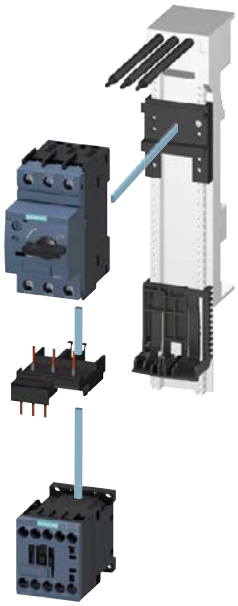

DOL starting for 60 mm busbar systems Size S2

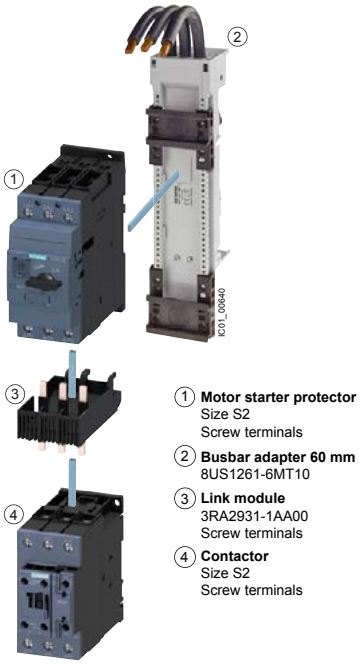

S2 busbar adaptor

8US12616MT10	Busbar Adaptor, 80A, S2, 260x54 with cables
9340450	Busbar Adaptor, 65A, S2, 272x55 with cables (Rittal)

Link module

3RA2931-1AA00	Link module between S2 3RT2 Contactor (AC Coil) & S2 3RV2 MSP

60MM MOUNTING ADAPTORS FOR 3VL AND 3VA MCCBS

Busbar adaptor



8US12114SL01	Busbar Adaptor 60mm for 3VL1, 3VL2 & 3VL MCCB to 250A
8US12134AU01	Busbar Adaptor 60mm for 3VA/11 MCCB to 144A
8US12134AP03	Busbar Adaptor 60mm for 3VA20/21/221 MCCB to 250A
8US12134AH04	Busbar Adaptor 60mm for 3VA23 MCCB to 400A
8US12134AH04	Busbar Adaptor 60mm for 3VA24 MCCB to 580A

Items in green are Rittal products

SIMOCODE - INTELLIGENT MOTOR MANAGEMENT RELAY

The risk of extremely cost-intensive plant downtimes represents the biggest problem for automated processes. Yet, the corresponding costs could be easily reduced or avoided completely. How? By preventing faults from the start, by localising faults in the system before they can cause any damage and by rectifying faults rapidly when it comes to worst – with the help of intelligent technology. SIMOCODE pro represents the best example in this context: The world's leading motor management system provides comprehensive motor data which allow for increased process control quality.

Clear advantages in terms of process control

For more than 25 years, SIMOCODE pro has been ensuring the optimum operation of constant-speed motors in the low voltage range in countless plants around the globe. The flexible, efficient and modular motor management system combines all necessary protection, monitoring, safety and control functions for every motor feeder in a single compact enclosure. It can be easily connected to the automation system via PROFIBUS or PROFINET. The resulting data transparency facilitates improved process control quality coupled with reduced costs – from plant planning to mounting and operation, right down to maintenance.

The motor management system for all requirements

SIMOCODE pro covers all functional requirements between motor feeder and automation system. The product range permanently sets new standards on the market for motor management devices: The SIMOCODE pro S device range recently supplemented the segment of simple and advanced standard applications. Frequently required functions such as ground fault and temperature monitoring as well as the connection of 230 V inputs are already available in the entry-level class of SIMOCODE pro S. With SIMOCODE pro V, the motor management range completes the portfolio for more complex tasks. Further motor protection, motor control and monitoring functions can be individually supplemented for further increased plant availability. Besides powerful hardware, SIMOCODE pro also stands for user-friendly software: SIMOCODE ES, the central software for commissioning, operation and diagnostics of SIMOCODE pro – also integrated in the TIA Portal.



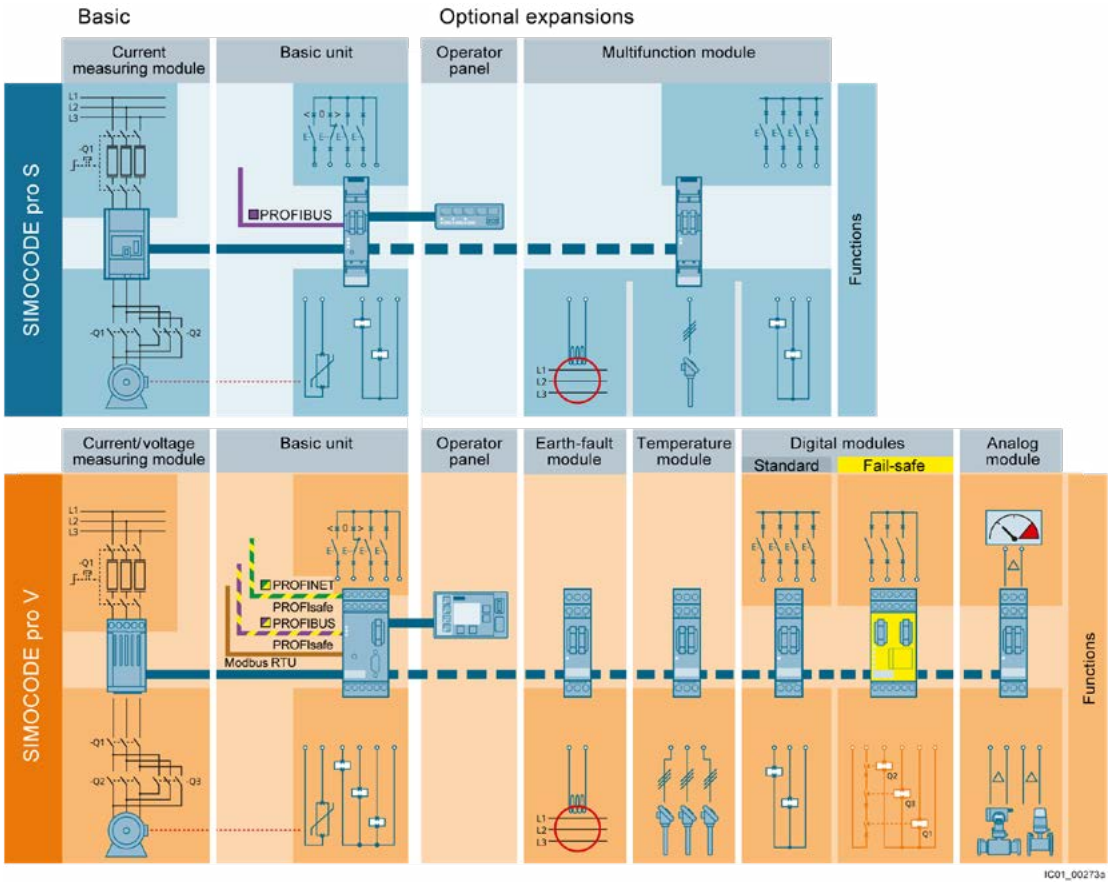

SIMOCODE - INTELLIGENT MOTOR MANAGEMENT RELAY

PART NUMBER	DESCRIPTION
Basic units	
3UF7020-1AB01-0	Pro S Profibus 24VDC
3UF7020-1AU01-0	Pro S Profibus 110-240VAC/DC
3UF7010-1AB00-0	Pro V Profibus 24VDC
3UF7010-1AU00-0	Pro V Profibus 110-240VAC/DC
3UF7011-1AB00-0	Pro V Profinet 24VDC
3UF7011-1AU00-0	Pro V Profinet 110-240VAC/DC
3UF7011-1AB00-1	Pro V Profinet General Purpose 24VDC, 2 Ports
3UF7011-1AU00-1	Pro V Profinet General Purpose 110-240VAC/DC, 2 Ports
3UF7011-1AB00-2	Pro V Profinet General Purpose 24VDC, 1 Port
3UF7011-1AU00-2	Pro V Profinet General Purpose 110-240VAC/DC, 1 Port
3UF7012-1AB00-0	Pro V Modbus RTU 24VDC
3UF7012-1AU00-0	Pro V Modbus RTU 110-240VAC/DC
3UF7013-1AB00-0	ProV Ethernet IP 24VDC
3UF7013-1AU00-0	ProV Ethernet IP 110-240VAC/DC

"||Note - Profinet General Purpose Basic modules are limited in the expansion modules that can be used, can only use CT's (no CT/VT) and can only use operator modules with no display."

Current measuring module

3UF7100-1AA00-0	0.3 - 3A Straight Through Transformer
3UF7101-1AA00-0	2.4 - 25A Straight Through Transformer
3UF7102-1AA00-0	10 - 100A Straight Through Transformer
3UF7103-1AA00-0	20 - 200A Straight Through Transformer
3UF7103-1BA00-0	20 - 200A Busbar Connection
3UF7104-1BA00-0	63 - 630A Busbar Connection

Current / voltage measuring module * NEW VERSION

Can only be used with Pro V versions.

3UF7110-1AA01-0	0.3 - 4A Straight Through Transformer
3UF7111-1AA01-0	3 - 40A Straight Through Transformer
3UF7112-1AA01-0	10 - 115A Straight Through Transformer
3UF7113-1AA01-0	20 - 200A Straight Through Transformer
3UF7113-1BA01-0	20 - 200A Busbar Connection
3UF7114-1BA01-0	63 - 630A Busbar Connection

Notes:

- New version can be used on old Basic versions but they will operate under the old current ranges.
- New version will measure frequency when used with latest vesion Basic Unit.
- New version units up to 115A now have DIN mounting rail on top.

Operator panels

3UF7200-1AA01-0	Operator panel no display - titanium grey
3UF7210-1AA01-0	Operator panel with display - *Pro V only - titanium grey

SIMOCODE - INTELLIGENT MOTOR MANAGEMENT RELAY

PART NUMBER	DESCRIPTION

Optional expansion modules (for use with Pro V Basic Unit)



3UF7300-1AB00-0	4xDI; 2xDO; Monostable, 24VDC Input Voltage
3UF7300-1AU00-0	4xDI; 2xDO; Monostable, 110-240VAC/DC Input Voltage
3UF7310-1AB00-0	4xDI; 2xDO; Bistable, 24VDC Input Voltage
3UF7310-1AU00-0	4xDI; 2xDO; Bistable, 110-240VAC/DC Input Voltage
3UF7320-1AB00-0	Fail Safe Digital Module Local Operation 24VDC
3UF7320-1AU00-0	Fail Safe Digital Module Local Operation 110-240VAC/DC
3UF7330-1AB00-0	Fail Safe Digital Module Profisafe 24VDC
3UF7330-1AU00-0	Fail Safe Digital Module Profisafe 110-240VAC/DC
3UF7400-1AA00-0	Analogue module
3UF7510-1AA00-0	Ground Fault module *
3UF7700-1AA00-0	Temperature module



* Possible with Pro V basic unit from product version E10 or Pro V PN basic unit from product version E04

Optional expansion modules (for use with Pro S basic unit)



3UF7600-1AB01-0	"4xDI; 2xDO; ground fault detection, temperature measuring, 24VDC Input Voltage"
3UF7600-1AU01-0	"4xDI; 2xDO; ground fault detection, temperature measuring, 110-240VAC/DC Input Voltage"

Connection Cables



3UF7930-0AA00-0	0.025m, Flat; Basic Unit to Expansion Module
3UF7931-0AA00-0	0.1m, Flat; Basic Unit to CT, CT/VT or Exp. Mod.
3UF7934-0AA00-0	0.15m, Flat; Basic Unit to CT/VT or Exp. Mod.
3UF7935-0AA00-0	0.3m, Flat; Basic Unit to CT, CT/VT or Exp. Mod.
3UF7932-0AA00-0	0.5m, Flat; Basic Unit to CT, CT/VT or Exp. Mod.

3UF7932-0BA00-0	0.5m, Round; Basic Unit to CT, CT/VT or Exp. Mod.
3UF7937-0BA00-0	1.0m, Round; Basic Unit to CT, CT/VT or Exp. Mod.
3UF7933-0BA00-0	2.5m, Round; Basic Unit to CT, CT/VT or Exp. Mod.

Bus connecting terminal (Pro S only)



3UF7960-0AA00-0	Terminal for connecting Profibus Cable to a Pro S

Ground fault summation CTs



3UL2302-1A	Summation CT for ground fault module 35mm window
3UL2303-1A	Summation CT for ground fault module 55mm window
3UL2304-1A	Summation CT for ground fault module 80mm window
3UL2305-1A	Summation CT for ground fault module 110mm window
3UL2306-1A	Summation CT for ground fault module 140mm window
3UL2307-1A	Summation CT for ground fault module 210mm window

Programming accessories



3UF7941-0AA00-0	USB PC Cable

3RM1 COMPACT SOLID STATE MOTOR STARTERS

The new SIRIUS 3RM1 Motor Starters are designed for installation in control cabinets and require minimal space. They combine the functionality of contactors and overload relays in a package of just 22.5mm wide. The 3RM1 makes your work easier, offering easy adjustment of motor current, minimal wiring costs and fast trouble shooting. With these starters you can build more compact control cabinets.



DOL starters

PART NUMBER	DESCRIPTION
3RM1001-1AA04	DOL, 0.1 - 0.5A, 24 V DC
3RM1001-1AA14	DOL, 0.1 - 0.5A, 110-230 V AC
3RM1002-1AA04	DOL, 0.4 - 2A, 24 V DC
3RM1002-1AA14	DOL, 0.4 - 2A, 110-230 V AC
3RM1007-1AA04	DOL, 1.6 - 7A, 24 V DC
3RM1007-1AA14	DOL, 1.6 - 7A, 110-230 V AC



Reversing DOL starters

3RM1201-1AA04	Reversing DOL, 0.1 - 0.5A, 24 V DC
3RM1201-1AA14	Reversing DOL, 0.1 - 0.5A, 110-230 V AC
3RM1202-1AA04	Reversing DOL, 0.4 - 2A, 24 V DC
3RM1202-1AA14	Reversing DOL, 0.4 - 2A, 110-230 V AC
3RM1207-1AA04	Reversing DOL, 1.6 - 7A, 24 V DC
3RM1207-1AA14	Reversing DOL, 1.6 - 7A, 110-230 V AC



Accessories

3RM1910-1AA	3-Phase Busbar for 2 Starters Spacing 45mm
3RM1910-1BA	3-Phase Busbar for 3 Starters Spacing 45mm
3RM1910-1DA	3-Phase Busbar for 5 Starters Spacing 45mm
3RM1910-6AA	Cap for Busbar
3RM1920-1AA	3-Phase In feed terminal

Note: Also available in Spring Clamp connection.



TYPE 2 COORDINATION, CLASS 10, 150KA MSP & CONTACTOR

KW RATING KW	MOTOR CURRENT A	IE3/4 MOTORS A	PART NUMBER MOTOR STARTER PROTECTOR	PART NUMBER CONTACTOR	PART NUMBER LINK MODULE BETWEEN MSP & CONTACTOR	SIZE
0.04	0.16	0.11 ... 0.14	3RV2011-0AA10	3RT2015-1AP01	3RA1921-1DA00	S00/S00
0.06	0.2	0.14 ... 0.18	3RV2011-0BA10	3RT2015-1AP01	3RA1921-1DA00	S00/S00
0.06	0.2	0.18 ... 0.22	3RV2011-0CA10	3RT2015-1AP01	3RA1921-1DA00	S00/S00
0.09	0.3	0.22 ... 0.28	3RV2011-0DA10	3RT2015-1AP01	3RA1921-1DA00	S00/S00
0.09	0.3	0.28 ... 0.35	3RV2011-0EA10	3RT2015-1AP01	3RA1921-1DA00	S00/S00
0.12	0.4	0.35 ... 0.45	3RV2011-0FA10	3RT2015-1AP01	3RA1921-1DA00	S00/S00
0.18	0.6	0.45 ... 0.55	3RV2011-0GA10	3RT2015-1AP01	3RA1921-1DA00	S00/S00
0.18	0.6	0.55 ... 0.7	3RV2011-0HA10	3RT2015-1AP01	3RA1921-1DA00	S00/S00
0.25	0.85	0.7 ... 0.9	3RV2011-0JA10	3RT2015-1AP01	3RA1921-1DA00	S00/S00
0.37	1.1	0.9 ... 1.1	3RV2011-0KA10	3RT2015-1AP01	3RA1921-1DA00	S00/S00
0.55	1.5	1.1 ... 1.4	3RV2011-1AA10	3RT2015-1AP01	3RA1921-1DA00	S00/S00
0.75	1.9	1.4 ... 1.8	3RV2011-1BA10	3RT2015-1AP01	3RA1921-1DA00	S00/S00
0.75	1.9	1.8 ... 2.2	3RV2011-1CA10	3RT2015-1AP01	3RA1921-1DA00	S00/S00
1.1	2.7	2.2 ... 2.8	3RV2011-1DA10	3RT2015-1AP01	3RA1921-1DA00	S00/S00
1.5	3.6	2.8 ... 3.5	3RV2011-1EA10	3RT2015-1AP01	3RA1921-1DA00	S00/S00
1.5	3.6	3.5 ... 4.5	3RV2011-1FA10	3RT2024-1AP00	3RA2921-1AA00	S00/S0
2.2	5	4.5 ... 5.5	3RV2011-1GA10	3RT2024-1AP00	3RA2921-1AA00	S00/S0
3	6.5	5.5 ... 7	3RV2011-1HA10	3RT2024-1AP00	3RA2921-1AA00	S00/S0
4	8.5	7 ... 9	3RV2011-1JA10	3RT2024-1AP00	3RA2921-1AA00	S00/S0
5.5	11.5	9 ... 10	3RV2011-1KA10	3RT2024-1AP00	3RA2921-1AA00	S00/S0
7.5	15.5	10 ... 13	3RV2011-4AA10	3RT2026-1AP00	3RA2921-1AA00	S00/S0
7.5	15.5	13 ... 16	3RV2021-4BA10	3RT2027-1AP00	3RA2921-1AA00	S0/S0
11	22	16 ... 18	3RV2021-4CA10	3RT2027-1AP00	3RA2921-1AA00	S0/S0
11	22	18 ... 23	3RV2021-4DA10	3RT2027-1AP00	3RA2921-1AA00	S0/S0
15	29	23 ... 27	3RV2021-4NA10	3RT2027-1AP00	3RA2921-1AA00	S0/S0
18.5	35	28 ... 32	3RV2032-4PA10	3RT2035-1AP00	3RA2931-1AA00	S2/S2
18.5	35	32 ... 35	3RV2032-4UA10	3RT2035-1AP00	3RA2931-1AA00	S2/S2
22	41	35 ... 42	3RV2032-4VA10	3RT2036-1AP00	3RA2931-1AA00	S2/S2
22	41	42 ... 49	3RV2032-4WA10	3RT2036-1AP00	3RA2931-1AA00	S2/S2
30	55	49 ... 54	3RV2032-4XA10	3RT2037-1AP00	3RA2931-1AA00	S2/S2
30	55	54 ... 62	3RV2032-4JA10	3RT2037-1AP00	3RA2931-1AA00	S2/S2
37	66	62 ... 70	3RV2032-4KA10	3RT2038-1AP00	3RA2931-1AA00	S2/S2
45	80	65 ... 80	3RV2042-4RA10	3RT2045-1AP00	3RA1941-1AA00	S3/S3
45	80	75 ... 93	3RV2042-4YA10	3RT2046-1AP00	3RA1941-1AA00	S3/S3
55	97	80 ... 100	3RV2042-4MA10	3RT2047-1AP00	3RA1941-1AA00	S3/S3

Note: Other voltage contactors may be used but may require a different link.

RELAYS

PART NUMBER	DESCRIPTION	CONTACTS

3RH contactor relays (operating current at AC-12 maximum 10A)



3RH2122-1A*00	Contactor Relay AC Coil	2N/O + 2N/C
3RH2122-1BB40	Contactor Relay 24 VDC Coil	2N/O + 2N/C
3RH2131-1A*00	Contactor Relay AC Coil	3N/O + 1N/C
3RH2131-1BB40	Contactor Relay 24 VDC Coil	3N/O + 1N/C
3RH2140-1A*00	Contactor Relay AC Coil	4N/O
3RH2140-1BB40	Contactor Relay 24 VDC Coil	4N/O

Replace * with: B = 24VAC F=110VAC P=230VAC

Front mount auxiliary contact blocks

For assembling contactor relays with 8 contacts



3RH2911-1GA22	Front Mount Auxiliary Contact Block	2N/O + 2N/C
3RH2911-1GA13	Front Mount Auxiliary Contact Block	1N/O + 3N/C
3RH2911-1GA31	Front Mount Auxiliary Contact Block	3N/O + 1N/C
3RH2911-1GA40	Front Mount Auxiliary Contact Block	4N/O

Note: 3RH2911-1GA Auxiliary contact blocks need to be used on 3RH2140 Relays.

3RH2911-1HA13	Front Mount Auxiliary Contact Block	1N/O + 3N/C
3RH2911-1HA22	Front Mount Auxiliary Contact Block	2N/O + 2N/C
3RH2911-1HA31	Front Mount Auxiliary Contact Block	3N/O + 1N/C
3RH2911-1FA40	Front Mount Auxiliary Contact Block	4N/O

Note: 3TH43 6A 10 Pole Contactor Relays avialable on an indent basis. These are available in 24VDC and 230VAC control and with a combination of 5 NO + 5 NC through to 10 NO + 0 NC.

Plug in relays (DRI Series) with test button



8881580000	Rider Relay Kit 24VDC 16A LED	1 C/O
8881590000	Rider Relay Kit 24VAC 16A LED	1 C/O
8881600000	Rider Relay Kit 230VAC 16A LED	1 C/O
8881610000	Rider Relay Kit 24VDC 16A LED	2 C/O
8881620000	Rider Relay Kit 24VAC 16A LED	2 C/O
8881630000	Rider Relay Kit 230VAC 16A LED	2 C/O

SAFETY RELAYS - 3SK1



PART NUMBER	DESCRIPTION	ADJUSTABLE OFF-DELAY TIME	CONTROL VOLTAGE	OUTPUTS	
				ENABLE CIRCUITS	SIGNALING CIRCUITS
3SK1111-1AB30	Standard basic unit with Relay Outputs	–	24 V AC/DC	3	1
3SK1111-1AW20	Standard basic unit with Relay Outputs	–	110-240 V AC/ DC	3	1
3SK1112-1BB40	Standard basic unit with Semiconductor Outputs	–	24V DC	2	1
3SK1121-1AB40	Advanced basic unit with Relay Outputs	–	24V DC	3	1
3SK1121-1CB41	Advanced basic unit with Relay Outputs	0.05 to 3 sec	24V DC	2/2*	
3SK1121-1CB42	Advanced basic unit with Relay Outputs	0.5 to 30 sec	24V DC	2/2*	
3SK1122-1AB40	Advanced basic unit with Semiconductor Outputs	–	24V DC	3	1
3SK1122-1CB42	Advanced basic unit with Semiconductor Outputs	0.5 to 30 sec	24V DC	2/2*	
3SK1211-1BB40	Output expansion module with Relay Outputs	–	24V DC	4	1
3SK1213-1AB40	10A Output expansion module with Relay Outputs	–	24V DC	3	1
3SK1220-1AB40	Input expansion module (for Advanced units only)	–	24V DC		



* Time Delayed Output

PART NUMBER	DESCRIPTION
3SK1230-1AW20	Optional 24VDC power supply up to 6 devices



Device connectors (for saving wiring between advanced units and input or output modules)

3ZY1212-1BA00	17.5mm wide device connector
3ZY1212-2BA00	22.5mm wide device connector

Note: Motors up to 3kW can be easily integrated into the safety relay system using SIRIUS 3RM1 and 3ZY1 device connectors, without having to run a cable between the evaluation unit and the motor starter.



TIMING RELAYS - 3RP25



PART NUMBER	DESCRIPTION	TIME SETTING	CONTACTS	CONTROL VOLTAGE
Multi function timing relays, 15 time setting ranges				
3RP2505-1AW30	13 Functions	(1, 3, 10, 30, 100), (S/MIN/HR)	1 C/O	12-240V AC/DC
3RP2505-1BW30	27 Functions	(1, 3, 10, 30, 100), (S/MIN/HR)	2 C/O	12-240V AC/DC
On delay timer				
3RP2511-1AW30		0.5 to 10 sec	1 C/O	12-240V AC/DC
3RP2512-1AW30		1.5 to 30 sec	1 C/O	12-240V AC/DC
3RP2513-1AW30		5 to 100 sec	1 C/O	12-240V AC/DC
3RP2525-1BW30		0.05 sec to 100 hours	2 C/O	12-240V AC/DC
Off delay timer				
3RP2535-1AW30	With auxiliary voltage	0.05 sec to 100 hours	1 C/O	12-240V AC/DC
3RP2540-1AW30	Without auxiliary voltage	0.05 to 600 sec	1 C/O	12-240V AC/DC
3RP2540-1BW30	Without auxiliary voltage	0.05 to 600 sec	2 C/O	12-240V AC/DC
Clock pulse timing relays, 15 time setting ranges				
3RP2555-1AW30		0.05 sec to 100 hours	1 C/O	12-240V AC/DC
Star/Delta timing relay				
3RP2574-1NW30	1 Instantaneous, 1 Delayed contact	1 to 20 sec	2 NO	12-240V AC/DC

Timing Function Chart

CODE LETTER OF THE SET FUNCTION	13 FUNCTIONS (A–M)	27 FUNCTIONS 13 functions (A–M), 2 CO parallel switching + 13 functions (A–M), 1 CO delayed + 1 CO instantaneous switching + 1 star/wye-delta function
A	ON delay	ON delay and instantaneous switching
B	OFF delay with control signal	OFF delay with control signal and instantaneous switching
C	ON/OFF delay with control signal	ON/OFF delay and instantaneous switching
D	Flashing, symmetrical, start with break	Flashing, symmetrical, start with break and instantaneous switching
E	Passing make contact function, interval relay	Passing make contact function, interval relay and instantaneous switching
F	Retriggerable interval relay with disconnected control signal (passing break contact function with control signal)	Retriggerable interval relay with disconnected control signal (passing break contact with control signal) and instantaneous switching
G	Passing make contact function, with control signal, not retriggerable (pulse-shaping with control signal)	Passing make contact function, with control signal, not retriggerable (pulse-shaping with control signal) and instantaneous switching
H	Additive ON delay, undelayed OFF with control signal	Additive ON delay, undelayed OFF with control signal and instantaneous switching
I	Additive ON delay with control signal	Additive ON delay with control signal and instantaneous switching
J	Flashing, symmetrical, start with pulse	Flashing, symmetrical, start with pulse and instantaneous switching
K	Pulse delay, pulse permanently set, pulse length 1s and pulse delay adjustable	Pulse delay, pulse permanently set, pulse length 1s and pulse delay adjustable and instantaneous switching
L	Pulse delay with control signal Pulse permanently set, pulse length 1s and pulse delay adjustable	Pulse delay, pulse permanently set, pulse length 1s and pulse delay adjustable and instantaneous switching
M	Retriggerable interval relay with connected control signal (watchdog)	Retriggerable interval relay with connected control signal (watchdog) and instantaneous switching
Y Δ		Star / Delta function

MONITORING RELAYS - VOLTAGE, CURRENT & GROUND FAULT

PART NUMBER	DESCRIPTION	TRIPPING DELAY	CONTACTS	CONTROL/SUPPLY VOLTAGE
Monitoring of phase sequence				
				
3UG4511-1AP20	Analogue Monitoring Relay	–	1 C/O	320-500VAC
3UG4511-1BP20	Analogue Monitoring Relay	–	2 C/O	320-500VAC
Monitoring of phase sequence, phase failure & phase unbalance				
3UG4512-1AR20	Analogue Monitoring Relay	–	1 C/O	160-690VAC
3UG4512-1BR20	Analogue Monitoring Relay	–	2 C/O	160-690VAC
Monitoring of phase sequence, phase failure, unbalance & under voltage				
				
3UG4513-1BR20	Analogue adjustable, Auto Reset	0.1 to 20 sec	2 C/O	160-690VAC
3UG4614-1BR20	Digitally adjustable, Auto or Man Reset	0.1 to 20 sec	2 C/O	160-690VAC
Monitoring of phase sequence, phase failure, unbalance, over & under voltage				
3UG4615-1CR20	Digitally adjustable, Auto or Man Reset	0.1 to 20 sec	2 C/O	160-690VAC
Automatic correction of the direction of the rotation in case of wrong phase sequence, phase failure, unbalance, over & under voltage				
				
3UG4617-1CR20	Digital Monitoring Relay	0.1 to 20 sec	2 C/O	160-690VAC
Voltage monitoring, internal power supply without auxiliary voltage				
3UG4633-1AL30	Digitally adjustable, Auto or Man Reset	0.1 to 20 sec	1 C/O	17-275VAC/DC
Voltage monitoring, supplied from an external auxiliary voltage				
3UG4632-1AW30	Digitally adjustable, Auto or Man Reset measuring range 10 - 600V AC/DC	0.1 to 20 sec	1 C/O	24 - 240V
Monitoring of under & over current				
3UG4622-1AW30	Digitally adjustable, Auto or Man Reset measuring range 0.05 - 10A AC/DC	0.1 to 20 sec	1 C/O	24 - 240V AC/DC
Thermistor motor protection relay				
3RN2010-1CW30	Compact Relay Auto Reset	–	1NO + 1NC	24 - 240V AC/DC
3RN2012-1BW30	Standard Relay, Manual/Auto/Remote reset 2 LEDs (READY/TRIPPED), Test/reset button, Open & Short circuit monitoring	–	2 C/O	24 - 240V AC/DC
Residual current monitoring relay with summation CT				
				
3UG4625-1CW30	Monitoring residual currents 0.03 to 40A Requires 3UL23 Summation CT	0 to 20 sec	2 C/O 1 contact for warning 1 contact for tripping	24 - 240V AC/DC

PART NUMBER	DESCRIPTION
Ground fault summation CTs	
3UL2302-1A	Summation CT with 35mm window
3UL2303-1A	Summation CT with 55mm window
3UL2304-1A	Summation CT with 80mm window
3UL2305-1A	Summation CT with 110mm window
3UL2306-1A	Summation CT with 140mm window
3UL2307-1A	Summation CT with 210mm window

PUSH BUTTONS AND LAMPS - PLASTIC (3SU) IP69K

Complete push buttons





PART NUMBER	COLOUR	NO CONTACT	NC CONTACT	VOLTAGE
PB-P-BLK	Black	1	-	-
PB-P-RED	Red	-	1	-
PB-P-YLW	Yellow	1	-	-
PB-P-GRN	Green	1	-	-
PB-P-BLU	Blue	1	-	-
PB-P-WHT	White	1	-	-
PB-P-TWIN	Green/Red	1	1	-

Complete push buttons - illuminated (integrated LED)



PBI-P-110-RED	Red	-	1	110VAC
PBI-P-110-YLW	Yellow	1	-	110VAC
PBI-P-110-GRN	Green	1	-	110VAC
PBI-P-110-BLU	Blue	1	-	110VAC
PBI-P-110-WHT	White	1	-	110VAC



PBI-P-230-RED	Red	-	1	230VAC
PBI-P-230-YLW	Yellow	1	-	230VAC
PBI-P-230-GRN	Green	1	-	230VAC
PBI-P-230-BLU	Blue	1	-	230VAC
PBI-P-230-WHT	White	1	-	230VAC



PBI-P-24-RED	Red	-	1	24VAC/DC
PBI-P-24-YLW	Yellow	1	-	24VAC/DC
PBI-P-24-GRN	Green	1	-	24VAC/DC
PBI-P-24-BLU	Blue	1	-	24VAC/DC
PBI-P-24-WHT	White	1	-	24VAC/DC

Note: In addition to the colours above, also available in Amber (AMB).

Complete selector switch (can be illuminated)



SEL2-P-NO	2 Position	Black/White	1	-	-
SEL2-P-NO+NC	2 Position	Black/White	1	1	-
SEL3-P-NO	3 Position	Black/White	2	-	-

Complete indicator light (integrated LED)



PART NUMBER	VOLTAGE
IND-P-110-*	110VAC
IND-P-230-*	230VAC
IND-P-24-*	24VAC/DC

Replace * with required colour | e.g IND-P-110-YLW
Note: In addition to the colours above, also available in Amber (AMB).

Complete MRH push button - “Emergency Stop”



PART NUMBER	DESCRIPTION	NC CONTACT
ESTOP-P	40mm,Twist to Release	1

Cross reference for APS push button codes to Siemens codes on page 2/80

PUSH BUTTONS AND LAMPS - METAL (3SU) IP69K





Complete push buttons

PART NUMBER	COLOUR	NO CONTACT	NC CONTACT	VOLTAGE
PB-M-BLK	Black	1	-	-
PB-M-RED	Red	-	1	-
PB-M-YLW	Yellow	1	-	-
PB-M-GRN	Green	1	-	-
PB-M-BLU	Blue	1	-	-
PB-M-WHT	White	1	-	-
PB-M-TWIN	Green/Red	1	1	-

Complete push buttons - illuminated (integrated LED)



PART NUMBER	COLOUR	NO CONTACT	NC CONTACT	VOLTAGE
PBI-M-110-RED	Red	-	1	110VAC
PBI-M-110-YLW	Yellow	1	-	110VAC
PBI-M-110-GRN	Green	1	-	110VAC
PBI-M-110-BLU	Blue	1	-	110VAC
PBI-M-110-WHT	White	1	-	110VAC



PBI-M-230-RED	Red	-	1	230VAC
PBI-M-230-YLW	Yellow	1	-	230VAC
PBI-M-230-GRN	Green	1	-	230VAC
PBI-M-230-BLU	Blue	1	-	230VAC
PBI-M-230-WHT	White	1	-	230VAC



PBI-M-24-RED	Red	-	1	24VAC/DC
PBI-M-24-YLW	Yellow	1	-	24VAC/DC
PBI-M-24-GRN	Green	1	-	24VAC/DC
PBI-M-24-BLU	Blue	1	-	24VAC/DC
PBI-M-24-WHT	White	1	-	24VAC/DC

Note: In addition to the colours above, also available in Amber (AMB).

Complete selector switch (can be illuminated)



SEL2-M-NO	2 Position	Black/White	1	-	-
SEL2-M-NO+NC	2 Position	Black/White	1	1	-
SEL3-M-NO	3 Position	Black/White	2	-	-

PART NUMBER	VOLTAGE

Complete indicator light (integrated LED)



IND-M-110-*	110VAC
IND-M-230-*	230VAC
IND-M-24-*	24VAC/DC

Replace * with required colour | e.g IND-M-110-YLW
Note: In addition to the colours above, also available in Amber (AMB).

PART NUMBER	DESCRIPTION	NC CONTACT

Complete MRH push button - “Emergency Stop”



ESTOP-M	40mm, Twist To Release	1

Find APS push button codes to Siemens part numbers on page 2/80

PUSH BUTTONS 30MM METAL (3SU) 30MM CUTOUT IP69K

PART NUMBER	COLOUR

Push buttons - flush



PB-M30- BLK	Black
PB-M30-RED	Red
PB-M30-YLW	Yellow
PB-M30-GRN	Green
PB-M30-BLU	Blue
PB-M30-WHT	White

Push buttons - illuminated - flush



PBI-M30-CLR	Clear
PBI-M30-RED	Red
PBI-M30-YLW	Yellow
PBI-M30-GRN	Green
PBI-M30-BLU	Blue

Indicator - flush

IND-M30-CLR	Clear
IND-M30-RED	Red
IND-M30-YLW	Yellow
IND-M30-GRN	Green
IND-M30-BLU	Blue

Selector switch



SEL2-M30	2 position
SEL3-M30	3 position

Units required for complete push button

Actuator	
Contact Holder	
Contact Block	

=> Complete unit requires 3 parts

Cross reference for APS push button codes to Siemens codes on page 2/80

4 POSITION SWITCHES, KEY SWITCHES, ACOUSTIC DEVICES & POTENTIOMETERS (3SU)

	PART NUMBER	DESCRIPTION
4 Position selector switch (actuator only)		
	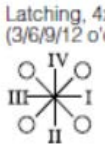	3SU1000-2AS60-0AA0 — Plastic rotary 4 position knob
		3SU1050-2AS60-0AA0 — Metal rotary 4 position knob
Plastic - 2 Position key switch (actuator only)		
	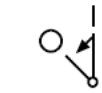	3SU1000-4BC01-0AA0 — Momentary contact 45° key removeable in O position Ronis SB30 key
		3SU1000-4BF01-0AA0 — Latching contact 90° key removeable in O position Ronis SB30 key
Plastic - 3 Position key switch (actuator only)		
	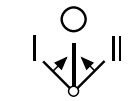	3SU1000-4BM01-0AA0 — Momentary contact, 2x45° key removeable in O position Ronis SB30 key
	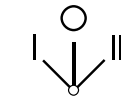	3SU1000-4BL11-0AA0 — Latching contact, 2x45° key removeable in I-O-II positions Ronis SB30 key
Metal - 2 Position key switch (actuator only)		
	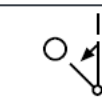	3SU1050-4BC01-0AA0 — Momentary contact 45° key removeable in O position Ronis SB30 key
		3SU1050-4BF01-0AA0 — Latching contact 90° key removeable in O position Ronis SB30 key
Metal - 3 Position key switch (actuator only)		
	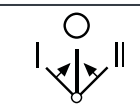	3SU1050-4BM01-0AA0 — Momentary contact, 2x45° key removeable in O position Ronis SB30 key
	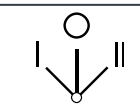	3SU1050-4BL11-0AA0 — Latching contact, 2x45° key removeable in I-O-II positions Ronis SB30 key
Acoustic signaling devices		
		3SU1200-6KB10-1AA0 — 24V AC/DC 90dB Acoustic unit
		3SU1200-6KF10-1AA0 — 230V AC/DC 90dB Acoustic unit
Potentiometers		
		3SU1200-2PQ10-1AA0 — 1kΩ Rotary knob
		3SU1200-2PW10-1AA0 — 2.2kΩ Rotary knob
		3SU1200-2PR10-1AA0 — 4.7kΩ Rotary knob
		3SU1200-2PS10-1AA0 — 10kΩ Rotary knob

PUSH BUTTON ACCESSORIES (3SU)

PART NUMBER	DESCRIPTION

Contact blocks - panel mount



CONPM-11	Contact Block 1 NO + 1 NC
CONPM-10	Contact Block 1 NO
CONPM-01	Contact Block 1 NC
CONPM-ESTOP	Contact Block 1 NC for installatuon monitoring on E Stop

Contact blocks - base mount (for use in enclosures)

CONBM-10	Contact Block 1 NO
CONBM-01	Contact Block 1 NC

Integrated LED (lamp holder) - panel mount (for use in enclosures)



LEDPM-110-*	Integrated LED 110V AC Lamp Holder
LEDPM-230-*	Integrated LED 230V AC Lamp Holder
LEDPM-24-*	Integrated LED 24V AC/DC Lamp Holder

Replace * with required colour | e.g IND-P-110-YLW
Note: All colours as above available together with Amber (AMB).

Integrated LED (lamp holder) - base mount

LEDBM-110-*	Integrated LED 110V AC Lamp Holder
LEDBM-230-*	Integrated LED 230V AC Lamp Holder
LEDBM-24-*	Integrated LED 24V AC/DC Lamp Holder

Replace * with required colour | e.g IND-P-110-YLW
Note: All colours as above available together with Amber (AMB).

Holders for contact blocks & LED modules



HOLDER3-P	Module Holder for 3 Modules,Plastic
HOLDER3-M	Module Holder for 3 Modules,Metal
3SU1500-0BA10-0AA0	Module Holder For 4 Position Selector Switch, Plastic
3SU1550-0BA10-0AA0	Module Holder For 4 Position Selector Switch, Metal

Label holders & labels



LHOLDER	Label Holder,12.5x27 Square Bottom
LABEL BLANK	Label 12.5x27 Blank Black/Silver

Test modules

TESTMOD-LED	LED Test Module

Sealing Plugs



3SU1900-0FA10-0AA0	Plastic Sealing Plugs for 22mm Holes
3SU1950-0FA80-0AA0	Metal Sealing Plugs for 22mm Holes

Note: The sealing plug is mounted with a holder.

LED test module wiring diagram

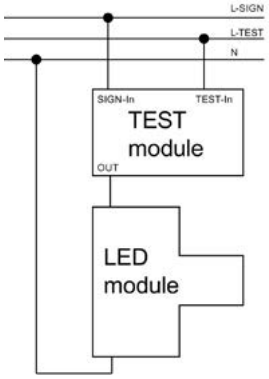

Find APS push button codes to Siemens part numbers on page 2/80

PUSH BUTTON ENCLOSURES (3SU)





Complete control station - plastic

PART NUMBER	ENCLOSURE COLOUR	ACTUATOR TYPE / COLOUR	NO CONTACT	NC CONTACT
ENC-P-PB1	Grey	Push Button / Green	1	-
ENC-P-PB2	Grey	Push Button / Green	1	-
		Push Button / Red	-	1
ENC-P-ESTOP1	Yellow	E-Stop / Red	-	1
ENC-P-ESTOP2	Yellow with Collar	E-Stop / Red	-	1



Complete control station - metal

PART NUMBER	ENCLOSURE COLOUR	ACTUATOR TYPE / COLOUR	NO CONTACT	NC CONTACT
ENC-M-PB1	Grey	Push Button / Green	1	-
ENC-M-PB2	Grey	Push Button / Green	1	-
		Push Button / Red	-	1
ENC-M-ESTOP1	Yellow	E-Stop / Red	-	1
ENC-M-ESTOP2	Yellow with Collar	E-Stop / Red	-	1

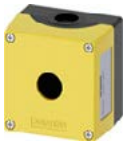

Empty enclosures - plastic

PART NUMBER	ENCLOSURE COLOUR	NUMBER OF HOLES
3SU1801-0AA00-0AA2	Yellow	1
3SU1801-0AA00-0AC2	Yellow with Collar	1
3SU1801-0AA00-0AB1	Grey	1
3SU1802-0AA00-0AB1	Grey	2
3SU1803-0AA00-0AB1	Grey	3
3SU1804-0AA00-0AB1	Grey	4
3SU1806-0AA00-0AB1	Grey	6



Empty enclosures - metal

PART NUMBER	ENCLOSURE COLOUR	NUMBER OF HOLES
3SU1851-0AA00-0AA2	Yellow	1
3SU1851-0AA00-0AC2	Yellow with Collar	1
3SU1851-0AA00-0AB1	Grey	1
3SU1852-0AA00-0AB1	Grey	2
3SU1853-0AA00-0AB1	Grey	3
3SU1854-0AA00-0AB1	Grey	4
3SU1856-0AA00-0AB1	Grey	6



Empty enclosures - 304 stainless steel

2384010	Natural	1
2384020	Natural	2
2384030	Natural	3

Find APS push button codes to Siemens part numbers on page 2/80

PROFINET ENABLED PUSH BUTTONS

The SIRIUS ACT communication solution enables you to connect command and signaling devices simply, quickly and with minimal wiring to a programmable logic controller (PLC). Using PROFINET's open Industrial Ethernet standard, you will be able to set up complex input stations easily and efficiently. This system also permits the integration of safety functions via PROFIsafe, enabling you, for example, to integrate an EMERGENCY STOP quickly and simply without the need for additional hardware.

You do not need to address individual stations (SIRIUS ACT command and signaling devices). Thanks to "option handling", it is easy to extend an application without reconfiguring it, helping you to save time, resources and hardware.

The general system configuration comprises an interface module that establishes communication to the PLC via PROFINET, and up to 20 terminal modules. These modules are interconnected by a 7-wire standard flat ribbon cable. The entire system is supplied with 24 V DC. You only need to connect the supply voltage to the interface module.

PART NUMBER	

Profinet interface modules



3SU1400-1LK10-1AA1	Standard IM, 24VDC, 1-20 TMs connectable
3SU1400-1LL10-1BA1	Fail Safe IM, 24VDC, 1-20 TMs connectable

Profinet terminal modules

Command module

3SU1400-1MA10-1BA1	Two spring contacts that are moved by the actuator

Command and LED module





3SU1401-1MC00-1CA1	Amber LED and two spring contacts
3SU1401-1MC20-1CA1	Red LED and two spring contacts
3SU1401-1MC30-1CA1	Yellow LED and two spring contacts
3SU1401-1MC40-1CA1	Green LED and two spring contacts
3SU1401-1MC50-1CA1	Blue LED and two spring contacts
3SU1401-1MC60-1CA1	White LED and two spring contacts

LED module



3SU1401-1ME00-1DA1	Amber LED
3SU1401-1ME20-1DA1	Red LED
3SU1401-1ME30-1DA1	Yellow LED
3SU1401-1ME40-1DA1	Green LED
3SU1401-1ME50-1DA1	Blue LED
3SU1401-1ME60-1DA1	White LED

Accessories

3RK3931-0AA00	Memory module for storage of data configuration
3SU1900-0KQ80-0AA0	Flat ribbon cable 5m
3SU1900-0KP80-0AA0	Flat ribbon cable 10m



APS PUSH BUTTON CODES TO SIEMENS PART NUMBERS

APS ORDER CODE	SIEMENS PART NUMBER
CONBM-01	3SU14002AA101CA0
CONBM-10	3SU14002AA101BA0
CONPM-01	3SU14001AA101CA0
CONPM-10	3SU14001AA101BA0
CONPM-11	3SU14001AA101FA0
CONPM-ESTOP	3SU14001AA101HA0
ENC-M-ESTOP1	3SU18510NA002AA2
ENC-M-ESTOP2	3SU18510NA002AC2
ENC-M-PB1	3SU18510AB002AB1
ENC-M-PB2	3SU18520AB002AB1
ENC-P-ESTOP1	3SU18010NA002AA2
ENC-P-ESTOP2	3SU18010NA002AC2
ENC-P-PB1	3SU18010AB002AB1
ENC-P-PB2	3SU18020AB002AB1
ESTOP-M	3SU11501HB201CG0
ESTOP-P	3SU11001HB201CG0
HOLDER3-M	3SU15500AA100AA0
HOLDER3-P	3SU15000AA100AA0
IND-M-110-BLU	3SU11536AA501AA0
IND-M-110-CLR	3SU11536AA701AA0
IND-M-110-GRN	3SU11536AA401AA0
IND-M-110-RED	3SU11536AA201AA0
IND-M-110-WHT	3SU11536AA601AA0
IND-M-110-YLW	3SU11536AA301AA0
IND-M-230-BLU	3SU11566AA501AA0
IND-M-230-CLR	3SU11566AA701AA0
IND-M-230-GRN	3SU11566AA401AA0
IND-M-230-RED	3SU11566AA201AA0
IND-M-230-WHT	3SU11566AA601AA0
IND-M-230-YLW	3SU11566AA301AA0
IND-M-24-BLU	3SU11526AA501AA0
IND-M-24-CLR	3SU11526AA701AA0
IND-M-24-GRN	3SU11526AA401AA0
IND-M-24-RED	3SU11526AA201AA0
IND-M-24-WHT	3SU11526AA601AA0
IND-M-24-YLW	3SU11526AA301AA0
IND-M30-BLU	3SU10610JD500AA0
IND-M30-CLR	3SU10610JD700AA0
IND-M30-GRN	3SU10610JD400AA0
IND-M30-RED	3SU10610JD200AA0
IND-M30-YLW	3SU10610JD300AA0
IND-P-110-BLU	3SU11036AA501AA0
IND-P-110-CLR	3SU11036AA701AA0
IND-P-110-GRN	3SU11036AA401AA0
IND-P-110-RED	3SU11036AA201AA0
IND-P-110-WHT	3SU11036AA601AA0
IND-P-110-YLW	3SU11036AA301AA0
IND-P-230-BLU	3SU11066AA501AA0
IND-P-230-CLR	3SU11066AA701AA0
IND-P-230-GRN	3SU11066AA401AA0
IND-P-230-RED	3SU11066AA201AA0

APS ORDER CODE	SIEMENS PART NUMBER
IND-P-230-WHT	3SU11066AA601AA0
IND-P-230-YLW	3SU11066AA301AA0
IND-P-24-BLU	3SU11026AA501AA0
IND-P-24-CLR	3SU11026AA701AA0
IND-P-24-GRN	3SU11026AA401AA0
IND-P-24-RED	3SU11026AA201AA0
IND-P-24-WHT	3SU11026AA601AA0
IND-P-24-YLW	3SU11026AA301AA0
LABEL BLANK	3SU19000AC160AA0
LEDBM-110-BLU	3SU14012BC501AA0
LEDBM-110-GRN	3SU14012BC401AA0
LEDBM-110-RED	3SU14012BC201AA0
LEDBM-110-WHT	3SU14012BC601AA0
LEDBM-110-YLW	3SU14012BC301AA0
LEDBM-230-BLU	3SU14012BF501AA0
LEDBM-230-GRN	3SU14012BF401AA0
LEDBM-230-RED	3SU14012BF201AA0
LEDBM-230-WHT	3SU14012BF601AA0
LEDBM-230-YLW	3SU14012BF301AA0
LEDBM-24-BLU	3SU14012BB501AA0
LEDBM-24-GRN	3SU14012BB401AA0
LEDBM-24-RED	3SU14012BB201AA0
LEDBM-24-WHT	3SU14012BB601AA0
LEDBM-24-YLW	3SU14012BB301AA0
LEDPM-110-BLU	3SU14011BC501AA0
LEDPM-110-GRN	3SU14011BC401AA0
LEDPM-110-RED	3SU14011BC201AA0
LEDPM-110-WHT	3SU14011BC601AA0
LEDPM-110-YLW	3SU14011BC301AA0
LEDPM-230-BLU	3SU14011BF501AA0
LEDPM-230-GRN	3SU14011BF401AA0
LEDPM-230-RED	3SU14011BF201AA0
LEDPM-230-WHT	3SU14011BF601AA0
LEDPM-230-YLW	3SU14011BF301AA0
LEDPM-24-BLU	3SU14011BB501AA0
LEDPM-24-GRN	3SU14011BB401AA0
LEDPM-24-RED	3SU14011BB201AA0
LEDPM-24-WHT	3SU14011BB601AA0
LEDPM-24-YLW	3SU14011BB301AA0
LHOLDER	3SU19000AN100AA0
PBI-M-110-BLU	3SU11530AB501BA0
PBI-M-110-GRN	3SU11530AB401BA0
PBI-M-110-RED	3SU11530AB201CA0
PBI-M-110-WHT	3SU11530AB601BA0
PBI-M-110-YLW	3SU11530AB301BA0
PBI-M-230-BLU	3SU11560AB501BA0
PBI-M-230-GRN	3SU11560AB401BA0
PBI-M-230-RED	3SU11560AB201CA0
PBI-M-230-WHT	3SU11560AB601BA0
PBI-M-230-YLW	3SU11560AB301BA0
PBI-M-24-BLU	3SU11520AB501BA0

APS ORDER CODE	SIEMENS PART NUMBER
PBI-M-24-GRN	3SU11520AB401BA0
PBI-M-24-RED	3SU11520AB201CA0
PBI-M-24-WHT	3SU11520AB601BA0
PBI-M-24-YLW	3SU11520AB301BA0
PBI-M30-BLU	3SU10610JB500AA0
PBI-M30-CLR	3SU10610JB700AA0
PBI-M30-GRN	3SU10610JB400AA0
PBI-M30-RED	3SU10610JB200AA0
PBI-M30-YLW	3SU10610JB300AA0
PBI-P-110-BLU	3SU11030AB501BA0
PBI-P-110-GRN	3SU11030AB401BA0
PBI-P-110-RED	3SU11030AB201CA0
PBI-P-110-WHT	3SU11030AB601BA0
PBI-P-110-YLW	3SU11030AB301BA0
PBI-P-230-BLU	3SU11060AB501BA0
PBI-P-230-GRN	3SU11060AB401BA0
PBI-P-230-RED	3SU11060AB201CA0
PBI-P-230-WHT	3SU11060AB601BA0
PBI-P-230-YLW	3SU11060AB301BA0
PBI-P-24-BLU	3SU11020AB501BA0
PBI-P-24-GRN	3SU11020AB401BA0
PBI-P-24-RED	3SU11020AB201CA0
PBI-P-24-WHT	3SU11020AB601BA0
PBI-P-24-YLW	3SU11020AB301BA0
PB-M30- BLK	3SU10600JB100AA0
PB-M30-BLU	3SU10600JB500AA0
PB-M30-GRN	3SU10600JB400AA0
PB-M30-RED	3SU10600JB200AA0
PB-M30-WHT	3SU10600JB600AA0
PB-M30-YLW	3SU10600JB300AA0
PB-M-BLK	3SU11500AB101BA0
PB-M-BLU	3SU11500AB501BA0
PB-M-GRN	3SU11500AB401BA0
PB-M-RED	3SU11500AB201CA0
PB-M-WHT	3SU11500AB601BA0
PB-M-YLW	3SU11500AB301BA0
PB-P-BLK	3SU11000AB101BA0
PB-P-BLU	3SU11000AB501BA0
PB-P-GRN	3SU11000AB401BA0
PB-P-RED	3SU11000AB201CA0
PB-P-WHT	3SU11000AB601BA0
PB-P-YLW	3SU11000AB301BA0
SEL2-M30	3SU10622DF600AA0
SEL2-M-NO	3SU11502BF601BA0
SEL2-M-NO+NC	3SU11502BF601MA0
SEL2-P-NO	3SU11002BF601BA0
SEL2-P-NO+NC	3SU11002BF601MA0
SEL3-M30	3SU10622DL600AA0
SEL3-M-NO	3SU11502BL601NA0
SEL3-P-NO	3SU11002BL601NA0

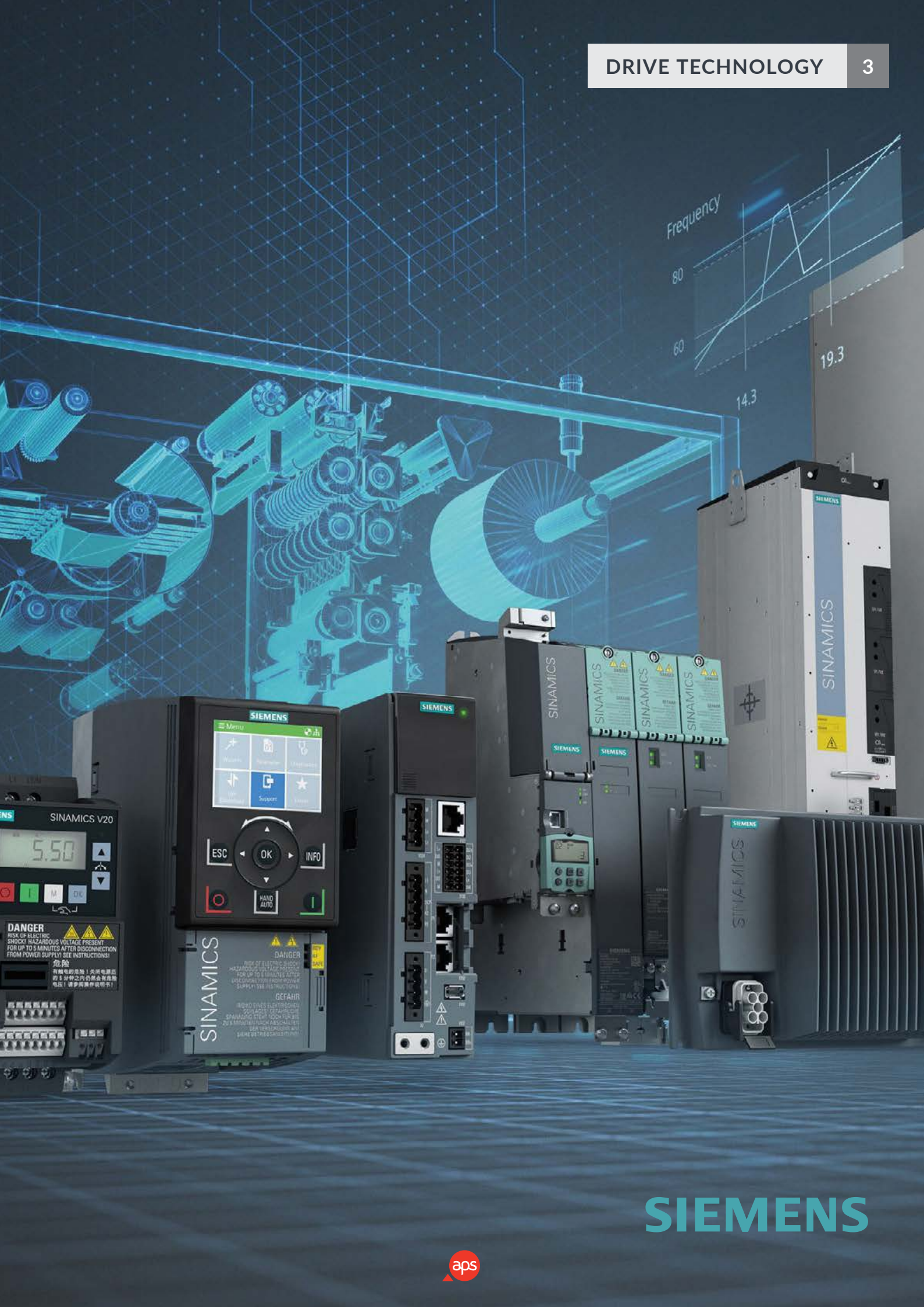
Frequency
80
60
19.3
14.3
SIEMENS
SINAMICS V20
5.50
ESC
OK
INFO
HAND AUTO
SINAMICS
DANGER
GEFAHR

SIEMENS

SOFT STARTERS - SIRIUS 3RW



SIRIUS 3RW soft starters are a cost-effective alternative to using direct or star-delta starters for starting three-phase motors. They avoid undesirable side effects such as mechanical stresses or voltage drops in the mains supply.
The soft start in control cabinets can be implemented in almost any application in a simple and practical way with our complete soft starter range.



Normal starting (class 10)



APPLICATION	STANDARD APPLICATIONS			HIGH-FEATURE APPLICATIONS	
	3RW30	3RW40/50	3RW52	3RW44	3RW55
Pumps	●	●	●	●	●
Pumps with special pump ramp-down (to prevent water hammer)			○	●	●
Heat pumps	●	●	●	●	●
Hydraulic pumps	○	●	●	●	●
Presses	○	●	●	●	●
Conveyor belts	○	●	●	●	●
Roller conveyors	○	●	●	●	●
Screw conveyors	○	●	●	●	●
Escalators		●	●	●	●
Piston compressors		●	●	●	●
Screw compressors		●	●	●	●
Small fans[1)]		●	●	●	●
Centrifugal blowers		●	●	●	●
Bow thrusters		●	●	●	●

Heavy starting (class 20)

Stirrer		○	○	●	●
Extruders		○	○	●	●
Lathes		○	○	●	●
Milling machines		○	○	●	●

Very heavy starting (class 30)



Large fans[2)]				●	●
Circular saws/bandsaws				●	●
Centrifuges				●	●
Mills				●	●
Breakers				●	●

● Recommended soft starter
○ Possible soft starter
1) The mass inertia of the fan is < 10 times the mass inertia of the motor
2) The mass inertia of the fan is ≥ 10 times the mass inertia of the motor

3RW30, 40 AND 50 SOFT STARTERS TWO PHASE CONTROL



3RW30 soft starters with built-in bypass contactor

AMPS AT 40 DEG C	PART NUMBER	AUXILIARY VOLTAGE	KW	SIZE
9	3RW3016-1BB14	110/240VAC	4	0
12.5	3RW3017-1BB14	110/240VAC	5.5	0
17.6	3RW3018-1BB14	110/240VAC	7.5	0
25	3RW3026-1BB14	110/240VAC	11	0
32	3RW3027-1BB14	110/240VAC	15	0
38	3RW3028-1BB14	110/240VAC	18.5	0

Note: Available Up To 55KW. 24VAC/DC Auxiliary Supply Is Also Available.



3RW40 soft starters with built-in bypass contactor & overload

12.5	3RW4024-1BB14	110/240VAC	5.5	0
25	3RW4026-1BB14	110/240VAC	11	0
32	3RW4027-1BB14	110/240VAC	15	0
38	3RW4028-1BB14	110/240VAC	18.5	0
45	3RW4036-1BB14	110/240VAC	22	2
63	3RW4037-1BB14	110/240VAC	30	2
72	3RW4038-1BB14	110/240VAC	37	2
80	3RW4046-1BB14	110/240VAC	45	3
106	3RW4047-1BB14	110/240VAC	55	3

Note: 24VAC/DC Auxiliary Supply Is Also Available - Change BB14 To BB04.



3RW50 soft starters with built-in bypass contactor, overload and thermistor protection

143	3RW5055-6TB14	110/240VAC	75	6
171	3RW5056-6TB14	110/240VAC	90	6
210	3RW5072-6TB14	110/240VAC	110	12
250	3RW5073-6TB14	110/240VAC	132	12
315	3RW5074-6TB14	110/240VAC	160	12
370	3RW5075-6TB14	110/240VAC	200	12
470	3RW5076-6TB14	110/240VAC	250	12
570	3RW5077-6TB14	110/240VAC	315	12

Note: Soft Starters Available Up To 710KW or 1200KW Inside Delta.

Covers for soft starters



PART NUMBER	SIZE
Terminal Covers For Box Terminals (2 Required Per Device)	
3RT1936-4EA2	2
3RT1946-4EA2	3
3RT1956-4EA2	6
3RT1966-4EA2	12
Terminal Covers For Cable Lugs & Busbar (2 Required Per Device)	
3RT1946-4EA1	3
3RT1956-4EA1	6
3RT1966-4EA1	12

3RW52 SOFT STARTERS

SIRIUS 3RW52 soft starters provide true 3 phase control combined with minimal heat dissipation. As with all SIRIUS soft starters in-built bypass is included. Simple control allow for fast setup of motor start/stop as well as protection parameters. The 3RW52 can be ordered with either thermistor input or an analogue output.

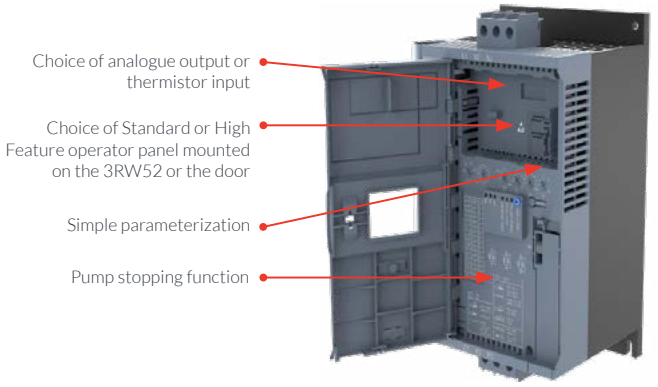

TYPE	3RW521	3RW522	3RW523	3RW524
Installation dimensions (W x H x D)mm 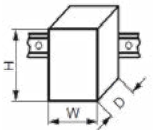	Frame Size 1 170 x 275 x 152	Frame Size 2 185 x 306 x 203	Frame Size 3 185 x 306 x 203	Frame Size 4 210 x 393 x 203



AMPS AT 40 DEG C	INLINE CIRCUIT kW RATING	FRAME SIZE	PART NUMBER
13	5.5	1	3RW5213-1 ◆ C ◆ 4
18	7.5	1	3RW5214-1 ◆ C ◆ 4
25	11	1	3RW5215-1 ◆ C ◆ 4
32	15	1	3RW5216-1 ◆ C ◆ 4
38	18.5	1	3RW5217-1 ◆ C ◆ 4
47	22	2	3RW5224-1 ◆ C ◆ 4
63	30	2	3RW5225-1 ◆ C ◆ 4
77	37	2	3RW5226-1 ◆ C ◆ 4
93	45	2	3RW5227-1 ◆ C ◆ 4

With analogue output	A	
With thermistor input	T	
24VAC/DC Control Voltage		0
110...250VAC Control Voltage		1



113	55	3	3RW5234-6	◆ C ◆ 4
143	75	3	3RW5235-6	◆ C ◆ 4
171	90	3	3RW5236-6	◆ C ◆ 4
210	110	4	3RW5243-6	◆ C ◆ 4
250	132	4	3RW5244-6	◆ C ◆ 4
315	160	4	3RW5245-6	◆ C ◆ 4
370	200	4	3RW5246-6	◆ C ◆ 4
470	250	4	3RW5247-6	◆ C ◆ 4
570	315	4	3RW5248-6	◆ C ◆ 4

With analogue output	A	
With thermistor input	T	
24VAC/DC Control Voltage		0
110...250VAC Control Voltage		1

Thermistor input units stocked.

3RW55 SOFT STARTERS

SIRIUS 3RW55 is a high feature soft starter offering maximum flexibility for motor starting applications. As with all SIRIUS soft starters in-built bypass is included. To ensure correct setup, this softstarter includes an auto paramerterization feature which optimizes the parameters with every start. This enures soft and smooth starting every time.

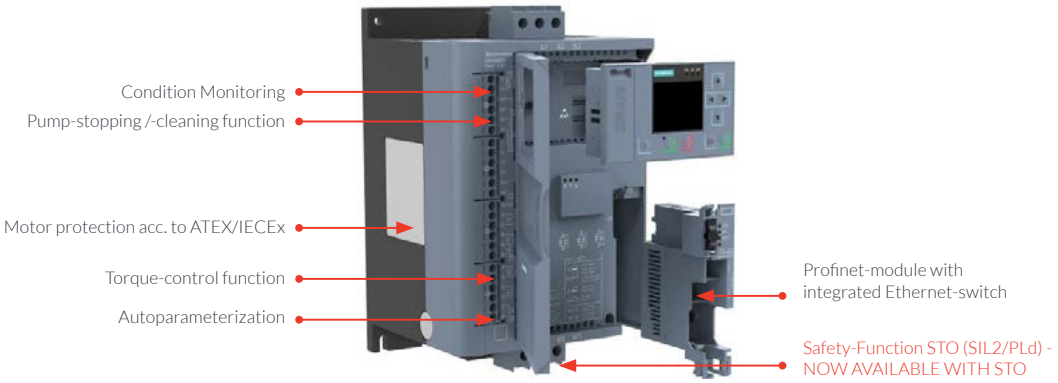

TYPE	3RW551.	3RW552 / 53.	3RW554.	3RW555.
Installation dimensions (W x H x D)mm 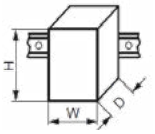	Frame Size 1 170 x 275 x 152	Frame Size 2/3 185 x 306 x 203	Frame Size 4 210 x 393 x 203	Frame Size 5 478 x 764 x 241



AMPS AT 40 DEG C	INLINE CIRCUIT kW RATING	FRAME SIZE	PART NUMBER
13	5.5	1	3RW5513-1HA◆4
18	7.5	1	3RW5514-1HA◆4
25	11	1	3RW5515-1HA◆4
32	15	1	3RW5516-1HA◆4
38	18.5	1	3RW5517-1HA◆4
47	22	2	3RW5524-1HA◆4
63	30	2	3RW5525-1HA◆4
77	37	2	3RW5526-1HA◆4
93	45	2	3RW5527-1HA◆4
113	55	3	3RW5534-6HA◆4
143	75	3	3RW5535-6HA◆4
171	90	3	3RW5536-6HA◆4
210	110	4	3RW5543-6HA◆4
250	132	4	3RW5544-6HA◆4
315	160	4	3RW5545-6HA◆4
370	200	4	3RW5546-6HA◆4
470	250	4	3RW5547-6HA◆4
570	315	4	3RW5548-6HA◆4
630	355	5	3RW5552-6HA◆4
720	400	5	3RW5553-6HA◆4
840	450	5	3RW5554-6HA◆4
1100	560	5	3RW5556-6HA◆4
1280	710	5	3RW5558-6HA◆4



Article No. supplement for rated control supply voltage		
24VAC/DC	**0**	
110...250VAC	**1**	

3RW5 ACCESSORIES

PART NUMBER	DESCRIPTION

Communications modules





3RW5980-0CP00	Profibus
3RW5980-0CS00	Profinet standard
3RW5980-0CH00	Profinet High - Feature with integrated switch
3RW5980-0CE00	Ethernet IP
3RW5980-0CT00	Modbus TCP
3RW5980-0CR00	Modbus RTU

HMI modules and connection cables




3RW5980-0HF00	HMI high feature HMI with colour LCD display for softstarter control and monitoring of all measured variables and faults. Can be mounted on the softstarter or on cabinet door
3RW5980-0HL00	Interface cover (spare part)
3RW5980-0HS00	HMI standard (for 3RW52 Only) HMI with LED display for softstarter control and monitoring. Can be mounted on the 3RW52 softstarter or on cabinet door
3RW5980-0HD00	Door monitng kit IP65
3ZY1311-0AA00	Push in lugs for wall mounting (qty 2 required)

Terminal covers



3RW5983-0TC20	3RW552, 3RW553 (qty 2 required)
3RW5984-0TC20	3RW554 (qty 2 required)

Housing parts



3RW5954-0GF00	Front cover frame size 4
3RW5950-0GL20	Hinged door without cut out
3RW5950-0GL30	Hinged door with cut out for HF HMI
3RW5950-0GL40	Hinged door with cut out for Standard HMI (3RW52)
3RW5950-0GD20	Control-circuit duct cover

Fans



3RW5983-0FF00 *	Fan for frame size 1, 2 and 3
3RW5984-0FF00 *	Fan for frame size 4
3RW5983-0FC00 *	Fan cover for frame size 1, 2 and 3
3RW5984-0FC00 *	Fan cover for frame size 4

* Refer to manual for quantity required for each 3RW softstarter

SINAMICS V20 SERIES COMPACT VARIABLE SPEED DRIVES



Voltage / Frequency 1AC: 1-phase 200–240 V ±10 %, 47-63 Hz
Voltage / Frequency 3AC: 3-phase 380–480 V ±10 %, 47-63 Hz
Power Range: 1AC 0.12kW - 3kW; 3AC 0.37kW - 15kW
Degree of Protection: IP20
Overload power: 150% x I for 60s and then 94.5% x I for 240s (average 100% rated)
Ambient temperature: 0° to 40 °C without derating/up to 60 °C with derating
EMV: Acc. to IEC 61800-3, Category 2 for AC1 and Class 3 for AC3
Motor cable lengths: 25 m shielded/50 m unshielded
Standards: CE, UL, C-tick
Signal inputs/outputs: Varied, dependant on choice of control unit.
Control modes: V/f, V/f ECO, V^2/f, V/f Multi-point
Function: Fixed velocity/speed setpoint, 2/3 wire control, PID controller, motor holding brake control
Braking (0.12kW to 5.5kW): Braking unit available as spare part
Braking (7.5kW to 15kW): Brake chopper built in.

Siemens SINAMICS V20 Series Drives

Includes integrated EMC filter, Basic Operator Panel and Modbus communication.

kW Rating	INPUT CURRENT	PART NUMBER	DESCRIPTION
Siemens SINAMICS V20 Series VSD with 1AC , 230V input and integrated category 2 EMC filter			
0.12kW	0.9A	6SL3210-5BB11-2BV1	V20VSD 1AC 230V, 0.12KW, EMC Filter
0.25kW	1.7A	6SL3210-5BB12-5BV1	V20VSD 1AC 230V, 0.25KW, EMC Filter
0.37kW	2.3A	6SL3210-5BB13-7BV1	V20VSD 1AC 230V, 0.37KW, EMC Filter
0.55kW	3.2A	6SL3210-5BB15-5BV1	V20VSD 1AC 230V, 0.55KW, EMC Filter
0.75kW	3.9A	6SL3210-5BB17-5BV1	V20VSD 1AC 230V, 0.75KW, EMC Filter
1.1kW	6A	6SL3210-5BB21-1BV1	V20VSD 1AC 230V, 1.1KW, EMC Filter
1.5kW	7.8A	6SL3210-5BB21-5BV1	V20VSD 1AC 230V, 1.5KW, EMC Filter
2.2kW	11A	6SL3210-5BB22-2AV0	V20VSD 1AC 230V, 2.2KW, EMC Filter
3kW	13.6A	6SL3210-5BB23-0AV0	V20VSD 1AC 230V, 3KW, EMC Filter
Siemens SINAMICS V20 Series VSD with 3AC, 400V input and integrated category 3 EMC filter			
0.37kW	1.3A	6SL3210-5BE13-7CV0	V20VSD 3AC 400V, 0.37KW, EMC Filter
0.55kW	1.7A2.2A	6SL3210-5BE15-5CV0	V20VSD 3AC 4000V, 0.55KW, EMC Filter
0.75kW	3.1A	6SL3210-5BE17-5CV0	V20VSD 3AC 400V, 0.8KW, EMC Filter
1.1kW	3.1A	6SL3210-5BE21-1CV0	V20VSD 3AC 400V, 1.1KW, EMC Filter
1.5kW	4.1A	6SL3210-5BE21-5CV0	V20VSD 3AC 400V, 1.5KW, EMC Filter
2.2kW	4.8A	6SL3210-5BE22-2CV0	V20VSD 3AC 400V, 2.2KW, EMC Filter
3kW	7.3A	6SL3210-5BE23-0CV0	V20VSD 3AC 400V, 3KW, EMC Filter
4kW	8.24A	6SL3210-5BE24-0CV0	V20VSD 3AC 400V, 4KW, EMC Filter
5.5kW	11A	6SL3210-5BE25-5CV0	V20VSD 3AC 400V, 5.5KW, EMC Filter
7.5kW	16.5A	6SL3210-5BE27-5CV0	V20VSD 3AC 400V, 7.5KW, EMC Filter
11kW	21A	6SL3210-5BE31-1CV0	V20VSD 3AC 400V, 11KW, EMC Filter
15kW	31A	6SL3210-5BE31-5CV0	V20VSD 3AC 400V, 15KW, EMC Filter
22kW	54A	6SL3210-5BE31-8CV0	V20VSD 3AC 400V, 22KW, EMC Filter
30kW	72A	6SL3210-5BE32-2CV0	V20VSD 3AC 400V, 22KW, EMC Filter

Operator accessories for SINAMICS V20 Drives

PL		6SL3255-0VE00-0UA1	Parameter Loader For V20
BOP		6SL3255-0VA00-2AA1	BOP Interface For Door Mount BOP
BOP		6SL3255-0VA00-4BA1	Door Mount BOP
RS485		6SL3255-0VC00-0HA0	RS485 Terminators (50PCS)
MEM		6SL3054-4AG00-2AA0	Memory Card For V20
MEM		6SL3054-4AG00-2AA0	Memory Card For V20

G120X VARIABLE SPEED DRIVES

The new frequency converter comes as a complete product series – standardized and seamless when it comes to all supply voltages and supply types, and available in a power range extending from 0.75 kW to 630 kW. The devices are in compliance with global EMC standards and motor cable lengths of up to 150 m are permissible while maintaining EMC limit values. The integrated Safe Torque Off (STO) safety function is certified according to SIL3.

Thanks to its rugged design with optional protection against dripping water, SINAMICS G120X can be used in harsh conditions. The frequency converter can also be operated under environmental conditions according to the 3C3 standard.

Voltage / Power range	3AC 380V - 480V, -20% / +10%, 0.75 - 560 kW
Frequency	47 / 63 Hz +/- 5%
Control Modes	V/F (linear, square law, FCC, ECO), sensorless vector control (SLVC)
Communications	PROFINET, PROFIBUS*, EtherNet/IP, Modbus RTU/USS*,BACnet MS/TP*, Wi-Fi via Smart Access Module * in preparation (2019)

G120X 3 phase 380 – 480 VAC

PART NUMBER	FRAME SIZE	INPUT CURRENT	DESCRIPTION
0.75 - 3.0 KW FSA			
6SL3220-3YE10-0AF0	FSA	2.1A	0.75 kW At 110% 60s, 100% 240 s - FSA
6SL3220-3YE12-0AF0	FSA	2.8A	1.1 kW At 110% 60s, 100% 240 s - FSA
6SL3220-3YE14-0AF0	FSA	3.6A	1.5 kW At 110% 60s, 100% 240 s - FSA
6SL3220-3YE16-0AF0	FSA	5.5A	2.2 kW At 110% 60s, 100% 240 s - FSA
6SL3220-3YE18-0AF0	FSA	6.9A	3.0 kW At 110% 60s, 100% 240 s - FSA
4.0 KW - 7.5 KW FSB			
6SL3220-3YE20-0AF0	FSB	9.8A	4.0 kW At 110% 60s, 100% 240 s - FSB
6SL3220-3YE22-0AF0	FSB	12A	5.5 kW At 110% 60s, 100% 240 s - FSB
6SL3220-3YE24-0AF0	FSB	17A	7.5 kW At 110% 60s, 100% 240 s - FSB
11 KW - 15 KW FSC			
6SL3220-3YE26-0AF0	FSC	24.5A	11 kW At 110% 60s, 100% 240 s - FSC
6SL3220-3YE28-0AF0	FSC	29.5A	15 kW At 110% 60s, 100% 240 s - FSC
18.5 KW - 37 KW FSD			
6SL3220-3YE30-0AF0	FSD	37A	18.5 kW At 110% 60s, 100% 240 s - FSD
6SL3220-3YE32-0AF0	FSD	44A	22 kW At 110% 60s, 100% 240 s - FSD
6SL3220-3YE34-0AF0	FSD	59A	30 kW At 110% 60s, 100% 240 s - FSD
6SL3220-3YE36-0AF0	FSD	72A	37 kW At 110% 60s, 100% 240 s - FSD
45 - 55 KW FSE			
6SL3220-3YE38-0AF0	FSE	89A	45 kW At 110% 60s, 100% 240 s - FSE
6SL3220-3YE40-0AF0	FSE	107A	55 kW At 110% 60s, 100% 240 s - FSE
75 - 132 KW FSF			
6SL3220-3YE42-0AF0	FSF	144A	75 kW At 110% 60s, 100% 240 s - FSF
6SL3220-3YE44-0AF0	FSF	177A	90 kW At 110% 60s, 100% 240 s - FSF
6SL3220-3YE46-0AF0	FSF	203A	110 kW At 110% 60s, 100% 240 s - FSF
6SL3220-3YE48-0AF0	FSF	247A	132 kW At 110% 60s, 100% 240 s - FSF

Note: Available up to 560 kW.



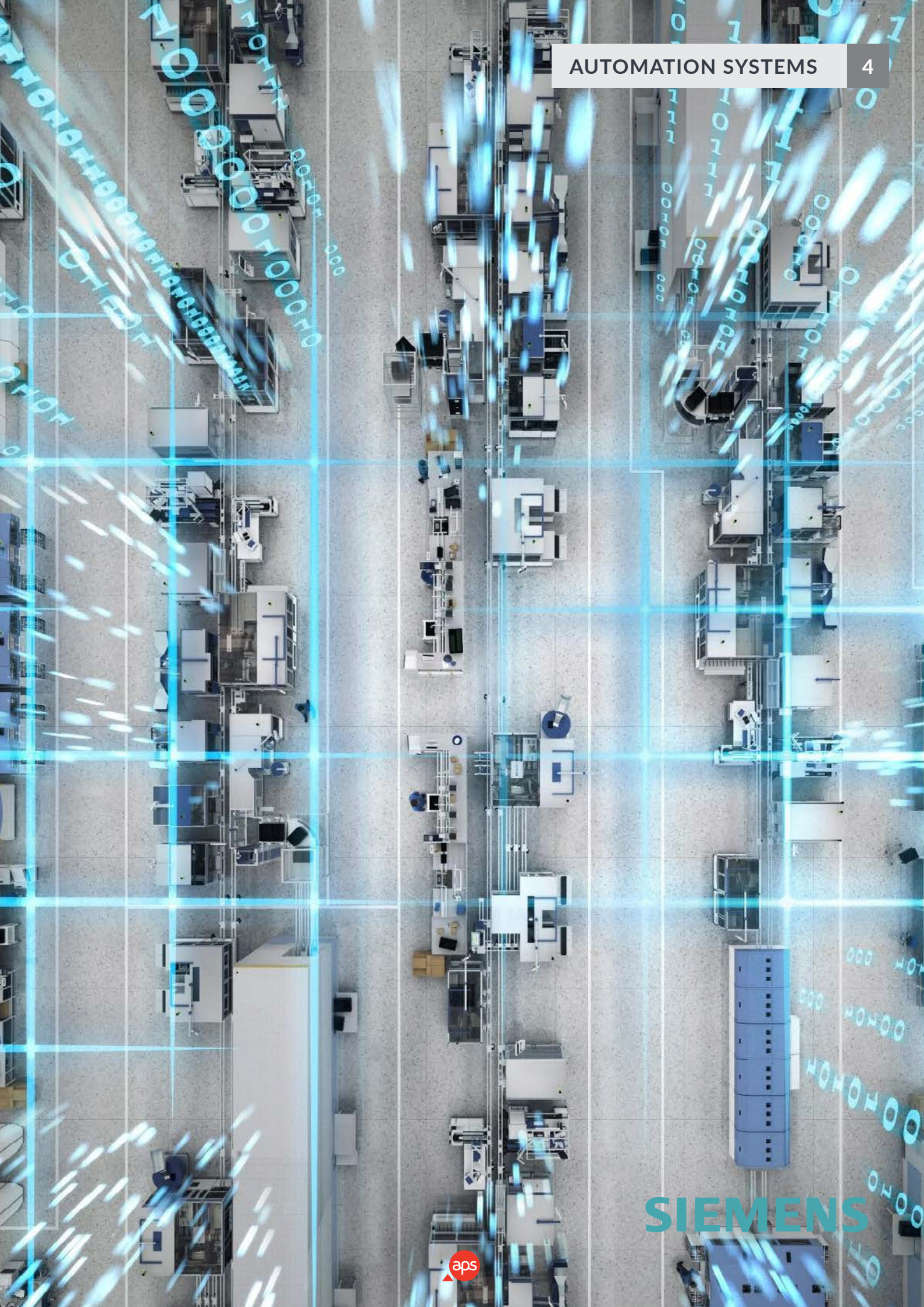

SIEMENS

LOGO! 8 LOGIC MODULE

PART NUMBER	DESCRIPTION	POWER	INPUTS	OUTPUTS
LOGO! 8 basic units - basic with 6-line LCD display and cursor keys, ethernet interface				
				
6ED1052-1CC08-0BA0	LOGO! 24 CE	24VDC	DI8: of which 4 can be AI (0-10V)	4DO (0.3A transistor)
6ED1052-1MD08-0BA0	LOGO! 12/24 RCE	12-24VDC	DI8: of which 4 can be AI (0-10V)	4DO (10A relay)
6ED1052-1HB08-0BA0	LOGO! 24 RCE	24V AC/DC	DI8	4DO (10A relay)
6ED1052-1FB08-0BA0	LOGO! 230 RCE	115-230V AC/DC	DI8	4DO (10A relay)
LOGO! 8 basic units - pure without LCD display and without cursor keys, ethernet interface				
				
6ED1052-2CC08-0BA0	LOGO! 24 CEo	24VDC	DI8: of which 4 can be AI (0-10V)	4DO (0.3A transistor)
6ED1052-2MD08-0BA0	LOGO! 12/24 RCEo	12-24VDC	DI8: of which 4 can be AI (0-10V)	4DO (10A relay)
6ED1052-2HB08-0BA0	LOGO! 24 RCEo	24V AC/DC	DI8	4DO (10A relay)
6ED1052-2FB08-0BA0	LOGO! 230 RCEo	115-230V AC/DC	DI8	4DO (10A relay)
LOGO! 8 expansion units - digital I/O expansion units for adding to LOGO! 8 basic units				
				
6ED1055-1CB00-0BA2	-	24VDC	DI4	DO4 (0.3A tranisitor)
6ED1055-1MB00-0BA2	-	12-24VDC	DI4	DO4 (5A relay)
6ED1055-1HB00-0BA2	-	24V AC/DC	DI4	DO4 (5A relay)
6ED1055-1FB00-0BA2	-	115-230V AC/DC	DI4	DO4 (5A relay)
6ED1055-1CB10-0BA2	-	24VDC	DI8	DO8 (0.3A tranisitor)
6ED1055-1NB10-0BA2	-	24VDC	DI8	DO8 (5A relay)
6ED1055-1FB10-0BA2	-	115-230V AC/DC	DI8	DO8 (5A relay)
LOGO! 8 expansion units - analog I/O expansion units for adding to LOGO! 8 basic units				
				
6ED1055-1MA00-0BA2	LOGO! AM2	12-24VDC	2AI, 0-10V or 0/4-20mA	-
6ED1055-1MD00-0BA2	LOGO! AM2 RTD	12-24VDC	2AI, -50 to 200 Deg C (Pt100/1000)	-
6ED1055-1MM00-0BA2	LOGO! AM2 AQ	24VDC	-	2AO, 0-10V or 0/4-20mA

PART NUMBER	DESCRIPTION
LOGO! 8 Accessories - software, text display, communication/networking, antennas	
	
6ED1058-0BA08-0YA1	LOGO! SoftComfort V8.2 For Windows 10,8,7,XP,Linux and Mac OS X; on DVD backward compatible
6ED1055-4MH08-0BA0	LOGO! TDE Text Display HMI
6GK7177-1MA20-0AA0	LOGO! CSM 12/24 4 x RJ45 Port Ethernet switch
6GK7142-7EX00-0AX0	LOGO! CMR2040 Communication module for connecting to GSM/GPRS
6GK5895-6ML00-0AA0	ANT985-6ML GPS antenna with N connect female connector for reception of GPS data
6XV1875-5LH50	Flexible connecting cable with N connect/SMA male for linking GPS antenna and CMR
6NH9860-1AA00	ANT794-4MR Rod antenna for establishing a mobile connection via the CMR

S7-1200 BASIC CONTROLLERS

PART NUMBER	DESCRIPTION

Standard CPUs

CPU 1211C - 50 KB program memory, DI 6 x 24 V DC, DQ 4 x 24 V DC
or 4 x RLY, AI 2 x 0–10 V DC



6ES7211-1AE40-0XB0	DC/DC/DC
6ES7211-1BE40-0XB0	AC/DC/RLY
6ES7211-1HE40-0XB0	DC/DC/RLY

CPU 1212C - 75 KB program memory, DI 8 x 24 V DC, DQ 6 x 24 V DC
or 6 x RLY, AI 2 x 10 bits 0–10 V DC



6ES7212-1AE40-0XB0	DC/DC/DC
6ES7212-1BE40-0XB0	AC/DC/RLY
6ES7212-1HE40-0XB0	DC/DC/RLY

CPU 1214C - 100 KB program memory, DI 14 x 24 V DC, DQ 10 x 24 V DC
or 10 x RLY, AI 2 x 0–10 V DC



6ES7214-1AG40-0XB0	DC/DC/DC
6ES7214-1BG40-0XB0	AC/DC/RLY
6ES7214-1HG40-0XB0	DC/DC/RLY

CPU 1215C - 125 KB program memory, DI 14 x 24 V DC, DQ 10 x 24 V DC or 10 x RLY,
AI 2 x 0–10 V DC, AQ 2 x 0–20 mA DC, 2 x PROFINET Port



6ES7215-1AG40-0XB0	DC/DC/DC
6ES7215-1BG40-0XB0	AC/DC/RLY
6ES7215-1HG40-0XB0	DC/DC/RLY

CPU 1217C - 150 KB program memory, DI 10 x 24 V DC, DI 4 x RS422/485, DQ 6 x 24 V DC,
DQ 4 x RS422/485, AI 2 x 0–10 V DC, AQ 2 x 0–20 mA, 2 x PROFINET Port



6ES7217-1AG40-0XB0	DC/DC/DC

Failsafe CPUs

CPU 1212FC - 100 KB program memory, DI 8 x 24 V DC, DQ 6 x 24 V DC or 6 x RLY, AI 2 x 10 bits 0–10 V DC

6ES7212-1AF40-0XB0	DC/DC/DC
6ES7212-1HF40-0XB0	DC/DC/RLY

CPU 1214FC - 125 KB program memory, DI 14 x 24 V DC, DQ 10 x 24 V DC
or 10 x RLY, AI 2 x 0–10 V DC

6ES7214-1AF40-0XB0	DC/DC/DC
6ES7214-1HF40-0XB0	DC/DC/RLY

CPU 1215FC - 150 KB program memory, DI 14 x 24 V DC, DQ 10 x 24 V DC
or 10 x RLY, AI 2 x 0–10 V DC, AQ 2 x 0–20 mA DC, 2 x PROFINET Port



6ES7215-1AF40-0XB0	DC/DC/DC
6ES7215-1HF40-0XB0	DC/DC/RLY

S7-1200 BASIC CONTROLLERS I/O

PART NUMBER	DESCRIPTION

Signal modules – digital



6ES7221-1BF32-0XB0	DI 8 x 24 V DC
6ES7221-1BH32-0XB0	DI 16 x 24 V DC
6ES7222-1BF32-0XB0	DQ 8 x 24 V DC 0.5 A
6ES7222-1BH32-0XB0	DQ 16 x 24 V DC 0.5 A
6ES7222-1HF32-0XB0	DQ 8 x RLY 30 V DC/250 V AC 2 A
6ES7222-1HH32-0XB0	DQ 16 x RLY 30 V DC/250 V AC 2 A
6ES7222-1XF32-0XB0	DQ 8 x RLY Switchable 30 V DC/250 V AC 2 A
6ES7223-1BH32-0XB0	DI/DQ 8 x 24 V DC / 8 x 24 V DC 0.5 A
6ES7223-1BL32-0XB0	DI/DQ 16 x 24 V DC / 16 x 24 V DC 0.5 A
6ES7223-1PH32-0XB0	DI/DQ 8 x 24 V DC / 8 x RLY 30 V DC, 250 V AC 2 A
6ES7223-1PL32-0XB0	DI/DQ 16 x 24 V DC / 16 x RLY 30 V DC, 250 V AC 2 A
6ES7223-1QH32-0XB0	DI/DQ 8 x 120/250 V AC / 8 x RLY 30 V DC, 250 V AC 2 A

Signal modules – analog



6ES7231-4HF32-0XB0	AI 8 x 13 bits ±10 V DC, ±5 V DC, ±2.5 V DC or 4–20 mA:
6ES7231-5ND32-0XB0	AI 4 x 16 bits ±10 V DC, ±5 V DC, ±2.5 V DC, ±1.25 V DC or 4–20 mA
6ES7231-5PD32-0XB0	AI 4 x RTD x 16 bits
6ES7231-5PF32-0XB0	AI 8 x RTD x 16 bits
6ES7231-5QD32-0XB0	AI 4 x TC x 16 bits
6ES7231-5QF32-0XB0	AI 8 x TC x 16 bits
6ES7232-4HB32-0XB0	AQ 2 x 14 bits ±10 V DC or 4–20 mA
6ES7232-4HD32-0XB0	AQ 4 x 14 bits ±10 V DC or 4–20 mA
6ES7234-4HE32-0XB0	AI/AQ 4 x 13 bits ±10 V DC, ±5 V DC, ±2.5 V DC or 4–20 mA / 2 x 14 bits ±10 V DC or 4–20 mA

Signal modules – fail-safe

6ES7226-6RA32-0XB0	F-DQ RLY 2 x 5 A 30 V DC/250 V AC
6ES7226-6DA32-0XB0	F-DQ 4 x 2 A 24 V DC
6ES7226-6BA32-0XB0	F-DI 16 x 24 V DC

Technology modules

6ES7238-5XA32-0XB0	SM 1238 Energy Meter 480 V AC
6AT8007-1AA10-0AA0	SM 1281 Condition Monitoring
6ES7278-4BD32-0XB0	SM 1278 IO-Link Master

Signal boards – digital

6ES7221-3AD30-0XB0	DI 4 x 5 V DC 200 kHz
6ES7221-3BD30-0XB0	DI 4 x 24 V DC 200 kHz
6ES7222-1AD30-0XB0	DQ 4 x 5 V DC 0.1 A 200 kHz
6ES7222-1BD30-0XB0	DQ 4 x 24 V DC 0.1 A 200 kHz
6ES7223-0BD30-0XB0	DI 2 x 24 V DC/DQ 2 x 24 V DC 0.5 A
6ES7223-3AD30-0XB0	DI 2 x 5 V DC/DQ 2 x 5 V DC 0.1 A 200 kHz
6ES7223-3BD30-0XB0	DI 2 x 24 V DC/DQ 2 x 24 V DC 0.1 A 200 kHz

Signal boards – analog



6ES7232-4HA30-0XB0	AQ 1 x 12 bits ±10 V DC or 0–20 mA
6ES7231-4HA30-0XB0	AI 1 x 12 bits ±10 V DC, ±5 V DC, ±2.5 V DC or 0–20 mA
6ES7231-5PA30-0XB0	AI 1 x RTD x 16 bits, type Platinum (Pt)
6ES7231-5QA30-0XB0	AI 1 x TC x 16 bits, types J, K, voltage range ± 80 mV

S7-1200 COMMUNICATION MODULES & HMI

PART NUMBER	DESCRIPTION

Communication modules

SIMATIC STEP 7 Basic in TIA Portal and CPU 1212C AC/DC/RLY or CPU 1212FC DC/DC/RLY in Package 5



6ES7241-1AH32-0XB0	CM 1241 RS232
6ES7241-1CH32-0XB0	CM 1241 RS422/485
3RK7243-2AA30-0XB0	CM 1243-2 AS-i Master
3RK7271-1AA30-0AA0	DCM 1271 AS-i Data Coupler
6GK7242-5DX30-0XE0	CM 1242-5 PROFIBUS DP-Slave
6GK7243-5DX30-0XE0	CM 1243-5 PROFIBUS DP-Master
6GK7242-7KX31-0XE0	CP 1242-7 GPRS
6GK7243-7KX30-0XE0	CP 1243-7 LTE (EU)
6GK7243-1BX30-0XE0	CP 1243-1 Security (Firewall, VPN), Telecontrol Protocol (DNP3, IEC 60870-5-140, Telecontrol Basic)
6GK7243-8RX30-0XE0	CP 1243-8 IRC Telecontrol Protocols (SINAUT ST7, DNP3, IEC 60870-5-140)
6GT2002-0LA00	Identification RF120C
6ES7241-1CH30-1XB0	CB 1241 RS485 Communication board

Operator control and monitoring



6AV6647-0AH11-3AX0	SIMATIC HMI KP300 Basic Mono 3"-FSTN display, push buttons, black-white four-color backlight
6AV2123-2DB03-0AX0	SIMATIC HMI KTP400 Basic Color 4" widescreen TFT display, touch screen + push buttons, 65,536 colors
6AV2123-2GB03-0AX0	SIMATIC HMI KTP700 Basic Color 7" widescreen TFT display, touch screen + push buttons, 65,536 colors
6AV2123-2JB03-0AX0	SIMATIC HMI KTP900 Basic Color 9" widescreen TFT display, touch screen + push buttons, 65,536 colors
6AV2123-2MB03-0AX0	SIMATIC HMI KTP1200 Basic Color 12" widescreen TFT display, touch screen + push buttons, 65,536 colors

S7-1200 BASIC CONTROLLER ACCESSORIES

PART NUMBER	DESCRIPTION

Engineering framework



6ES7822-0AE06-0YA5	Download - SIMATIC STEP 7 Basic V16
6ES7822-0AA06-0YA5	DVD - SIMATIC STEP 7 Basic V16
6ES7822-0AE00-0YY0	Download - Software Update Service SIMATIC STEP 7 Basic
6ES7822-0AA00-0YL0	DVD - Software Update Service SIMATIC STEP 7 Basic
6ES7822-0AE06-0YE5	Download - Upgrade SIMATIC STEP 7 Basic V11–V14 to V16
6ES7822-0AA06-0YE5	DVD - Upgrade SIMATIC STEP 7 Basic V11–V14 to V16
6ES7833-1FB16-0YH5	Download - SIMATIC STEP 7 Safety Basic V16
6ES7833-1FB16-0YA5	DVD - SIMATIC STEP 7 Safety Basic V16
6ES7833-1FB16-0YK5	Download - Upgrade SIMATIC STEP 7 Safety Basic V13 SP1-V14 to V16
6ES7833-1FB16-0YE5	DVD - Upgrade SIMATIC STEP 7 Safety Basic V13 SP1-V14 to V16

Power supply

6EP1332-1SH71	PM 1207 input: 120/230 V AC, output: DC 24 V/2,5 A

System accessories



6ES7954-8LC03-0AA0	SIMATIC memory card 4 MB
6ES7954-8LE03-0AA0	SIMATIC memory card 12 MB
6ES7954-8LF03-0AA0	SIMATIC memory card 24 MB
6ES7954-8LL03-0AA0	SIMATIC memory card 256 MB
6ES7954-8LP02-0AA0	SIMATIC memory card 2 GB
6ES7954-8LT03-0AA0	SIMATIC memory card 32 GB
6ES7297-0AX30-0XA0	Battery board, long-term backup of the real-time clock/RTC
6ES7290-6AA30-0XA0	Extension cable for signal module, 2 m
6GK7277-1AA10-0AA0	CSM 1277, 4-Port unmanaged Switch, 4 x RJ45, 10/100 Mbit/s

Starter kits S7-1200

SIMATIC STEP 7 Basic in TIA Portal and CPU 1212C AC/DC/RLY or CPU 1212FC DC/DC/RLY in Package 5



6ES7212-1BD34-4YB0	Package 1: SIMATIC S7-1200 Starter Kit
6AV6651-7HA01-3AA4	Package 2: SIMATIC S7-1200 + KP300 Basic Panel Starter Kit
6AV6651-7KA01-3AA4	Package 3: SIMATIC S7-1200 + KTP400 Basic Panel Starter Kit
6AV6651-7DA01-3AA4	Package 4: SIMATIC S7-1200 + KTP700 Basic Panel Starter Kit
6ES7212-1HF41-4YB0	Package 5: SIMATIC S7-1200 F-CPU Starter Kit + F-DI and F-DQ Signal Module

POWER SUPPLIES



PART NUMBER	INPUT VOLTAGE	INPUT CURRENT	OUTPUT VOLTAGE	OUTPUT CURRENT
SITOP Smart Single Phase				
6EP1332-2BA20	120/230VAC 85....132VAC 170....264VAC	1.25A@ 120V, 0.74A@230V	24VDC +/- 3% Adjustment range 22.8 ... 28 V DC	2.5A
6EP1333-2BA20		2.3A@ 120V, 1.36A@230V		5A
6EP1334-2BA20		4.49A@ 120V, 1.91A@230V		10A
6EP1336-2BA10		7.5A@ 120V, 3.5A@230V		20A
6EP1322-2BA00		1.73A@ 120V, 0.99A@230V	12VDC 11.5...15.5 V DC	7A
6EP1323-2BA00		3.24A@ 120V, 1.41A@230V		14A
SITOP Smart Three phase				
6EP1433-2BA20	400-500 VAC 340....550VAC 170....264VAC	0.45A @ 400V	24VDC +/- 3% Adjustment range 22.8 ... 28 V DC	2.5A
6EP1434-2BA20		0.7A @ 400V		5A
6EP1436-2BA10		1.2A @ 400V		10A
6EP1437-2BA20		2.0A @ 400V		20A
SITOP Modular Single and Two phase				
6EP1333-3BA10	120-230VAC Single Phase 230-500VAC Two Phase	1.25A@ 120V, 0.74A@230V	24VDC +/- 3% Adjustment range 22.8 ... 28 V DC	5A
6EP1334-3BA10		2.3A@ 120V, 1.36A@230V		10A
6EP1336-3BA10	120/230VAC 85....132VAC 170....264VAC	4.49A@ 120V, 1.91A@230V		20A
6EP3337-8SB00-0AY0		7.5A@ 120V, 3.5A@230V		40A
SITOP Modular Three phase				
6EP3436-8SB00-0AY0	Three phase 400-500 V 3 AC 320....575 V 3 AC	1.2A @ 400V	24VDC +/- 3% Adjustment range 22.8 ... 28 V DC	20A
6EP3437-8SB00-0AY0		2.6A @ 400V		40A

ACCESSORIES

PART NUMBER	INPUT VOLTAGE	DESCRIPTION	OUTPUT VOLTAGE	OUTPUT CURRENT
Diode redundancy modules				
6EP1964-2BA00	24 V DC 19....29VDC	PSE202U 10A Redundancy module	24VDC	2 x 5A 10A Total
6EP1961-3BA21		PSE202U 40A Redundancy module	24VDC	2 x 20A 40A Total
Selectivity module				
6EP1961-2BA11	24 V DC 22....30VDC	Distributing the 24V supply over up to 4 load circuits and their monitoring for overload - selective shutdown of faulty load circuits. Remote reset with 24V signal and reset via pushbutton per channel. Common signaling channel	24VDC	4 x 3A
6EP1961-2BA21				4 x 10A
6EP1961-2BA31		Distributing the 24V supply over up to 4 load circuits and their monitoring for overload - selective shutdown of faulty load circuits. Remote reset with 24V signal and reset via pushbutton per channel. Single channel signaling		4 x 3A
6EP1961-2BA41				4 x 10A

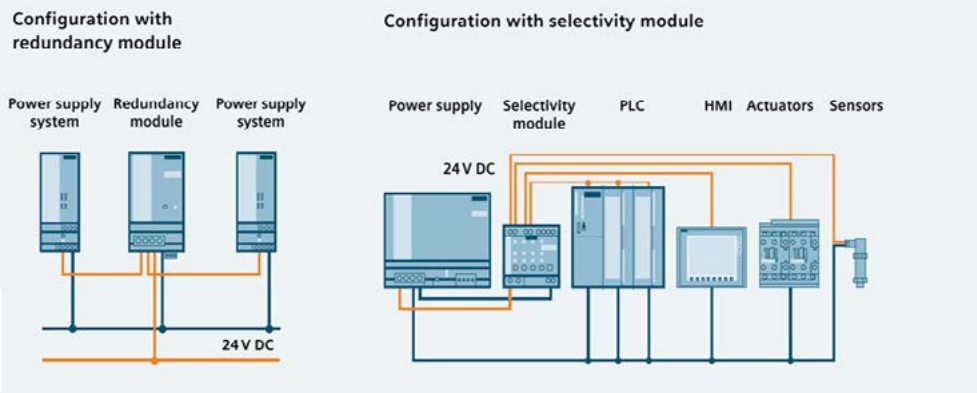

OUR LOCATIONS

National footprint with strategic local stockholdings.

APS Industrial is headquartered in Melbourne and in addition has a national network of offices in Adelaide, Perth, Sydney, Brisbane and Tasmania supported by strategic local stockholdings and expert technical and application knowledge.

apsindustrial.com.au

CONNECT WITH US

MELBOURNE

5-7 Corporate Ave,
Rowville, Melbourne VIC 3178

Ph: (03) 8514 3500
Sales: 1300 309 303
Email: vic@apsindustrial.com.au

SYDNEY

Unit P1, 10-16 South Street
Rydalmere, Sydney NSW 2116

Ph: (02) 8898 6200
Sales: 1300 309 303
Email: nsw@apsindustrial.com.au

BRISBANE

49 Borthwick Avenue,
Murarrie, Brisbane, QLD, 4172

Ph: (07) 3063 3100
Sales: 1300 309 303
Email: qld@apsindustrial.com.au

ADELAIDE

159-163 Caulfield Ave,
Clarence Gardens SA 5039

Ph: (08) 8111 5100
Sales: 1300 309 303
Email: sa@apsindustrial.com.au

PERTH

5 Glyde Court, Malaga,
Malaga, Perth WA 6090

Ph: (08) 6118 5300
Sales: 1300 309 303
Email: wa@apsindustrial.com.au

6-D0000 202111