SIEMENS

Data sheet 8US1211-4TM00

Busbar system Busbar center-to-center spacing 60 mm Device adapter, Width: 72 mm Bar thickness: 5.10 mm+TT profile for equipment with circuit breaker SIRIUS Size S3 (100 A) Length 182 mm Operating range 480-690 V

Model	
product brand name	SENTRON
Product designation	Device adapter
Design of the product	Accessories
Operating current / at AC / rated value	100 A
Operating voltage / at AC / rated value	690 V
suitability for use	SIRIUS S3 (100 A)

Connections	
Type of connectable conductor cross-sections / for copper conductor / stranded	AWG 4

Mechanical Design	
Width	72 mm
length	182 mm
Busbar center-to-center spacing	60 mm
net weight	476 g

Certificates

General Product Approval			Declaration of Conformity	Test Certificates	
CSA	UR	EAC	EG-Konf.	Special Test Certificate	Miscellaneous

Shipping Approval			other
ABS	PRS	RINA	Miscellaneous

Further information

Information- and Downloadcenter (Catalogs, Brochures,…)
http://www.siemens.com/lowvoltage/catalogs

Industry Mall (Online ordering system)
https://mall.industry.siemens.com/mall/en/en/Catalog/product?mlfb=8US1211-4TM00

Subject to change without notice
© Copyright Siemens

Service&Support (Manuals, Certificates, Characteristics, FAQs,...)
https://support.industry.siemens.com/cs/ww/en/ps/8US1211-4TM00

Image database (product images, 2D dimension drawings, 3D models, device circuit diagrams, ...)
http://www.automation.siemens.com/bilddb/cax_en.aspx?mlfb=8US1211-4TM00

CAx-Online-Generator
http://www.siemens.com/cax

Tender specifications
http://www.siemens.com/specifications

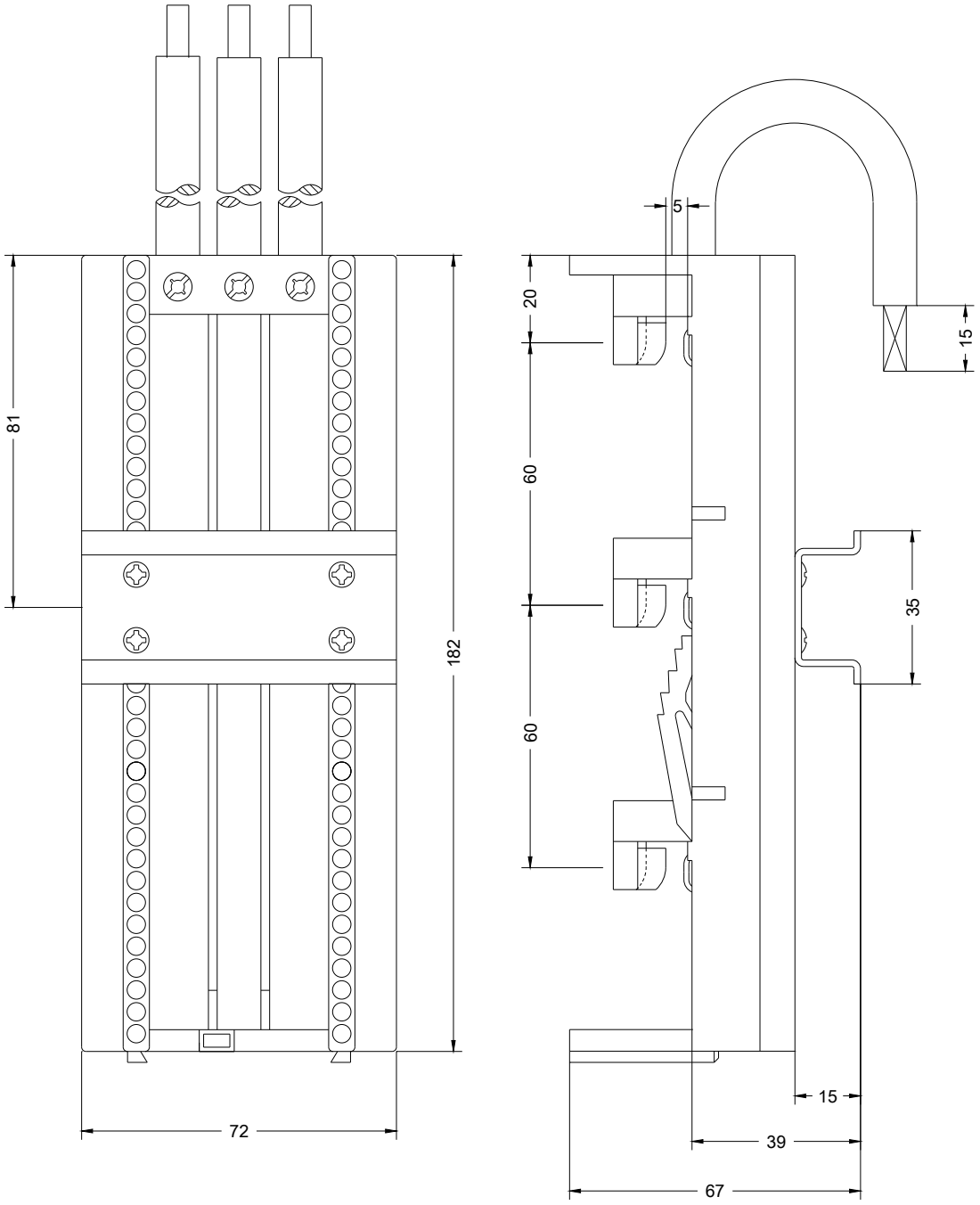

Subject to change without notice
© Copyright Siemens