QS Breaker[1]

PowerMod's core offering of residential Meter Stacks, type WMM, offers the widest product offering & flexibility in the industry. Each meter stack houses the QuickSystem features to maximize productivity and minimize labor costs. To further simplify installation, our 225 Amp meter stacks feature the QS breaker. The QS breaker adds to the Siemens exclusive feature set in our Power Mod product line. Benefits and part numbers include:

- An exclusive side wired design saves wiring space and eliminates difficult "S bends"
- No need for costly filler plates — QS 225 Amp breaker takes the same space as standard 100 Amp QPs
- Single right hand bend wiring - saves time and wire
- Provides 100K AIC flexibility from 100 up to 225 Amps
- 10K to 100K AIC Series Rating

QS Breaker

Breaker Type	QS	QSH	QSHH	HQS	HQSH
Amperage	10K AIC	22K AIC	42K AIC	65K AIC	100K AIC
100	QS2100	QS2100H	QSH2100	QS2100HH	HQS2100H
110	QS2110	QS2110H	QSH2110	QS2110HH	HQS2110H
125	QS2125	QS2125H	QSH2125	QS2125HH	HQS2125H
150	QS2150	QS2150H	QSH2150	QS2150HH	HQS2150H
175	QS2175	QS2175H	QSH2175	QS2175HH	HQS2175H
200	QS2200	QS2200H	QSH2200	QS2200HH	HQS2200H
225	QS2225	QS2225H	QSH2225	QS2225HH	HQS2225H

QS Breaker Dimension Drawing

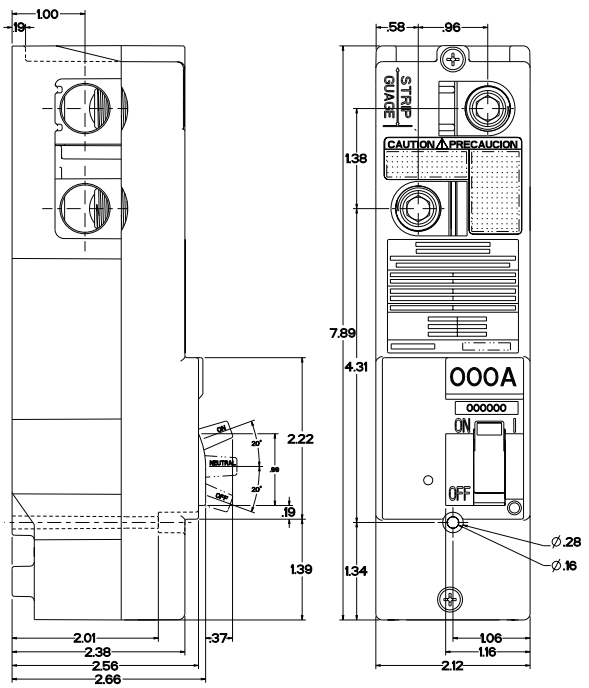

Front View





[1] For PowerMod information, please refer to Section 2, page 2-49