SIEMENS

Data Sheet

VBII General Duty Safety Switch

30A 240V, Type 3R, Non-Fusible

usa.siemens.com/switches

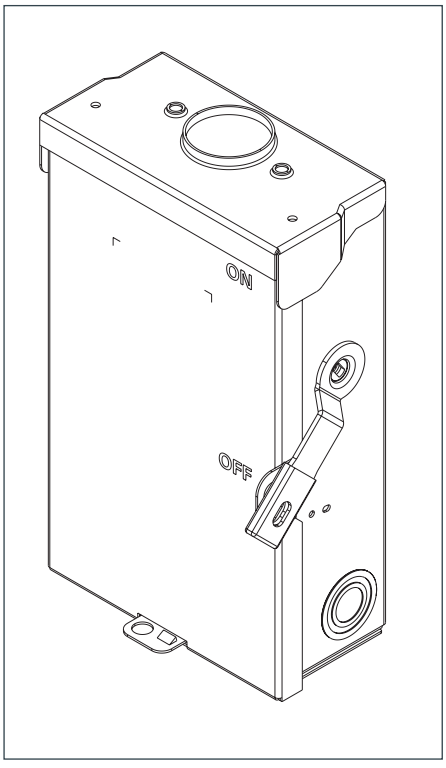

Note: Image is representative only, refer to dimensional drawing for details.

Standards and Ratings

- UL Listed under file #E4776
- Meets UL98 for switches and UL 50 for enclosures
- Meets NEMA Standard KS-1 for enclosed switches
- Meets NEC wire bending space requirements

Features

- Rated 10,000 AIC when protected by Class K fuses or H fuses or rated 100,000 AIC when protected by Class R fuses
- Quick-make and break switching action
- Double break visible blade design
- Easy to wire lay-in ground lug included (factory installed)
- Oversized lugs

Product Specifications

General Duty 30A, 240V, Type 3R

General Information

Catalog Number	Amps	Volts	Description	Shipping Weight (lbs.) [1]
GNF221RLLZA	30	240	2 Pole, Non-Fusible	20

Horsepower Ratings – 240 Volts

Catalog Number	1 Phase, 240V AC	3 Phase, 240V AC	250V DC
GNF221RLLZA	3	N/A	5

Mechanical Lug Wire Range[2]

Description	Wire Range with Wire Bending Space per NEC Requirements	Lug Wire Range
Line and Load Terminals	#14-6 AWG	#14-2 AWG

1 Package of 5.
2 See "Wire Torque Information" table for specific wire torque values.
3 Use closure plate screws provided to mount hubs.
4 Use Cu/Al 60°/75° C Wire.

Accessories and Hub Kits

Catalog Number	Description
ECHA075 [3]	0.75" Type "HA" Outdoor Hub
ECHA100 [3]	1.00 " Type "HA" Outdoor Hub
ECHA125 [3]	1.25 " Type "HA" Outdoor Hub

Wire Torque Information

Application	Wire Size	Nominal Torque
Mechanical Lug Wire Connector [4]	14 -10 AWG	35 lb.-in.
	8 AWG	40 lb.-in.
	6 AWG	45 lb.-in.

Dimension Drawings

General Duty 30A, 240V, Type 3R

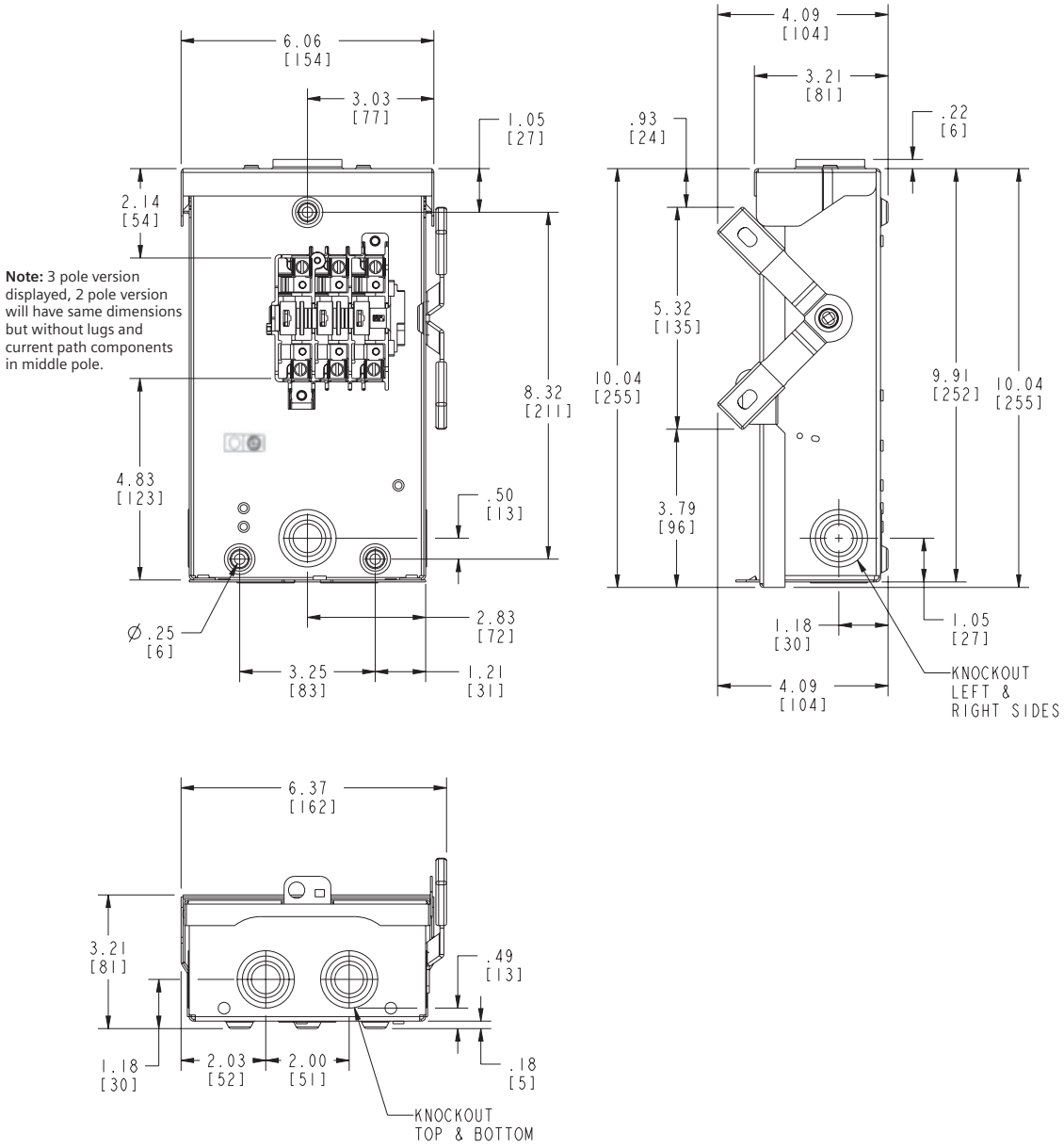

No knockouts in enclosures.
Dimensions shown in inches and millimeters ( ).
Dimension shown accurate to ± ⅛ inch.

KNOCKOUT CODE	CONDUIT SIZE
A (Concentric)	.50 .75 1.00

LINE SIDE WIRE BEND	LOAD SIDE WIRE BEND
2"	2"

Enclosure: Cold Rolled Steel
0.45 Thick (17 Gauge)
Finish: ANSI #61 Grey Paint

Published by
Siemens Industry, Inc. 2022.

Siemens Industry, Inc.
3617 Parkway Ln
Peachtree Corners, GA 30092

For more information, please contact our Customer Support Center.
Phone: 1-800-241-4453
E-mail: info.ipc.us@siemens.com
info.hmi.us@siemens.com

usa.siemens.com/switches

Order No.: SSDS-GZ221R-1022
Printed in U.S.A.
© 2022 Siemens Industry, Inc.

The technical data presented in this document is based on an actual case or on as-designed parameters, and therefore should not be relied upon for any specific application and does not constitute a performance guarantee for any projects. Actual results are dependent on variable conditions. Accordingly, Siemens does not make representations, warranties, or assurances as to the accuracy, currency or completeness of the content contained herein. If requested, we will provide specific technical data or specifications with respect to any customer's particular applications. Our company is constantly involved in engineering and development. For that reason, we reserve the right to modify, at any time, the technology and product specifications contained herein.